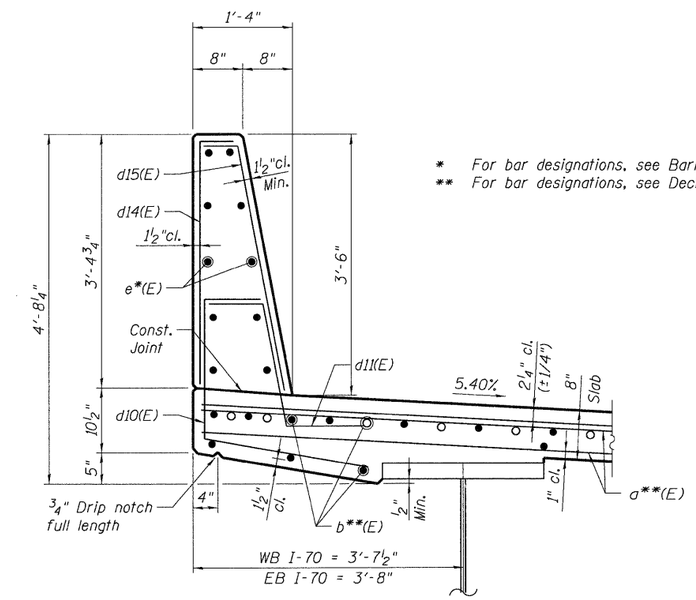

* For bar designations, see Barrier Curb Elevations.
** For bar designations, see Deck Plans.

NORTH BARRIER CURB DETAIL

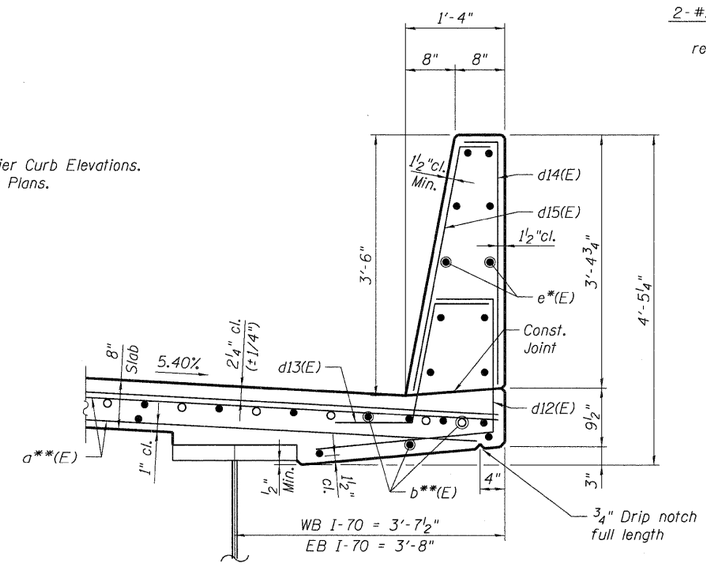

SOUTH BARRIER CURB DETAIL

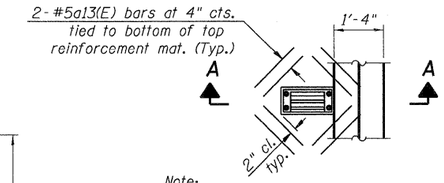

Note:
Cut longitudinal reinforcement to clear drainage scuppers.

PLAN

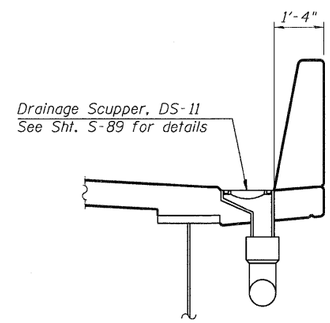

SECTION A-A

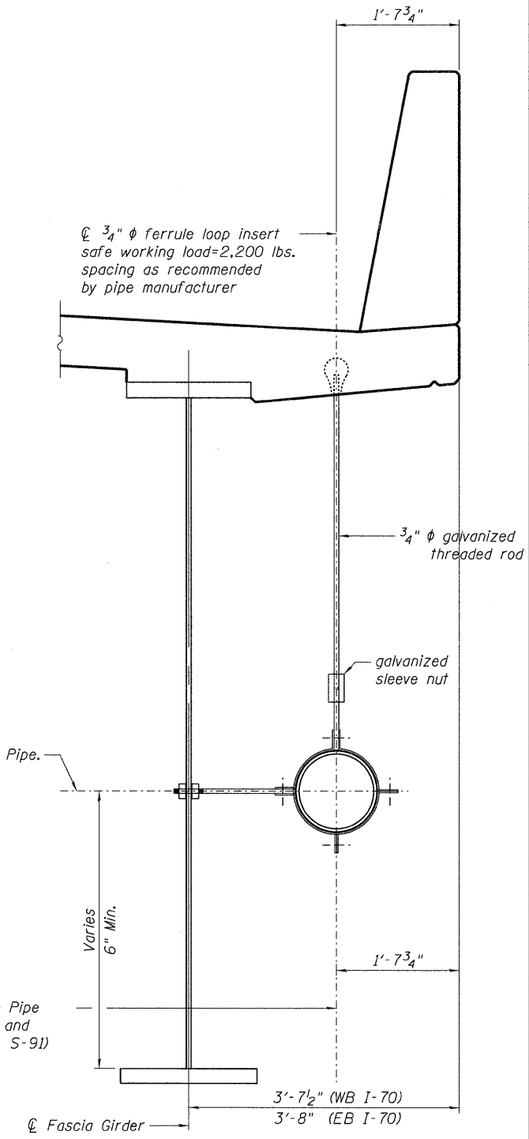

PIPE HANGER DETAIL

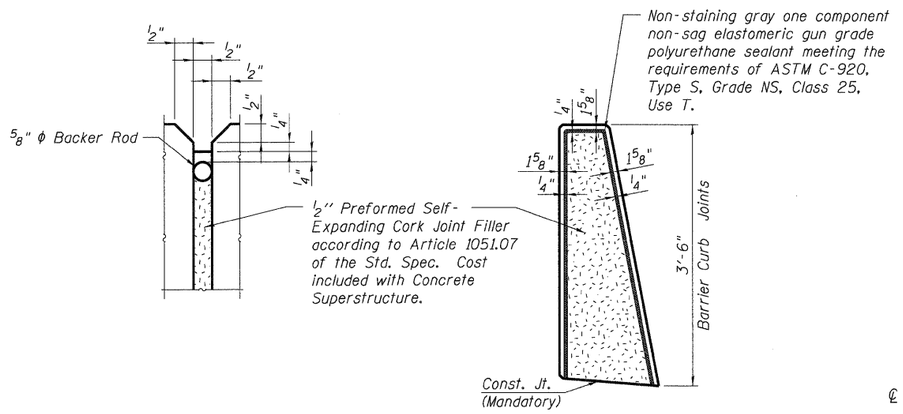

BARRIER CURB JOINT DETAILS

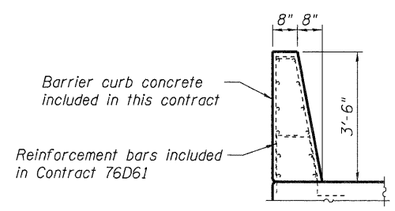

SECTION B-B

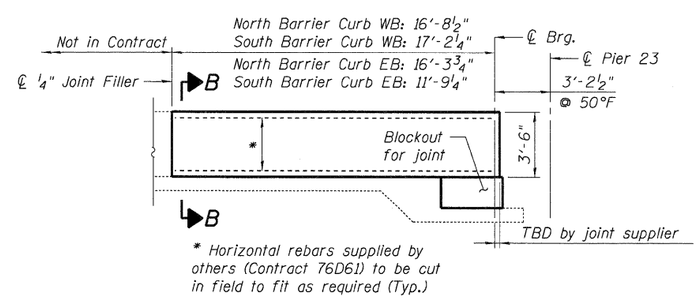

* Horizontal rebars supplied by others (Contract 76D61) to be cut in field to fit as required (Typ.)

BARRIER ELEVATION

(Barrier at Pier 23, west of Exp. Joint)

NOTE:
Work this sheet with Shts. S-22 thru S-47.

FILE NAME = $FILEL$	USER NAME = $USER$	DESIGNED - JLR	REVISED -	STATE OF ILLINOIS DEPARTMENT OF TRANSPORTATION I-70 CONNECTION OVER NS, TRRA, MCT AND INDUSTRIAL DR.	DECK DETAILS	F.A.P. RTE.	SECTION	COUNTY	TOTAL SHEETS / SHEET NO.
		DRAWN - FD	REVISED -			998	82-2-1HVB	ST. CLAIR	285 / 152
TENG & ASSOCIATES, INC. ENGINEERS/ARCHITECTS/PLANNERS CHICAGO, ILLINOIS	PLOT SCALE = $SCALE$	CHECKED - TCU	REVISED -			SN 082-0318 (EB) & 0319 (WB)		CONTRACT NO. 76C44	
	PLOT DATE = $DATE$	DATE - 06/04/10	REVISED -		SCALE: SHEET NO. S-42 OF S-111 STA. 134+22.00 TO STA.	FED. ROAD DIST. NO.	ILLINOIS	FED. AID PROJECT	

\082Z0318-CONN-05-001-SLIDGN, \082Z0318-CONN-05-001-SLIDGN, \082Z0318-CONN-09-001-SLIDGN, \082Z0318-CONN-05-001-SLIDGN, \082Z0318-CONN-05-001-SLIDGN
6-23-2010, 18:41:10 BDNCHJJD \\VS-0014\VAULT\I-70 TRRA\07-2222-2086B-001\STRUCTURAL\DETAILS\DESIGN\082Z0318 DESIGN SHEET\082Z0318-CONN-05-111-SHT-SLIDGN