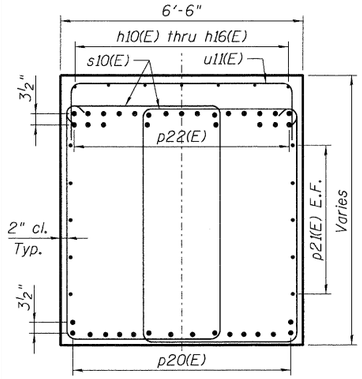

SECTION A-A

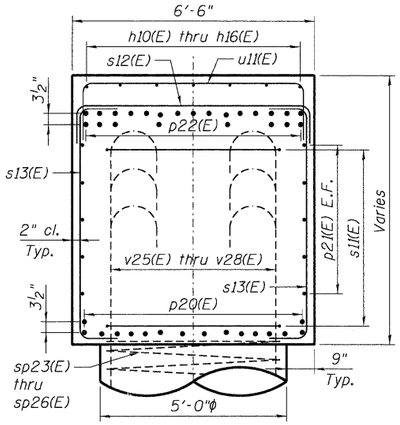

SECTION B-B

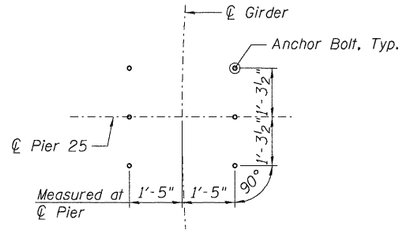

ANCHOR BOLT LAYOUT

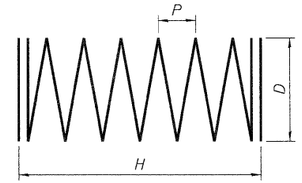

sp20 thru sp26(E) Bars

Bar	H	D	P	Length*
sp20	56'-1"	5'-10"	6"	2,088'
sp21	45'-10"	5'-10"	3"	3,379'
sp22(E)	15'-0"	4'-8"	4"	695'
sp23(E)	37'-11"	4'-8"	4"	1,689'
sp24(E)	37'-0"	4'-8"	4"	1,649'
sp25(E)	36'-1"	4'-8"	4"	1,610'
sp26(E)	35'-3"	4'-8"	4"	1,574'

* For Information Only - length calculated as continuous bar (ignoring splices).

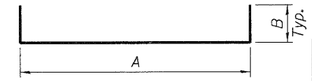

h10(E), h13(E), s12(E), s13(E), u10(E), u11(E) Bars

Bar	A	B	Length
h10(E)	8'-6"	1'-6"	11'-6"
h13(E)	7'-11"	1'-6"	10'-11"
s12(E)	6'-2"	1'-0"	8'-2"
s13(E)	6'-2"	1'-0"	8'-2"
u10(E)	6'-0"	7'-9"	21'-6"
u11(E)	6'-2"	1'-6"	9'-2"

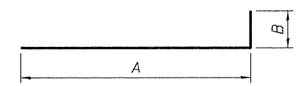

h11(E), h14(E), h16(E), p20(E), p22(E) Bars

Bar	A	B	Length
h11(E)	8'-5"	1'-6"	9'-11"
h14(E)	10'-2"	1'-6"	11'-8"
h16(E)	11'-1"	1'-6"	12'-7"
p20(E)	51'-0"	2'-0"	53'-0"
p22(E)	51'-10"	2'-0"	53'-10"

PIER 25 BAR LIST

Bar	No.	Size	Length	Shape
h10(E)	7	#6	11'-6"	
h11(E)	28	#6	9'-11"	
h12(E)	7	#6	10'-4"	
h13(E)	7	#6	10'-11"	
h14(E)	21	#6	11'-8"	
h16(E)	7	#6	12'-7"	
p20(E)	32	#11	53'-0"	
p21(E)	20	#8	48'-2"	
p22(E)	46	#11	53'-10"	
s10(E)	286	#6	21'-11"	
s11(E)	84	#6	16'-8"	
s12(E)	36	#6	8'-2"	
s13(E)	72	#6	8'-2"	
sp20	4	#6	56'-1"	*
sp21	4	#6	45'-10"	*
sp22(E)	4	#6	15'-0"	*
sp23(E)	1	#6	37'-11"	*
sp24(E)	1	#6	37'-0"	*
sp25(E)	1	#6	36'-1"	*
sp26(E)	1	#6	35'-3"	*
u10(E)	10	#8	21'-6"	
u11(E)	100	#6	9'-2"	
v20	88	#14	49'-11"	
v21	88	#14	52'-0"	
v1	88	#14	38'-10"	
v2(E)	36	#11	10'-6"	
v3(E)	36	#11	12'-6"	
v4(E)	72	#11	14'-6"	
v25(E)	18	#11	47'-7"	
v26(E)	18	#11	46'-8"	
v27(E)	18	#11	45'-9"	
v28(E)	18	#11	44'-11"	
v5(E)	72	#11	13'-10"	

* Length is height of spiral

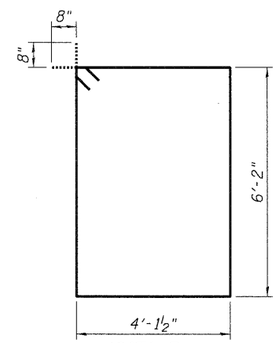

s10(E) Bars

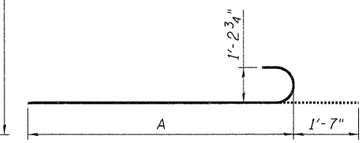

v25(E) - v28(E) & v5(E) Bars

Bar	A	Length
v25(E)	46'-0"	47'-7"
v26(E)	45'-1"	46'-8"
v27(E)	44'-2"	45'-9"
v28(E)	43'-4"	44'-11"
v5(E)	12'-3"	13'-10"

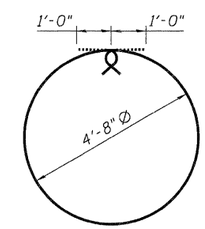

s11(E) Bars

PIER 25 BILL OF MATERIAL

Item	Unit	Total
Structure Excavation	Cu. Yd.	101
Concrete Structures	Cu. Yd.	284.5
Reinforcement Bars	Pound	127,590
Reinforcement Bars, Epoxy Coated	Pound	87,680
Permanent Casing	Foot	398
Drilled Shaft in Soil	Cu. Yd.	489
Drilled Shaft in Rock	Cu. Yd.	13
Mechanical Splicers	Each	160
Crosshole Sonic Logging	Each	1

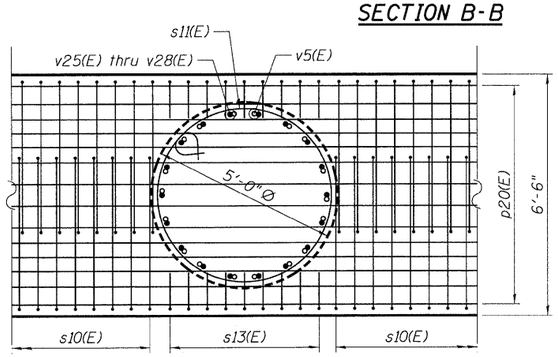

SECTION C-C

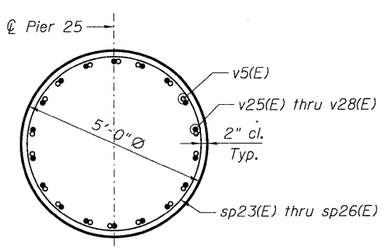

SECTION D-D

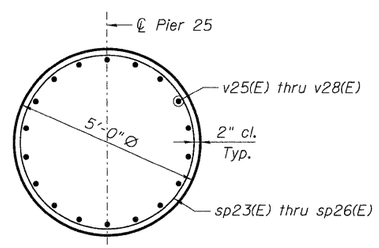

SECTION E-E

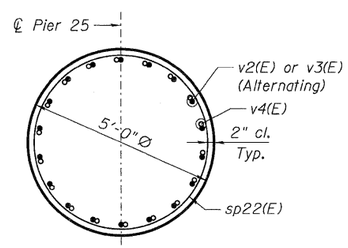

SECTION F-F

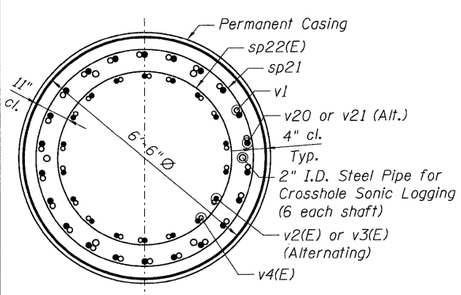

SECTION G-G

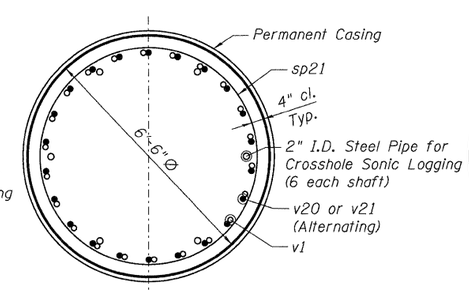

SECTION H-H

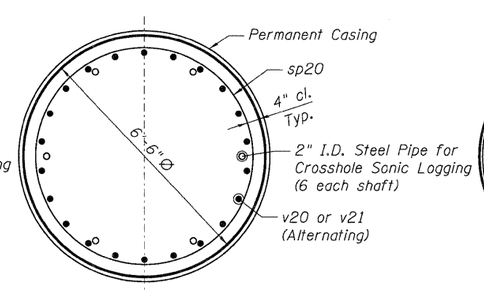

SECTION J-J

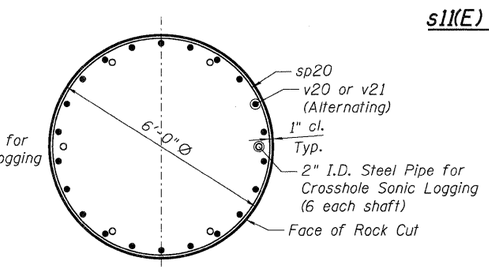

SECTION K-K

NOTES:

1. Work this sheet with Sht. S-82.
2. The quantities and reinforcement detailing shown are based on the top of shaft and estimated top of rock elevations shown and may change based on the actual elevations encountered at each shaft.
3. The cost of steel pipes, pipe caps and couplers for crosshole sonic logging shall be included in Drilled Shaft in Soil and Drilled Shaft in Rock.
4. v(E) bars in columns shall be placed as shown to provide space for p20(E) bars in cap.
5. For Anchor Bolt and bearing details, see Sht. S-74.