7-30-10 LETTING ITEM 080

| ROUTE NO. | SECTION | CITY | TOTAL SHEETS | SHEET NO. |
|---|---|---|---|---|
| | 05-00001-00-RP | OREANA | 46 | 1 |
| FED. ROAD DIST. NO. | | ILLINOIS | PROJECT HPP-0913 (001) | |

CONTRACT NUMBER 95537

STATE OF ILLINOIS
DEPARTMENT OF TRANSPORTATION

# PLANS FOR PROPOSED LOCAL AGENCY IMPROVEMENT FEDERAL AID URBAN PROJECT

SCALES
PLAN 1" = 20'
PROFILE HOR. 1" = 20'
PROFILE VERT. 1 = 2'
CROSS SECTIONS HOR. 1" = 5'
VERT. 1" = 2'

# VILLAGE OF OREANA, ILLINOIS

# SAFETEA-LU PROJECT

## SECTION 05-00001-00-RP
## PROJECT HPP-0913 (001)
## C -97-033-08
## MACON COUNTY, ILLINOIS

UTILITIES

| | | |
|---|---|---|
| AMEREN IP<br>500 S. 27TH STREET<br>DECATUR, IL 62521 | GAS AND ELECTRIC | 800-892-7715 |
| SBC<br>990 SOUTHSIDE DRIVE<br>DECATUR, IL 62521 | TELEPHONE POLES, BOXES AND CABLES | 217-429-8596 |
| COMCAST<br>1275 N. WATER STREET<br>DECATUR, IL 62521 | POLES, BOXES AND CABLES | 217-424-8474 |
| VILLAGE OF OREANA<br>600 N. EAST ST.<br>OREANA, IL 62554 | STREET AND WATER DEPT. | 217-468-2112 |

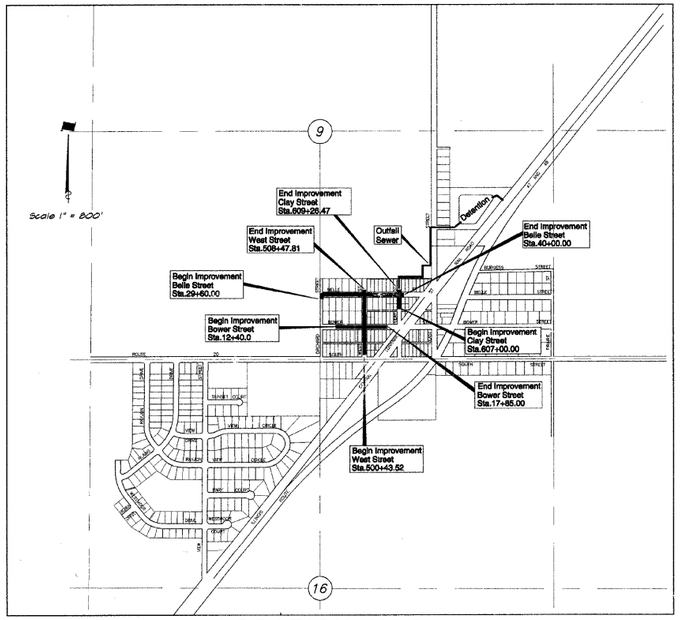


LOCATION MAP
TOTAL LENGTH OF PROJECT = 2534.78 FEET = 0.480 MILES
NET LENGTH OF PROJECT = 2534.78 FEET = 0.480 MILES

DESIGN DESIGNATION
0045 (2018) LOCAL 0.077 (PCC - 20)
DESIGN SPEED = 25 MPH
ADT (2018) = 400 PC=348 S U=50 MV=2

IDOT STANDARDS

| | |
|---|---|
| 280001-05 | Temporary Erosion Control Systems |
| 420001-07 | Pavement Joints |
| 420101-04 | 24' Jointed PCC Pavement |
| 424001-05 | Curb Ramps for Sidewalks |
| 542301-02 | Precast Reinforced Concrete Flared End Section |
| 602301-02 | Inlet, Type A |
| 602401-02 | Manhole, Type A |
| 602406-03 | Manhole, Type A - 6' Diameter |
| 602411-01 | Manhole, Type A - 7' Diameter |
| 602416-01 | Manhole, Type A - 8' Diameter |
| 602421-01 | Manhole, Type A - 9' Diameter |
| 602601-02 | Precast Reinforced Concrete Flat Slab Top |
| 604001-03 | Frames and lids, Type 1 |
| 606001-04 | Concrete Curb and Combination Concrete Curb and Gutter |
| 664001-02 | Chain Link Fence |
| 701901-01 | Traffic Control Devices |
| 780001-02 | Typical Pavement Markings |
| BLR22-6 | Typical Application of Traffic Control Devices for Construction on Rural Local Highways |


BAINBRIDGE - GEE - MILANSKI & ASSOC., INC.
1670 S. TAYLORVILLE RD.
DECATUR, ILLINOIS 62521
TELE: (217) 423-8600


INDEX TO SHEETS
SEE SHEET NO. 2

NOTE

Underground facilities, structures and utilities have been plotted from available surveys and records and their locations must be considered approximate only. There may be others, the existence of which is presently not known. The depth of utilities is assumed to be normal and customary. Contractor shall verify location and depth of all utilities prior to construction.

IT'S THE LAW IN ILLINOIS
PRIOR TO COMMENCING ANY CONSTRUCTION OR EXCAVATION, THE CONTRACTOR SHALL VERIFY THE LOCATION OF ALL UTILITIES BY CALLING:
J.U.L.I.E.* 1-800-892-0123

* Joint Utilities Locating Information for Excavators.

0 20 40 PLAN
0 20 40 PROFILE HORIZONTAL
0 2 4 PROFILE VERTICAL
0 5 10 CROSS SECTION HORIZONTAL
0 2 4 CROSS SECTION VERTICAL

MICHAEL H. PRICE 31058 REGISTERED PROFESSIONAL ENGINEER OF ILLINOIS

by [signature]
date 6/15/2009
expires NOV.30, 2009

Rev. 4-21-2010

STATE OF ILLINOIS
DEPARTMENT OF TRANSPORTATION

Approved 4/21/2010
[signature]
Village of Oreana, President

Passed 6/7/10
[signature]
District 7 Engineer of Local Roads & Streets

Releasing for Bid Based on Limited Review 6/7/10
[signature]
Deputy Director of Highways, Region 4 Engineer

| ROUTE NO. | SECTION | CITY | TOTAL SHEETS | SHEET NO. |
|---|---|---|---|---|
| | 05-00000-01-RP | OREANA | 46 | 2 |
| FED. ROAD DIST. NO. | | ILLINOIS | PROJECT HPP-0913 (001) | |

**CONTRACT NUMBER 95537**

## INDEX TO SHEETS


| Sheet No. | |
|---|---|
| 1. | Cover Sheet |
| 2. | Index to Sheets - Summary of Quantities |
| 3. | Schedule of Quantities |
| 4. | Schedule of Quantities |
| 5. | Schedule of Quantities |
| 6. | Typical Sections - General Notes - Index to Sheets |
| 7. | Plan and Profile - West Street - Sta. 500+43.52 to 504+25.00 |
| 8. | Plan and Profile - West Street - Sta. 504+25.00 to 508+47.81 |
| 9. | Plan and Profile - Clay Street - Sta. 605+25.00 to 608+26.47 |
| 10. | Plan and Profile - Boner Street - Sta. 10+00.00 to 14+70.00 |
| 11. | Plan and Profile - Boner Street - Sta. 14+70.00 to 19+95.00 |
| 12. | Plan and Profile - Belle Street - Sta. 30+00.00 to 34+50.00 |
| 13. | Plan and Profile - Belle Street - Sta. 34+50.00 to 40+00.00 |
| 14. | Plan of Outfall Sewer - Sta. 604+00 Clay St. - Sta. 5+36.5 |
| 15. | Plan of Outfall Sewer - Sta. 5+36.5 - Sta. 11+33.0 |
| 16. | Plan of Outfall Sewer - Sta. 11+33.0 - Sta. 14+58.0 |
| 17. | Plan of Detention Pond & Outlet Pipe |
| 18. | Storm Sewer Profiles - West Street |
| 19. | Storm Sewer Profiles - Clay and Boner Street |
| 20. | Storm Sewer Profiles - Belle Street |
| 21. | Storm Sewer Profiles - Outfall Sewer |
| 22. | Adjusting Water Main Details |
| 23. | Traffic Control Plan |
| 24. | Erosion Control Plan |
| 25. | Pavement Jointing Details |
| 26. | Pavement Marking and Signing Details |
| 27. | Miscellaneous Details |
| 28. | Miscellaneous Details |
| 29. | Strip Map |
| 30. | Cross Sections - West Street - Sta. 500+43.52 to 501+90.83 |
| 31. | Cross Sections - West Street - Sta. 502+13.0 to 504+21.27 |
| 32. | Cross Sections - West Street - Sta. 504+50.0 to 506+00.0 |
| 33. | Cross Sections - West Street - Sta. 506+43.0 to 508+47.81 |
| 34. | Cross Sections - Clay Street - Sta. 601+00.00 to 601+91.30 |
| 35. | Cross Sections - Clay Street - Sta. 602+33.14 to 604+26.47 |
| 36. | Cross Sections - Boner Street - Sta. 12+50.00 to 13+50.00 |
| 37. | Cross Sections - Boner Street - Sta. 13+97.50 to 15+28.55 |
| 38. | Cross Sections - Boner Street - Sta. 15+58.40 to 17+03.00 |
| 39. | Cross Sections - Boner Street - Sta. 17+35.00 to 17+85.00 |
| 40. | Cross Sections - Belle Street - Sta. 29+60.00 to 30+16.5 |
| 41. | Cross Sections - Belle Street - Sta. 31+26.50 to 32+50.00 |
| 42. | Cross Sections - Belle Street - Sta. 33+16.50 to 33+45.00 |
| 43. | Cross Sections - Belle Street - Sta. 34+50.0 to 35+28.98 |
| 44. | Cross Sections - Belle Street - Sta. 35+58.97 to 36+40.00 |
| 45. | Cross Sections - Belle Street - Sta. 37+17.50 to 38+50.00 |
| 46. | Cross Sections - Belle Street - Sta. 38+82.24 to 40+00.00 |


## SUMMARY OF QUANTITIES

| | Code | Quantity | Unit | Item |
|---|---|---|---|---|
| | 20100110 | 84 | UNIT | Tree Removal (6 to 15 Units Diameter) |
| | 20100210 | 84 | UNIT | Tree Removal (Over 15 Units Diameter) |
| | 20200100 | 27040 | CU YD | Earth Excavation |
| | 20800250 | 1130 | CU YD | Trench Backfill, Special |
| | X2130010 | 280 | FOOT | Exploration Trench, Special |
| | 28000400 | 8.8 | ACRE | Seeding, Class I (Special) |
| | 28000250 | 880 | POUND | Temporary Erosion Control Seeding |
| | 28000400 | 401 | FOOT | Perimeter Erosion Barrier |
| | 28000500 | 34 | EACH | Inlet and Pipe Protection |
| | 35100800 | 7806 | SQ YD | Aggregate Base Course, Type A 4" |
| | 35100400 | 768 | SQ YD | Aggregate Base Course, Type A 5" |
| | 40200800 | 852 | SQ YD | Aggregate Surface Course, Type A 6" |
| | 40200800 | 200 | TON | Aggregate Surface Course, Type B |
| | 40800010 | 304 | GALLON | Bituminous Materials (Prime Coat) |
| | 40800080 | 85 | TON | Incidental Hot-Mix Asphalt Surfacing |
| | 42000200 | 6198 | SQ YD | Portland Cement Concrete Pavement 7" |
| | 42001300 | 8440 | SQ YD | Protective Coat |
| | 42300200 | 1111 | SQ YD | Portland Cement Concrete Driveway Pavement, 6 inch |
| | 42400100 | 5168 | SQ FT | Portland Cement Concrete Sidewalk 4 inch |
| | 42400300 | 2020 | SQ FT | Portland Cement Concete Sidewalk 6 inch |
| | 42400800 | 56 | SQ FT | Detectable Warnings |
| | 44000100 | 154 | SQ YD | Driveway Pavement Removal |
| | 44000500 | 10 | FOOT | Combination Curb and Gutter Removal |
| | 44000600 | 1652 | SQ FT | Sidewalk Removal |
| | 48100600 | 114 | SQ YD | Aggregate Shoulders, Type A 7" |
| | 50105210 | 503 | FOOT | PIPE CULVERT REMOVAL |
| | 54213664 | 1 | EACH | Precast Reinforced Concrete Flared End Sections24" |
| | 54213705 | 1 | EACH | Precast Reinforced Concrete Flared End Sections60" |
| | 550B0010 | 40 | FOOT | Storm Seners, Class B, Type 1 4" |
| | 550B0020 | 40 | FOOT | Storm Seners, Class B, Type 1 6" |
| | 550B0030 | 40 | FOOT | Storm Seners, Class B, Type 1 8" |
| | 550B0050 | 786 | FOOT | Storm Seners, Class B, Type 1 12" |
| | 550B0120 | 57 | FOOT | Storm Seners, Class B, Type 1 24" |
| | 550B0160 | 348 | FOOT | Storm Seners, Class B, Type 1 36" |
| | 550B0180 | 277 | FOOT | Storm Seners, Class B, Type 1 42" |
| | 550B0140 | 518 | FOOT | Storm Seners, Class B, Type 1 48" |
| | 550B0210 | 117 | FOOT | Storm Seners, Class B, Type 1 60" |
| | 550B0340 | 130 | FOOT | Storm Seners, Class B, Type 2 12" |
| | 550B0360 | 31 | FOOT | Storm Seners, Class B, Type 2 15" |
| | 550B0380 | 115 | FOOT | Storm Seners, Class B, Type 2 18" |
| | 550B0410 | 66 | FOOT | Storm Seners, Class B, Type 2 24" |
| | 550B0430 | 251 | FOOT | Storm Seners, Class B, Type 2 30" |
| | 550A4710 | 46 | FOOT | Storm Seners, Class A, Type 1 EQUIVALENT ROUND-SIZE 48" |
| | 550A4720 | 221 | FOOT | Storm Seners, Class A, Type 1 EQUIVALENT ROUND-SIZE 54" |
| | 550A4730 | 316 | FOOT | Storm Seners, Class A, Type 1 EQUIVALENT ROUND-SIZE 60" |
| * | 56104900 | 1 | EACH | Water Valves 6" |
| * | 56106200 | 84 | FOOT | Adjusting Water Main 4" |
| * | 56106300 | 178 | FOOT | Adjusting Water Main 6" |
| * | 56200300 | 62 | FOOT | Water Service Line 1" |
| * | 56400100 | 1 | EACH | Fire Hydrants to be Moved |
| | 56500100 | 6 | EACH | Domestic Water Vaults to be Moved |
| | 56500300 | 24 | EACH | Domestic Water Vaults to be Adjusted |
| | 60218400 | 8 | EACH | Manholes, Type A, 4'-Diameter, Type 1 Frame, Closed Lid |
| | 60223800 | 3 | EACH | Manholes, Type A, 6'-Diameter, Type 1 Frame, Closed Lid |
| | 60224446 | 3 | EACH | Manholes, Type A, 7'-Diameter, Type 1 Frame, Closed Lid |
| | 60242500 | 7 | EACH | Inlets, Special, No. 1 |
| | 60242600 | 12 | EACH | Inlets, Special, No. 2 |
| | 60242700 | 9 | EACH | Inlets, Special, No. 3 |
| | 60242800 | 4 | EACH | Inlets, Special, No. 4 |
| | 60242801 | 1 | EACH | Inlets, Special, No. 5 |
| | 60242802 | 3 | EACH | Inlets, Special, No. 6 |
| | 60242803 | 2 | EACH | Inlets, Special, No. 7 |
| | 60260400 | 1 | EACH | Inlets to be Adjusted with New Type 1 Frame, Closed Lid |
| | 60266600 | 5 | EACH | Valve Boxes to be Adjusted |
| | 60500040 | 2 | EACH | Removing Manholes |
| | 60500060 | 8 | EACH | Removing Inlets |
| | 60603800 | 14 | EACH | Gutter Outlet |
| | 60605200 | 4044 | FOOT | Combination Concrete Curb and Gutter, Type B-6.24 |
| | 61140200 | 182 | FOOT | Storm Seners, Special 12" |
| | 61140500 | 435 | FOOT | Storm Seners, Special 16" |
| | 61141500 | 66 | FOOT | Storm Seners, Special 42" |
| | 66300105 | 10 | TON | Calcium Chloride Applied |
| | 66410400 | 138 | FOOT | Chain Link Fence to be Removed and Re-Erected |
| | 67000500 | 7 | CAL MO | Engineer's Field Office, Type B |
| | 67100100 | 1 | L SUM | Mobilization |
| | 70101700 | 1 | L SUM | Traffic Control and Protection |
| * | 78008250 | 388 | FOOT | Polyurea Pavement Marking Type 1 - Line 6" |
| * | 78008250 | 60 | FOOT | Polyurea Pavement Marking Type 1 - Line 12" |
| | X6020088 | 3 | EACH | Manholes, Type A, 8'-Diameter, Type 1 Frame, Closed Lid |
| | X6020098 | 2 | EACH | Manholes, Type A, 9'-Diameter, Type 1 Frame, Closed Lid |
| | X6022110 | 4 | EACH | Manholes, Type A, 10'-Diameter, Type 1 Frame, Closed Lid |
| | XX003424 | 1 | EACH | Connect to Existing Structure |
| | 20048665 | 1 | L SUM | Railroad Protective Liability Insurance |
| | 20065745 | 160 | FOOT | Slotted Drain 12" with 2 1/2" Slot |
| | XX008393 | 1 | EACH | Storm Sewer Tap, 18" |
| | XX008394 | 1 | EACH | Storm Sewer Tap, 24" |
| | XX008395 | 27 | FOOT | 12" Schedule 20 Welded Steel Pipe w/ End Seals |

* Specialty Item

## TIES TO CONTROL POINTS

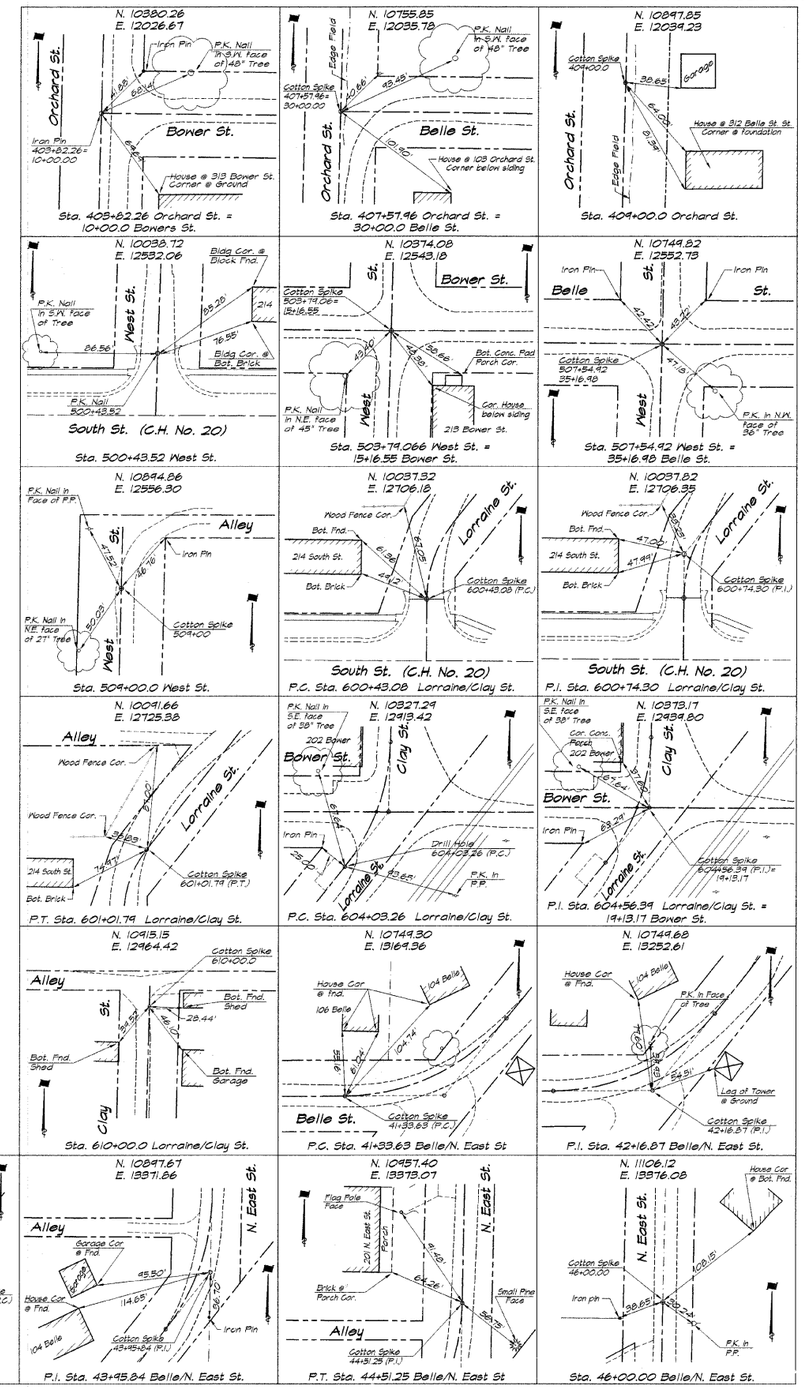


| REVISIONS | | | |
|---|---|---|---|
| NO. | BY | DATE | |
| 1 | MHP | 1-30-07 | |
| 2 | MHP | 4-7-07 | |
| 3 | MHP | 11-6-07 | |

| | | | |
|---|---|---|---|
| DESIGNED | MHP | SCALE | N/A |
| DRAWN | Lee Jenkins | DATE | Aug. 2006 |
| | | FIELD BOOK | XXX |
| | | JOB NO. | C6-040A |


BANBRIDGE & ASSOCIATES, INC.
Consulting Engineers
1670 SOUTH TAYLORVILLE ROAD
DECATUR ILLINOIS
Illinois License 184-001255


# VILLAGE OF OREANA, ILLINOIS

SAFE TEA-LU PROJECT

## INDEX TO SHEETS - SUMMARY OF QUANTITIES TIE POINTS

| ROUTE NO. | SECTION | CITY | TOTAL SHEETS | SHEET NO. |
|---|---|---|---|---|
| | 05-00001-00-RP | OREANA | 46 | 3 |
| FED. ROAD DIST. NO. | | ILLINOIS | PROJECT HPP-0913 (001) | |

**CONTRACT NUMBER 95537**

## EARTHWORK SCHEDULE

| Location | 20200100 Earth Excavation Cu Yd | Earth Excav. Adj. for 25% Shrink Cu Yd | Embankment Cu Yd | Earth Balance Waste (+) Shortage (-) Cu Yd |
|---|---|---|---|---|
| **West Street** | | | | |
| 500+43.5 - 500+65.5 | 30 | 22 | 1 | +21 |
| 500+65.5 - 501+00.0 | 58 | 44 | 3 | +41 |
| 501.00+0 - 501+75.0 | 187 | 140 | 5 | +135 |
| 501+75.0 - 501+90.8 | 50 | 37 | 0 | +37 |
| 501+90.8 - 502+13.0 | 61 | 46 | 0 | +46 |
| 502+13.0 - 502+60.5 | 101 | 76 | 3 | +73 |
| 502+60.5 - 503+87.0 | 50 | 37 | 2 | +35 |
| 502+87.0 - 503+37.3 | 93 | 70 | 7 | +63 |
| 503+37.3 - 503+79.1 | 68 | 51 | 0 | +51 |
| 503+79.1 - 504+21.8 | 62 | 47 | 0 | +47 |
| 504+21.8 - 504+50.0 | 41 | 31 | 8 | +23 |
| 504+50.0 - 504+93.5 | 77 | 58 | 4 | +54 |
| 504+93.5 - 505+04.5 | 36 | 27 | 1 | +26 |
| 505+04.5 - 505+67.4 | 170 | 127 | 6 | +121 |
| 505+67.4 - 506+00.0 | 95 | 71 | 2 | +69 |
| 506+00.0 - 506+43.1 | 126 | 94 | 2 | +92 |
| 506+43.1 - 507+19.1 | 188 | 141 | 0 | +141 |
| 507+19.1 - 507+54.9 | 49 | 37 | 0 | +37 |
| 507+54.9 - 507+47.8 | 38 | 29 | 0 | +29 |
| 507+47.8 - 508+47.8 | 37 | 28 | 4 | +24 |
| SUBTOTAL | 1617 | 1213 | 48 | +1165 |
| **Clay Streets** | | | | |
| 607.00.0 - 607+50.0 | 41 | 52 | 3 | +28 |
| 607+50.0 - 607+82.5 | 52 | 39 | 2 | +37 |
| 607.82.5 - 607+91.3 | 18 | 13 | 0 | +13 |
| 607+91.3 - 608+33.1 | 62 | 47 | 0 | +47 |
| 608+33.1 - 608+76.5 | 54 | 40 | 0 | +40 |
| 608+76.5 - 609+00.0 | 28 | 17 | 2 | +15 |
| 609+00.0 - 609+26.5 | 17 | 13 | 2 | +11 |
| SUBTOTAL | 267 | 200 | 9 | +191 |
| **Boner Street** | | | | |
| 12+40.0 - 12+66.0 | 18 | 14 | 1 | +13 |
| 12+66.0 - 12+90.0 | 26 | 20 | 2 | +18 |
| 12+90.0 - 13+18.0 | 48 | 36 | 2 | +34 |
| 13+18.0 - 13+31.5 | 27 | 20 | 0 | +20 |
| 13+31.5 - 13+50.0 | 33 | 25 | 2 | +23 |
| 13+50.0 - 13+97.5 | 95 | 71 | 6 | +65 |
| 13+97.5 - 14+50.0 | 113 | 85 | 5 | +80 |
| 14+50.0 - 14+74.5 | 47 | 35 | 3 | +32 |
| 14+74.5 - 15+04.6 | 106 | 79 | 2 | +77 |
| 15+28.6 - 15+58.4 | 100 | 75 | 0 | +75 |
| 15+58.4 - 16+00.0 | 91 | 68 | 1 | +67 |
| 16+00.0 - 16+23.0 | 54 | 40 | 0 | +40 |
| 16+23.0 - 16+50.0 | 58 | 44 | 1 | +43 |
| 16+50.0 - 17+03.0 | 108 | 81 | 2 | +79 |
| 17+03.0 - 17+35.0 | 61 | 46 | 1 | +45 |
| 17+35.0 - 17+53.5 | 24 | 18 | 1 | +17 |
| 17+53.5 - 17+85.0 | 27 | 20 | 0 | +20 |
| SUBTOTAL | 1036 | 777 | 29 | +748 |
| **Belle Street** | | | | |
| 29+60.0 - 30+00.0 | 56 | 42 | 0 | +42 |
| 30+00.0 - 30+42.0 | 111 | 83 | 2 | +81 |
| 30+42.0 - 30+48.5 | 19 | 14 | 1 | +13 |
| 30+48.5 - 30+70.0 | 66 | 49 | 1 | +48 |
| 30+70.0 - 31+16.5 | 151 | 113 | 0 | +113 |
| 31+16.5 - 31+26.5 | 31 | 23 | 0 | +23 |
| 31+26.5 - 31+50.0 | 56 | 42 | 9 | +34 |
| 31+50.0 - 31+90.5 | 78 | 59 | 10 | +49 |
| 31+90.5 - 32+34.5 | 83 | 62 | 10 | +52 |
| 32+34.5 - 32+50.0 | 24 | 18 | 4 | +14 |
| 32+50.0 - 33+16.5 | 119 | 89 | 11 | +78 |
| 33+16.5 - 33+19.0 | 5 | 4 | 0 | + 4 |
| 33+19.0 - 33+50.0 | 56 | 42 | 5 | +37 |
| 33+50.0 - 33+90.5 | 80 | 60 | 7 | +53 |
| 33+90.5 - 33+95.0 | 11 | 8 | 0 | + 8 |
| 33+95.0 - 34+50.0 | 118 | 89 | 9 | +80 |
| 34+50.0 - 34+75.0 | 48 | 36 | 9 | +27 |
| 34+75.0 - 35+09.0 | 97 | 73 | 5 | +68 |
| 35+29.0 - 35+59.0 | 91 | 68 | 0 | +68 |
| 35+59.0 - 36+00.0 | 78 | 59 | 1 | +58 |
| 36+00.0 - 36+25.5 | 56 | 42 | 0 | +42 |
| 36+25.5 - 36+50.0 | 59 | 44 | 0 | +44 |
| 36+50.0 - 36+90.0 | 119 | 89 | 0 | +89 |
| 36+90.0 - 37+17.5 | 107 | 80 | 0 | +80 |
| 37+17.5 - 37+50.0 | 126 | 95 | 0 | +95 |
| 37+50.0 - 38+00.0 | 153 | 115 | 0 | +115 |
| 38+00.0 - 38+19.0 | 52 | 39 | 0 | +39 |
| 38+19.0 - 38+50.0 | 75 | 56 | 1 | +55 |
| 38+50.0 - 38+82.2 | 75 | 56 | 1 | +55 |
| 38+82.2 - 39+12.2 | 102 | 77 | 0 | +77 |
| 39+36.3 - 39+66.3 | 89 | 67 | 4 | +63 |
| 39+66.3 - 40+00.0 | 36 | 27 | 6 | +21 |
| SUBTOTAL | 2427 | 1820 | 90 | +1730 |
| **Detention Pond/Access Dr.** | 24613 | 18460 | 0 | +18460 |
| TOTAL | 27040 | 20280 | 90 | 20190 |

## P.C.C. SIDEWALK

| Location | 42400100 4-Inch Sq Ft | 42400300 6-Inch Sq Ft | 42400800 Detectable Warnings Sq Ft | 42001300 Prot Coat Sq Yd |
|---|---|---|---|---|
| **West Street** | | | | |
| Rt. 500+32.5 - Rt. 500+45.1 | 50 | — | — | — |
| Rt. 500+45.1 - Rt. 500+85.9 | — | 163 | — | 18 |
| Rt. 500+85.9 - Rt. 501+62.6 | 307 | — | — | — |
| Rt. 501+62.6 - Rt. 501+87.4 | — | 99 | — | 11 |
| Rt. 501+87.4 - Rt. 502+00.6 | 53 | — | — | — |
| Rt. 502+00.6 - Rt. 502+25.4 | — | 99 | — | 11 |
| Rt. 502+25.4 - Rt. 502+74.6 | 197 | — | — | — |
| Rt. 502+74.6 - Rt. 502+99.4 | — | 99 | — | 11 |
| Rt. 502+99.4 - Rt. 503+61.5 | 248 | — | 8 | — |
| Rt. 503+98.5 - Rt. 504+05.0 | 25 | — | 8 | — |
| Rt. 504+04.0 - Rt. 504+44.6 | 342 | — | — | — |
| Rt. 504+44.6 - Rt. 505+24.4 | — | 119 | — | 13 |
| Rt. 505+24.4 - Rt. 505+55.0 | 122 | — | — | — |
| Rt. 505+55.0 - RT. 505+83.0 | — | 126 | — | 14 |
| Rt. 505+83.0 - Rt. 507+38.0 | 619 | — | 8 | — |
| Rt. 507+74.5 - Rt. 507+80.5 | 22 | — | 8 | — |
| **Boner Street** | | | | |
| Lt. 13+09.0 - Lt. 13+34.4 | — | 102 | — | 11 |
| Lt. 13+34.4 - Lt. 13+80.6 | 185 | — | — | — |
| Lt. 13+80.6 - Lt. 14+12.4 | — | 127 | — | 14 |
| Lt. 14+12.4 - Lt. 14+99.0 | 347 | — | — | — |
| Lt. 15+35.5 - Lt. 15+42.0 | 33 | — | 8 | — |
| Lt. 15+46.0 - Lt. 16+35.0 | 356 | — | — | — |
| **Belle Street** | | | | |
| Lt. 30+57.5 - Lt. 30+65.5 | — | 113 | — | 13 |
| Lt. 30+64.4 - Lt. 31+09.1 | 179 | — | — | — |
| Lt. 31+09.1 - Lt. 31+43.9 | — | 139 | — | 15 |
| Lt. 31+43.9 - Lt. 31+75.4 | 126 | — | — | — |
| Lt. 31+75.4 - Lt. 32+05.7 | — | 121 | — | 13 |
| Lt. 32+05.7 - Lt. 33+03.4 | 391 | — | — | — |
| Lt. 33+03.4 - Lt. 33+34.7 | — | 125 | — | 14 |
| Lt. 33+34.7 - Lt. 33+78.1 | 174 | — | — | — |
| Lt. 33+78.1 - Lt. 34+02.9 | — | 99 | — | 11 |
| Lt. 34+02.9 - Lt. 34+55.5 | 210 | — | — | — |
| Lt. 34+55.5 - Lt. 34+91.5 | — | 144 | — | 17 |
| Lt. 34+41.5 - Lt. 35+99.0 | 38 | — | — | — |
| Lt. 35+36.0 - Lt. 35+46.5 | 41 | — | 8 | — |
| Rt. 35+46.5 - Rt. 36+15.1 | 266 | — | 8 | — |
| Rt. 36+15.1 - Rt. 36+37.9 | — | 99 | — | 11 |
| Rt. 36+37.9 - Rt. 37+05.1 | 269 | — | — | — |
| Rt. 37+05.1 - Rt. 37+29.9 | — | 99 | — | 11 |
| Rt. 37+29.9 - Rt. 38+00.6 | 283 | — | — | — |
| Rt. 38+00.6 - Rt. 38+37.4 | — | 147 | — | 16 |
| Rt. 38+37.4 - Rt. 39+00.0 | 250 | — | — | — |
| Lt. 39+49.0 - Lt. 39+50.0 | 39 | — | — | — |
| TOTALS | 5168 | 2020 | 56 | 224 |

## MISCELLANEOUS PAVING SCHEDULE

| Location | 35100400 Agg Bse Cse Type A 5" Sq Yd | 40200500 Agg Surf Cse Type A 6" Sq Yd | 40800010 Blt Mat'ls Prime Coat Gal | 40800050 Incld Hot-Mix Asph Surfacing Ton | 48100600 Agg Shlds Type A 7" Sq Yd |
|---|---|---|---|---|---|
| **West Street** | | | | | |
| Rt. 500+65.5 | — | 3 | — | — | — |
| Rt. 501+75.0 | — | 22 | — | — | — |
| Lt. 501+90.83 | — | 33 | — | — | — |
| Rt. 502+13.0 | — | 6 | — | — | — |
| Lt. 502+60.5 | — | 2 | — | — | — |
| Rt. 502+87.0 | — | 1 | — | — | — |
| Lt. 504+93.5 | — | 1 | — | — | — |
| Rt. 505+67.40 | — | 36 | — | — | — |
| Lt. 506+43.0 | — | 7 | — | — | — |
| CL 507+47.81 - CL 508+47.81 | 103 | — | 40 | 11.5 | — |
| Lt. 508+02.81 - Lt. 508+47.81 | — | — | — | — | 10 |
| Rt. 508+02.81 - Rt. 508+47.81 | — | — | — | — | 10 |
| **Clay Streets** | | | | | |
| Rt. 607+82.5 | — | 1 | — | — | — |
| CL 608+76.47 - CL 609+26.47 | 103 | — | 40 | 11.4 | — |
| Lt. 608+81.47 - Lt. 609+26.47 | — | — | — | — | 10 |
| Rt. 608+81.47 - Rt. 609+26.47 | — | — | — | — | 10 |
| **Boner Street** | | | | | |
| CL 12+40.00 - CL 12+90.00 | 116 | — | 46 | 13.0 | — |
| Lt. 12+40.00 - Lt. 12+85.00 | — | — | — | — | 10 |
| Rt. 12+40.00 - Rt. 12+64.0 | — | — | — | — | 5 |
| Rt. 12+79.0 - Rt. 12+85.0 | — | — | — | — | 1 |
| Rt. 12+66.0 | — | 17 | — | — | — |
| Lt. 13+18.0 | — | 2 | — | — | — |
| Lt. 13+47.0 | — | 2 | — | — | — |
| Rt. 16+23.0 | — | 2 | — | — | — |
| Rt. 17+03.0 | — | 2 | — | — | — |
| Lt. 17+40.00 - Lt. 17+85.0 | — | — | — | — | 10 |
| Rt. 17+61.0 - Rt. 17+85.0 | — | — | — | — | 5 |
| Rt. 17+53.5 | — | 8 | — | — | — |
| CL 17+35.00 - CL 17+85.00 | 130 | — | 52 | 14.6 | — |
| **Belle Street** | | | | | |
| CL 29+60.00 - CL 30+36.25 | 149 | — | 60 | 16.7 | — |
| Lt. 29+60.00 - Lt. 30+30.44 | — | — | — | — | 20 |
| Rt. 29+60.00 - Rt. 30+36.25 | — | — | — | — | 16 |
| Lt. 30+48.5 | 2 | — | 1 | 0.2 | — |
| Lt. 31+26.5 | 2 | — | 1 | 0.3 | — |
| Lt. 31+90.5 | — | 2 | — | — | — |
| Lt. 33+19.0 | 2 | — | 1 | 0.2 | — |
| Lt. 33+90.5 | 1 | — | 1 | 0.1 | — |
| Rt. 33+95.0 | — | 2 | — | — | — |
| Lt. 34+73.5 | 2 | — | 1 | 0.3 | — |
| Rt. 36+25.5 | — | 1 | — | — | — |
| Lt. 36+90.0 | — | 1 | — | — | — |
| Rt. 37+17.5 | — | 13 | — | — | — |
| CL 39+70.00 - CL 40+63.00 | 72 | — | 29 | 8.1 | — |
| Lt. 39+75.00 - Lt. 40+00.00 | — | — | — | — | 6 |
| Rt. 39+75.00 - Rt. 40+00.00 | — | — | — | — | 6 |
| **Outfall Sewer** | | | | | |
| Rt.5+36.5 | 23 | — | 9 | 2.4 | — |
| Rt. 7+41.5 | 23 | — | 9 | 2.4 | — |
| 10+18.0 - 10+39.0 | 35 | — | 14 | 3.8 | — |
| Rt. 10+39.0 - Rt. 14+23.0 | — | 488 | — | — | — |
| TOTALS | 763 | 652 | 304 | 85 | 119 |

## P.C.C. PAVEMENT, 7" & PROTECTIVE COAT

| Location | 42000200 & 42001300 Sq Yd |
|---|---|
| **West Street** | |
| CL 500+43.52 - CL 507+97.81 | 2011 |
| Lt. 501+40.83 | 32 |
| Rt. 505+67.40 | 31 |
| **Clay Street** | |
| CL 607+80.00 - CL 608+76.47 | 337 |
| **Boner Street** | |
| CL 12+90.00 - CL 15+04.55 | 572 |
| Lt. 14+73.65 - Lt. 15+36.16 | 23 |
| Lt. 14+75.11 - Lt. 15+20.50 | 21 |
| CL 15+28.58 - CL 17+85.00 | 551 |
| Rt. 15+33.34 - Rt. 15+57.26 | 20 |
| Rt. 15+22.04 - Lt. 15+54.53 | 23 |
| **Belle Street** | |
| CL 30+36.25 - CL 35+04.48 | 1250 |
| Rt. 30+16.48 - Rt. 30+41.47 | 21 |
| Rt. 40+00.49 - Lt. 30+42.58 | 22 |
| Rt. 34+74.40 - Lt. 30+12.34 | 22 |
| Lt. 34+75.52 - Lt. 30+46.37 | 21 |
| CL 35+28.48 - CL 39+12.25 | 1022 |
| Rt. 30+13.35 - Rt. 35+38.07 | 20 |
| Rt. 30+47.81 - Lt. 35+54.57 | 23 |
| Rt. 38+81.27 - Lt. 40+40.17 | 23 |
| Lt. 38+83.20 - Lt. 40+74.19 | 20 |
| CL 39+36.25 - CL 39+70.00 | 40 |
| Rt. 40+42.43 - Rt. 39+64.46 | 20 |
| Rt. 40+76.47 - Rt. 39+67.51 | 23 |
| TOTALS | 6148 |

## PIPE CULVERT REMOVAL

| Location | 50105210 Foot | Description |
|---|---|---|
| West Street | | |
| Rt. 502+87.0 | 16 | 12" CMP |
| AR 503+62.0 | 37 | 12" CMP |
| Lt. 504+93.5 | 17 | 10" CMP |
| Lt. 506+43.0 | 17 | 10" CMP |
| Clay Street | | |
| Rt. 607+82.5 | 42 | 12" CMP |
| Boner Street | | |
| Lt. 13+18.0 | 24 | 10" CMP |
| Rt. 13+31.5 | 28 | 12" CMP |
| Lt. 13+47.5 | 26 | 10" Steel |
| Belle Street | | |
| Lt. 30+48.5 | 16 | Buried |
| Rt. 30+70.0 | 22 | 12" CMP |
| Rt. 31+16.5 | 24 | 10" CMP |
| Lt. 31+26.5 | 24 | 10" CMP |
| Lt. 31+90.5 | 33 | 10" Steel |
| Rt. 32+34.5 | 19 | 10" CMP |
| Rt. 33+16.5 | 16 | 10" CMP |
| Lt. 33+19.0 | 21 | 10" CMP |
| Lt. 33+90.5 | 18 | 12" CMP |
| Rt. 33+95.0 | 24 | 12" CMP |
| AR 34+77.0 | 33 | 12" CMP |
| Rt. 36+25.5 | 14 | Buried |
| Rt. 36+47.0 | 10 | 10" CMP |
| Rt. 38+19.0 | 22 | |
| TOTALS | 503 | |

## P.C.C. DRIVEWAY PAVEMENT, 6" & PROTECTIVE COAT

| Location | 42000200 & 42001300 Sq Yd |
|---|---|
| **West Street** | |
| Rt. 500+65.5 | 40 |
| Rt. 501+75.0 | 22 |
| Rt. 502+13.0 | 22 |
| Lt. 502+60.5 | 31 |
| Rt. 502+87.0 | 22 |
| Lt. 504+93.5 | 30 |
| Rt. 505+04.5 | 41 |
| Lt. 506+43.0 | 30 |
| **Clay Streets** | |
| Rt. 607+82.5 | 20 |
| **Boner Street** | |
| Lt. 13+18.0 | 31 |
| Rt. 13+31.5 | 43 |
| Lt. 13+47.5 | 39 |
| Lt. 15+65.0 - Lt. 16+35.0 | 54 |
| Rt. 16+23.0 | 33 |
| Rt. 17+03.0 | 43 |
| **Belle Street** | |
| Lt. 30+48.5 | 30 |
| Rt. 30+70.0 | 66 |
| Rt. 31+16.5 | 41 |
| Lt. 31+26.5 | 34 |
| Lt. 31+90.5 | 28 |
| Rt. 32+34.5 | 30 |
| Rt. 33+16.5 | 50 |
| Lt. 33+19.0 | 30 |
| Lt. 33+90.5 | 22 |
| Rt. 33+95.0 | 44 |
| Lt. 34+73.5 | 32 |
| Rt. 36+25.5 | 22 |
| Lt. 36+90.0 | 30 |
| Rt. 37+17.5 | 22 |
| Lt. 37+26.0 - Lt. 37+71.0 | 31 |
| Rt. 38+06.0 | 38 |
| Rt. 38+19.0 | 66 |
| TOTALS | //// |

## EXPLORATION TRENCH, SPECIAL

| Location | X2130010 Foot |
|---|---|
| **West Street** | |
| 18.5' Lt. 501+60.0 | 10 |
| 14.0' Lt. 502+60.0 | 10 |
| 14.0' Lt. 503+66.0 | 10 |
| 27.0' RT. 503+67.5 | 10 |
| 13.0' Lt. 503+79.0 | 10 |
| 13.0' Lt. 503+88.0 | 10 |
| 13.5' Lt. 506+35.5 | 10 |
| 14.0' Lt. 507+49.0 | 10 |
| 4.0' Lt. 507+78.0 | 10 |
| **Clay Street** | |
| 9.0' Rt. 607+65.0 | 10 |
| 14.0' Lt. 608+28.0 | 10 |
| 7.0' Rt. 608+24.0 | 10 |
| 14.0' Lt. 608+50.0 | 10 |
| 14.0' Lt. 609+00.0 | 10 |
| **Boner Street** | |
| 14.0' Rt. 12+50.0 | 10 |
| 19.5' Rt. 12+93.0 | 10 |
| **Belle Street** | |
| 18.5' Lt. 32+60.0 | 10 |
| **Outfall Sewer** | |
| 67.0' Rt. 5+54.0 | 10 |
| 70.0' Rt. 7+41.5 | 10 |
| 15.0' Rt. 7+41.5 | 10 |
| 9+00.0 | 10 |
| 10+40.0 | 10 |
| 11+33.0 | 10 |
| TOTAL | 230 |

## CONCRETE REMOVAL

| Location | 44000200 Drive Pavt. Sq Yd | 44000500 Comb Curb & Gutter Foot | 44000600 Sidewalk Sq Ft |
|---|---|---|---|
| **West Street** | | | |
| Lt. 500+43.52 - Lt. 500+48.52 | — | 5 | — |
| Rt. 500+43.52 - Rt. 500+48.52 | — | 5 | — |
| **Clay Streets** | | | |
| Lt. 608+02.00 - Lt. 608+20.50 | — | — | 46 |
| Rt. 607+55.00 - Rt. 607+58.50 | — | — | 44 |
| Lt. 608+50.00 - Lt. 608+63.00 | — | — | 34 |
| **Boner Street** | | | |
| Rt. 13+31.50 | 38 | — | — |
| Rt. 14+73.00 - Rt. 15+01.00 | — | — | 75 |
| Rt. 15+28.50 - Rt. 16+88.00 | — | — | 457 |
| Lt. 16+36.00 - Lt. 17+35.50 | — | — | 244 |
| **Belle Street** | | | |
| Rt. 30+70.00 | 42 | — | — |
| Rt. 32+34.50 | 22 | — | — |
| Rt. 33+16.50 | 28 | — | — |
| Rt. 35+75.00 - Rt. 36+15.00 | — | — | 114 |
| Rt. 35+45.50 - Rt. 35+48.00 | — | — | 25 |
| Rt. 36+93.05 - Rt. 36+96.50 | — | — | 8 |
| Rt. 37+12.00 - Rt. 39+00.00 | — | — | 470 |
| Rt. 38+18.00 | 24 | — | — |
| Lt. 39+03.50 - Lt. 39+50.00 | — | — | 75 |
| TOTALS | 154 | 10 | 1652 |

## AGGREGATE SURFACE COURSE, TYPE B

| Location | 40200800 Ton |
|---|---|
| Various for Access | 200 |

## SEEDING, CLASS I, SPECIAL

| | 25000900 Acre |
|---|---|
| West Street | 0.7 |
| Clay Streets | 0.2 |
| Boner Street | 0.2 |
| Belle Street | 0.6 |
| Outfall Sewer/ Detention Pond | 6.9 |
| TOTALS | 8.6 |

## FIELD TILES - ROOF DRAINS ALLOWANCE

Storm Sewer, Class B, Type 1

| Location | 55080010 4" Foot | 55080020 6" Foot | 55080030 8" Foot |
|---|---|---|---|
| Various Locations | 40 | 40 | 40 |

## ADJUSTING WATER MAIN

| Location | 56106200 4" Foot | 56106300 6" Foot | XX008395 12" Schedule 20 Welded Steel Pipe w/ End Seals Foot |
|---|---|---|---|
| Intersection Belle & West Streets | 84 | — | — |
| Intersection Belle & Clay Streets | — | 132 | — |
| Sta. 10+44.0 OUTFALL SEWER | — | 41 | 27 |
| TOTALS | 84 | 173 | 27 |

## PROTECTIVE COAT

| Location | 42001300 Sq Yd * |
|---|---|
| PCC Pavement | 6148 |
| PCC Driveway | //// |
| PCC Sidewalk | 224 |
| B-6.24 Curb & Gutter | 1407 |
| TOTALS | 8840 |

* Total Quantity See Individual Schedules

## AGGREGATE BASE COURSE, TYPE A 4"

| Location | 35100800 Sq Yd |
|---|---|
| West Street | 2691 |
| Clay Street | 449 |
| Boner Street | 1501 |
| Belle Street | 3101 |
| TOTAL | 7806 |

## TREE REMOVAL

| Location | 20100110 6 to 15 Unit | 20100210 Over 15 Unit |
|---|---|---|
| West Street | | |
| Rt. 502+34 | 10 | — |
| Rt. 502+69 | — | 36 |
| Lt. 506+34 | 11 | — |
| Clay Street | | |
| Rt. 608+77 | — | 48 |
| Belle Street | | |
| Rt. 35+62 | 13 | — |
| TOTAL | 34 | 84 |

| REVISIONS | | | |
|---|---|---|---|
| NO. | BY | DATE | |
| 1 | MMP | 1-30-07 | |
| 2 | MMP | 4-17-07 | |
| 3 | MMP | 11-26-07 | |

SCALE: N/A
DATE: Aug. 2006
JOB NO.: 08-040A
DESIGNED: MMP
DRAWN: Les Jenkins
FIELD BOOK: XXX


BAINBRIDGE & ASSOCIATES, INC.
Consulting Engineers
1870 SOUTH TAYLORVILLE ROAD
DECATUR ILLINOIS
Illinois License 184-001255


# VILLAGE OF OREANA, ILLINOIS

SAFE TS-LU PROJECT

## SCHEDULE OF QUANTITIES

| ROUTE NO. | SECTION | CITY | TOTAL SHEETS | SHEET NO. |
|---|---|---|---|---|
| | 05-00001-00-RP | OREANA | 46 | 4 |
| FED. ROAD DIST. NO. | | ILLINOIS | PROJECT HPP-0913 (001) | |

**CONTRACT NUMBER 95537**

# STORM SEWER SCHEDULE

| Location | 542I3669 | 542I3705 | 55A4710 | 55A4720 | 55A4730 | XX008393 | XX008394 | 550B0250 | 550B0120 | 550B0160 | 550B0180 | 550B0190 | 550B0210 | 550B0340 | 550B0360 | 550B0380 | 550B0410 | 550B0450 | 61140200 | 61140500 | 61141500 | 20800250 |
|---|---|---|---|---|---|---|---|---|---|---|---|---|---|---|---|---|---|---|---|---|---|---|
| | Precast Reinf. Concrete Flared End Section | | Reinf. Concrete Elliptical Pipe, Type I | | | Storm Sewer Tap | | Class B | | | | | | | | | | | | | | |
| | | | Span 60" Rise 38" | Span 68" Rise 43" | Span 76" Rise 48" | | | Type 1 | | | | | | Type 2 | | | | | Special | | | Trench Backfill Cu Yd |
| | 24" Each | 60" Each | Foot | Foot | Foot | 18" Each | 24" Each | 12" Foot | 24" Foot | 36" Foot | 42" Foot | 48" Foot | 60" Foot | 12" Foot | 15" Foot | 18" Foot | 24" Foot | 30" Foot | 12" Foot | 16" Foot | 42" Foot | |
| **West Street** | | | | | | | | | | | | | | | | | | | | | | |
| 22.0' Rt. 500+39.0 - 14.0' Rt. 501+60.0 | — | — | — | — | — | — | — | — | — | — | — | — | — | 118 | — | — | — | — | — | — | — | 28 |
| 14.0' Rt. 501+60.0 - 13.5' Lt. 501+60.0 | — | — | — | — | — | — | — | 25 | — | — | — | — | — | — | — | — | — | — | — | — | — | 3 |
| 13.5' Rt. 502+60.0 - 14.0' Lt. 502+60.0 | — | — | — | — | — | — | — | 25 | — | — | — | — | — | — | — | — | — | — | — | — | — | 3 |
| 14.0' Lt. 502+60.0 - 3.0' Lt. 503+74.0 | — | — | — | — | — | — | — | — | — | — | — | — | — | — | — | 115 | — | — | — | — | — | 41 |
| 22.6' Lt. 503+57.0 - 3.0' Lt. 503+74.0 | — | — | — | — | — | — | — | — | — | — | — | — | — | — | — | — | — | — | 25 | — | — | 6 |
| 20.5' Rt. 503+57.0 - 33.4' Rt. 503+74.8 | — | — | — | — | — | — | — | — | — | — | — | — | — | — | — | — | — | — | 26 | — | — | 6 |
| 3.0' Lt. 503+74.0 - 33.4' Rt. 503+74.8 | — | — | — | — | — | — | — | — | — | — | — | — | — | — | 31 | — | — | — | — | — | — | 8 |
| 3.0' Lt. 503+74.0 - 23.3' Lt. 503+99.0 | — | — | — | — | — | — | — | — | — | — | — | — | — | — | — | — | — | — | 25 | — | — | 5 |
| 33.4' Rt. 503+74.8 - 41.1' Rt. 503+93.6 | — | — | — | — | — | — | — | — | — | — | — | — | — | 12 | — | — | — | — | — | — | — | 3 |
| 41.1' Rt. 503+93.6 - 41.0' Rt. 504+00.0 | — | — | — | — | — | — | — | 4 | — | — | — | — | — | — | — | — | — | — | — | — | — | — |
| 23.3' Lt. 503+99.0 - 42.3' Lt. 503+99.5 | — | — | — | — | — | — | — | 17 | — | — | — | — | — | — | — | — | — | — | — | — | — | — |
| 3.0' Lt. 503+74.0 - 4.0' Lt. 506+35.5 | — | — | — | — | — | — | — | — | — | — | — | — | — | — | — | — | — | 251 | — | — | — | 153 |
| 4.0' Lt. 506+35.5 - 13.5' Lt. 506+35.5 | — | — | — | — | — | — | — | 7 | — | — | — | — | — | — | — | — | — | — | — | — | — | 1 |
| 4.0' Lt. 506+35.5 - 13.5' Rt. 506+35.5 | — | — | — | — | — | — | — | 15 | — | — | — | — | — | — | — | — | — | — | — | — | — | 2 |
| 4.0' Lt. 506+35.5 - 4.0' Lt. 507+55.0 | — | — | — | — | — | — | — | — | — | 114 | — | — | — | — | — | — | — | — | — | — | — | 68 |
| 19.6' Rt. 507+51.5 - 4.0' Lt. 507+55.0 | — | — | — | — | — | — | — | 29 | — | — | — | — | — | — | — | — | — | — | — | — | — | 4 |
| 22.9' Lt. 507+33.5 - 4.0' Lt. 507+55.0 | — | — | — | — | — | — | — | — | — | — | — | — | — | — | — | — | — | — | 24 | — | — | 3 |
| 4.0' Lt. 507+55.0 - 4.0' Lt. 507+85.0 | — | — | — | — | — | — | — | — | — | — | — | — | — | — | — | — | — | — | 25 | — | — | 3 |
| 4.0' Lt. 507+85.0 - 21.5' Lt. 507+48.0 | — | — | — | — | — | — | — | 19 | — | — | — | — | — | — | — | — | — | — | — | — | — | 2 |
| 4.0' Lt. 507+85.0 - 20.5' Rt. 507+48.0 | — | — | — | — | — | — | — | 25 | — | — | — | — | — | — | — | — | — | — | — | — | — | 3 |
| **Clay Streets** | | | | | | | | | | | | | | | | | | | | | | |
| CL 607+65.0 - 13.5' Lt. 607+65.0 | — | — | — | — | — | — | — | 11 | — | — | — | — | — | — | — | — | — | — | — | — | — | 2 |
| CL 607+65.0 - 13.5' Rt. 607+65.0 | — | — | — | — | — | — | — | — | — | — | — | — | — | — | — | — | — | — | 11 | — | — | 2 |
| CL 607+65.0 - 14.0' Lt. 608+28.0 | — | — | — | — | — | — | — | 59 | — | — | — | — | — | — | — | — | — | — | — | — | — | 13 |
| 14.0' Lt. 608+28.0 - 14.0' Lt. 609+00.0 | — | — | — | — | — | — | — | — | — | — | — | — | — | — | — | — | — | — | — | — | 66 | 37 |
| 14.0' Lt. 609+00.0 - 20.0' Lt. 609+00.0 | — | — | — | — | — | — | — | 4 | — | — | — | — | — | — | — | — | — | — | — | — | — | — |
| 14.0' Lt. 609+00.0 - 15.0' Rt. 609+00.0 | — | — | — | — | — | — | — | 26 | — | — | — | — | — | — | — | — | — | — | — | — | — | 3 |
| 14.0' Lt. 609+00.0 - 14.0' Lt. 610+39.0 | — | — | — | — | — | — | — | — | — | — | 126 | — | — | — | — | — | — | — | — | — | — | 104 |
| **Bonner Street** | | | | | | | | | | | | | | | | | | | | | | |
| 14.5' Rt. 12+50.0 - 13.5' Rt. 12+45.0 | — | — | — | — | — | — | — | — | — | — | — | — | — | — | — | — | — | — | 43 | — | — | 2 |
| CL 12+48.0 - 13.5' Lt. 12+48.0 | — | — | — | — | — | — | — | 11 | — | — | — | — | — | — | — | — | — | — | — | — | — | 2 |
| CL 12+48.0 - 13.5' Rt. 12+48.0 | — | — | — | — | — | — | — | 11 | — | — | — | — | — | — | — | — | — | — | — | — | — | 2 |
| CL 12+48.0 - CL 15+13.6 | — | — | — | — | — | — | — | — | — | — | — | — | — | — | — | — | — | — | — | 218 | — | 45 |
| CL 15+50.0 - CL 17+30.0 | — | — | — | — | — | — | — | 176 | — | — | — | — | — | — | — | — | — | — | — | — | — | 34 |
| CL 17+30.0 - 13.5' Lt. 17+30.0 | — | — | — | — | — | — | — | 11 | — | — | — | — | — | — | — | — | — | — | — | — | — | 2 |
| CL 17+30.0 - 13.5' Rt. 17+30.0 | — | — | — | — | — | — | — | 11 | — | — | — | — | — | — | — | — | — | — | — | — | — | 2 |
| **Belle Street** | | | | | | | | | | | | | | | | | | | | | | |
| CL 32+60.0 - 13.5' Lt. 32+60.0 | — | — | — | — | — | — | — | 11 | — | — | — | — | — | — | — | — | — | — | — | — | — | 2 |
| CL 32+60.0 - 13.5' Rt. 32+60.0 | — | — | — | — | — | — | — | 11 | — | — | — | — | — | — | — | — | — | — | — | — | — | 2 |
| CL 32+60.0 - CL 34+49.0 | — | — | — | — | — | — | — | 185 | — | — | — | — | — | — | — | — | — | — | — | — | — | 28 |
| CL 34+49.0 - 13.5' Lt. 34+49.0 | — | — | — | — | — | — | — | 11 | — | — | — | — | — | — | — | — | — | — | — | — | — | 2 |
| CL 34+49.0 - 13.5' Rt. 34+49.0 | — | — | — | — | — | — | — | 11 | — | — | — | — | — | — | — | — | — | — | — | — | — | 2 |
| CL 34+49.0 - CL 35+13.0 | — | — | — | — | — | — | — | — | — | — | — | — | — | — | — | — | — | — | — | 59 | — | 11 |
| CL 35+13.0 - 5.0' Rt. 37+53.0 | — | — | — | — | — | — | — | — | — | 234 | — | — | — | — | — | — | — | — | — | — | — | 133 |
| 13.5' Lt. 37+48.0 - 5.0' Rt. 37+53.0 | — | — | — | — | — | — | — | 15 | — | — | — | — | — | — | — | — | — | — | — | — | — | 4 |
| 13.5' Rt. 37+48.0 - 5.0' Rt. 37+53.0 | — | — | — | — | — | — | — | 5 | — | — | — | — | — | — | — | — | — | — | — | — | — | 1 |
| 5.0' Rt. 37+53.0 - 5.0' Rt. 39+10.0 | — | — | — | — | — | — | — | — | — | — | 151 | — | — | — | — | — | — | — | — | — | — | 84 |
| 13.5' Lt. 39+82.0 - 5.0' Rt. 39+10.0 | — | — | — | — | — | — | — | 29 | — | — | — | — | — | — | — | — | — | — | — | — | — | 6 |
| 5.0' Rt. 39+10.0 - CL 39+68.0 | — | — | — | — | — | — | — | — | — | — | — | — | — | — | — | — | — | — | — | — | — | 10 |
| 13.5' Lt. 39+68.0 - CL 39+68.0 | — | — | — | — | — | — | — | 11 | — | — | — | — | — | — | — | — | — | — | — | 53 | — | 2 |
| 13.5' Rt. 39+68.0 - CL 39+68.0 | — | — | — | — | — | — | — | 11 | — | — | — | — | — | — | — | — | — | — | — | — | — | 2 |
| **Outfall Sewer** | | | | | | | | | | | | | | | | | | | | | | |
| 0+00.0 - 2+57.0 | — | — | — | — | — | — | — | — | — | — | — | 244 | — | — | — | — | — | — | — | — | — | 219 |
| 2+57.0 - 4+14.0 | — | — | — | — | — | — | — | — | — | — | — | 149 | — | — | — | — | — | — | — | — | — | — |
| 4+14.0 - 5+36.5 | — | — | — | — | — | — | — | — | — | — | — | 115 | — | — | — | — | — | — | — | — | — | — |
| 71.5' Rt. 5+60.4 - 5+36.5 | — | — | — | — | — | — | — | — | — | — | — | — | — | — | — | — | — | — | — | 70 | — | 6 |
| 5+36.5 - 7+41.5 | — | — | 196 | — | — | — | — | — | — | — | — | — | — | — | — | — | — | — | — | — | — | — |
| 78.0' Rt. 7+41.5 - 35.0' Rt. 7+41.5 | — | — | — | — | — | — | — | — | — | — | — | — | — | — | — | — | — | — | — | 40 | — | 6 |
| 35.0' Rt. 7+41.5 - 7+41.5 | — | — | — | — | — | — | — | — | 26 | — | — | — | — | — | — | — | — | — | — | — | — | — |
| 7+41.5 - 9+71.5 | — | — | — | 221 | — | — | — | — | — | — | — | — | — | — | — | — | — | — | — | — | — | — |
| Lt. 9+00.0 | — | — | — | — | — | 1 | — | — | — | — | — | — | — | — | — | — | — | — | — | — | — | — |
| 9+71.5 - 9+86.5 | — | — | — | — | 7 | — | — | — | — | — | — | — | — | — | — | — | — | — | — | — | — | — |
| 9+86.5 - 11+33.0 | — | — | — | — | 187 | — | — | — | — | — | — | — | — | — | — | — | — | — | — | — | — | 18 |
| Rt. 10+06 | — | — | — | — | — | — | — | — | — | — | — | — | — | — | — | — | — | — | — | — | — | — |
| 37.0' Rt. 10+06.0 - 10+06.0 | — | — | — | — | — | — | — | — | 31 | — | — | — | — | — | — | — | — | — | — | — | — | — |
| 11+33.0 - 13+15.0 | — | — | — | — | 172 | — | — | — | — | — | — | — | — | — | — | — | — | — | — | — | — | — |
| 13+15.0 - 14+37.0 | — | — | — | — | — | — | — | — | — | — | — | — | 117 | — | — | — | — | — | — | — | — | — |
| 14+37.0 - 14+49.0 | — | 1 | — | — | — | — | — | — | — | — | — | — | — | — | — | — | — | — | — | — | — | — |
| 100+00.0 - 100+06.0 | 1 | — | — | — | — | — | — | — | — | — | — | — | — | — | — | — | — | — | — | — | — | — |
| 100+06.0 - 100+74.0 | — | — | — | — | — | — | — | — | — | — | — | — | — | — | — | — | 66 | — | — | — | — | — |
| TOTALS | 1 | 1 | 196 | 221 | 316 | 1 | 1 | 786 | 57 | 348 | 277 | 518 | 117 | 130 | 31 | 115 | 66 | 251 | 182 | 435 | 66 | 1130 |

| REVISIONS | | | |
|---|---|---|---|
| NO. | BY | DATE | |
| 1 | MMP | 1-30-07 | |
| 2 | MMP | 4-2-07 | |
| 3 | MMP | 11-08-07 | |

| | | | |
|---|---|---|---|
| DESIGNED MMP | SCALE N/A | | |
| DRAWN Lee Jenkins | DATE Aug. 2006 | | |
| FIELD BOOK XXX | JOB NO. C6-040A | | |


BAINBRIDGE & ASSOCIATES, INC.
Consulting Engineers
1670 SOUTH TAYLORVILLE ROAD
DECATUR ILLINOIS
Illinois License 184-001285


**VILLAGE OF OREANA, ILLINOIS**
SAFE TE&LU PROJECT

**SCHEDULE OF QUANTITIES**

| ROUTE NO. | SECTION | CITY | TOTAL SHEETS | SHEET NO. |
|---|---|---|---|---|
| | 05-00001-00-RP | OREANA | 46 | 5 |
| FED. ROAD DIST. NO. | | ILLINOIS | PROJECT HPP-0913 (001) | |

**CONTRACT NUMBER 95537**

## UTILITY ADJUSTMENTS

| Location | 56400100 Fire Hydrant to be Moved Each | 56500100 Dom Meter Vaults to be Moved Each | 56500300 Dom Meter Vaults to be Adjusted Each | 60260400 Inlet Adj w/ New Ty I, Frame, CL Each | 60266600 Valve Boxes to be Adjusted Each | 60500040 Removing Manholes Each | 60500060 Removing Inlets Each |
|---|---|---|---|---|---|---|---|
| **West Street** | | | | | | | |
| 21' Rt. 501+64.0 | — | — | 1 | — | — | — | — |
| 20' Lt. 502+09.0 | — | — | — | 1 | — | — | — |
| 20' Lt. 503+14.0 | — | — | 1 | — | — | — | — |
| 9' Lt. 503+49.0 | — | — | — | — | — | 1 | — |
| 13' Lt. 503+59.0 | — | — | — | — | 1 | — | — |
| 18' Rt. 503+59.0 | — | — | — | — | — | — | 1 |
| 18' Lt. 503+99.0 | — | — | — | — | — | — | 1 |
| 24' Rt. 504+04.0 | — | — | — | — | — | — | 1 |
| 19' Lt. 504+10.0 | — | — | — | — | 1 | — | — |
| 21' Lt. 504+67.0 | — | — | 1 | — | — | — | — |
| 21' Rt. 505+47.0 | — | — | 1 | — | — | — | — |
| 18' Lt. 507+35.0 | — | — | — | — | — | — | 1 |
| 4' Lt. 507+55.0 | — | — | — | — | — | 1 | — |
| **Clay Street** | | | | | | | |
| 15' Rt. 607+73.0 | — | 1 | — | — | — | — | — |
| **Bonner Street** | | | | | | | |
| 19' Rt. 13+20.0 | — | 1 | — | — | — | — | — |
| 25' Lt. 13+79.0 | — | 1 | — | — | — | — | — |
| 20' Rt. 13+82.0 | — | — | 1 | — | — | — | — |
| 21' Rt. 14+90.0 | — | 1 | — | — | — | — | — |
| 12Rt. 15+47.0 | — | — | — | — | 1 | — | — |
| 19' Rt. 15+88.0 | — | — | 1 | — | — | — | — |
| 19' Rt. 15+90.0 | — | — | 1 | — | — | — | — |
| 24' Lt. 16+24 | — | — | 1 | — | — | — | — |
| 23' Lt. 16+60 | — | — | 1 | — | — | — | — |
| 23' Lt. 16+97 | — | — | 1 | — | — | — | — |
| 22' Rt. 16+88.0 | — | — | 1 | — | — | — | — |
| **Belle Street** | | | | | | | |
| 19' Lt. 30+83.0 | — | — | — | — | 1 | — | — |
| 24' Rt. 30+85.0 | — | — | 1 | — | — | — | — |
| 24' Lt. 31+00.0 | — | — | 1 | — | — | — | — |
| 22' Lt. 31+44.0 | — | — | 1 | — | — | — | — |
| 24' Rt. 31+46.0 | — | — | 1 | — | — | — | — |
| 22' Lt. 32+05.0 | — | — | 1 | — | — | — | — |
| 25' Rt. 32+20.0 | — | — | 1 | — | — | — | — |
| 24' Rt. 32+85.0 | — | — | 1 | — | — | — | — |
| 21' Lt. 32+90.0 | — | — | 1 | — | — | — | — |
| 22' Lt. 33+50.0 | — | — | 1 | — | — | — | — |
| 25' Rt. 33+51.0 | — | — | 1 | — | — | — | — |
| 23' Lt. 34+37.0 | — | — | 1 | — | — | — | — |
| 22' Lt. 35+87.0 | — | — | 1 | — | — | — | — |
| 18' Rt. 36+17.0 | — | — | — | — | — | — | 1 |
| 21' Rt. 36+71.0 | — | — | 1 | — | — | — | — |
| 22' Lt. 36+84.0 | — | 1 | — | — | — | — | — |
| 22' Lt. 37+07.0 | — | — | 1 | — | — | — | — |
| 20' Rt. 37+61.0 | — | — | 1 | — | — | — | — |
| 22' Lt. 37+65.0 | — | 1 | — | — | — | — | — |
| 19' Rt. 38+49.0 | — | — | 1 | — | — | — | — |
| 22' Lt. 38+49.0 | — | — | 1 | — | — | — | — |
| 16' Rt. 38+88.0 | — | — | — | — | — | — | 1 |
| 17' Lt. 38+98.0 | — | — | — | — | 1 | — | — |
| 30' Rt. 34+02.0 | — | — | — | — | — | — | 1 |
| 25' Lt. 34+43.0 | 1 | — | — | — | — | — | — |
| 21' Lt. 34+59.0 | — | — | 1 | — | — | — | — |
| 17' Rt. 34+64.0 | — | — | — | — | — | — | 1 |
| TOTALS | 1 | 6 | 29 | 1 | 5 | 2 | 8 |

## DRAINAGE STRUCTURES

| Location | 60218400 Manhole, Type A-1C 4' Dia. Each | 60223800 Manhole, Type A-1C 6' Dia. Each | 60224446 Manhole, Type A-1C 7' Dia. Each | X6020088 Manhole, Type A-1C 8' Dia. Each | X6020098 Manhole, Type A-1C 9' Dia. Each | X6020108 Manhole, Type A-1C 10' Dia. Each | 60242500 Inlets, Special No. 1 Each | 60242600 Inlets, Special No. 2 Each | 60242700 Inlets, Special No. 3 Each | 60242800 Inlets, Special No. 4 Each | 60242301 Inlets, Special No. 5 Each | 60242802 Inlets, Special No. 6 Each | 60242803 Inlets, Special No. 7 Each |
|---|---|---|---|---|---|---|---|---|---|---|---|---|---|
| **West Street** | | | | | | | | | | | | | |
| 13.5' Lt. 501+60.0 | — | — | — | — | — | — | — | 1 | — | — | — | — | — |
| 14.0' Rt. 501+60.0 | — | — | — | — | — | — | — | — | — | — | 1 | — | — |
| 14.0' Lt. 502+60.0 | — | — | — | — | — | — | — | — | — | — | 1 | — | — |
| 13.5' Rt. 502+60.0 | — | — | — | — | — | — | — | 1 | — | — | — | — | — |
| 3.0' Lt. 503+79.0 | — | — | 1 | — | — | — | — | — | — | — | — | — | — |
| 14.0' Lt. 506+35.5 | — | — | — | — | — | — | — | — | — | — | 1 | — | — |
| 4.0' Lt. 506+35.5 | — | 1 | — | — | — | — | — | — | — | — | — | — | — |
| 14.0' Rt. 506+35.5 | — | — | — | — | — | — | — | — | 1 | — | — | — | — |
| 4.0' Lt. 507+55.0 | 1 | — | 1 | — | — | — | — | — | — | — | — | — | — |
| 4.0' Lt. 507+85.0 | 1 | — | — | — | — | — | — | — | — | — | — | — | — |
| 21.5' Lt. 507+98.0 | — | — | — | — | — | — | — | — | 1 | — | — | — | — |
| 20.5' Rt. 507+98.0 | — | — | — | — | — | — | — | — | 1 | — | — | — | — |
| **Clay Street** | | | | | | | | | | | | | |
| 13.5' Lt. 607+65.0 | — | — | — | — | — | — | — | 1 | — | — | — | — | — |
| CL 607+65.0 | 1 | — | — | — | — | — | — | — | — | — | — | — | — |
| 13.5' Rt. 607+65.0 | — | — | — | — | — | — | — | 1 | — | — | — | — | — |
| 14.0' Lt. 608+28.0 | — | — | 1 | — | — | — | — | — | — | — | — | — | — |
| 20.0' Lt. 604+00.0 | — | — | — | — | — | — | — | — | 1 | — | — | — | — |
| 14.0' Lt. 604+00.0 | — | 1 | — | — | — | — | — | — | — | — | — | — | — |
| 15.0' Rt. 604+00.0 | — | — | — | — | — | — | — | — | 1 | — | — | — | — |
| 14.0' Lt. 610+33.0 | — | — | — | 1 | — | — | — | — | — | — | — | — | — |
| **Bonner Street** | | | | | | | | | | | | | |
| 14.0' Rt. 12+50.0 | — | — | — | — | — | — | — | — | 1 | — | — | — | — |
| 13.5' Lt. 12+45.0 | — | — | — | — | — | — | — | 1 | — | — | — | — | — |
| CL 12+45.0 | 1 | — | — | — | — | — | — | — | — | — | — | — | — |
| 13.5' Rt. 12+45.0 | — | — | — | — | — | — | — | 1 | — | — | — | — | — |
| 20.0' Lt. 14+74.5 | — | — | — | — | — | — | — | — | 1 | — | — | — | — |
| 20.8' Lt. 14+83.5 | — | — | — | — | — | — | — | — | 1 | — | — | — | — |
| 21.6' Rt. 14+83.5 | — | — | — | — | — | — | 1 | — | — | — | — | — | — |
| 22.7' Rt. 15+36.3 | — | — | — | — | — | — | 1 | — | — | — | — | — | — |
| CL 15+50.0 | 1 | — | — | — | — | — | — | — | — | — | — | — | — |
| 20.0' Lt. 15+58.0 | — | — | — | — | — | — | — | — | 1 | — | — | — | — |
| 14.0' Lt. 15+58.0 | — | — | — | — | — | — | — | — | — | 1 | — | — | — |
| 13.5' Lt. 17+30.0 | — | — | — | — | — | — | — | 1 | — | — | — | — | — |
| CL 17+30.0 | 1 | — | — | — | — | — | — | — | — | — | — | — | — |
| 13.5' Rt. 17+30.0 | — | — | — | — | — | — | — | 1 | — | — | — | — | — |
| **Belle Street** | | | | | | | | | | | | | |
| 13.5' Lt. 32+60.0 | — | — | — | — | — | — | — | 1 | — | — | — | — | — |
| CL 32+60.0 | 1 | — | — | — | — | — | — | — | — | — | — | — | — |
| 13.5' Rt. 32+60.0 | — | — | — | — | — | — | — | 1 | — | — | — | — | — |
| 13.5' Lt. 34+49.0 | — | — | — | — | — | — | 1 | — | — | — | — | — | — |
| CL 34+49.0 | 1 | — | — | — | — | — | — | — | — | — | — | — | — |
| 13.5' Rt. 34+49.0 | — | — | — | — | — | — | 1 | — | — | — | — | — | — |
| 21.1' Rt. 34+93.8 | — | — | — | — | — | — | 1 | — | — | — | — | — | — |
| 23.8' Rt. 35+36.1 | — | — | — | — | — | — | 1 | — | — | — | — | — | — |
| 14.0' Lt. 37+48.0 | — | — | — | — | — | — | — | — | — | — | — | 1 | — |
| 14.0' Rt. 37+48.0 | — | — | — | — | — | — | — | — | — | 1 | — | — | — |
| 5.0' Rt. 37+53.0 | — | 1 | — | — | — | — | — | — | — | — | — | — | — |
| 13.5' Lt. 38+82.0 | — | — | — | — | — | — | — | 1 | — | — | — | — | — |
| 13.5' Lt 39+68.0 | — | — | — | — | — | — | — | 1 | — | — | — | — | — |
| CL 39+68.0 | 1 | — | — | — | — | — | — | — | — | — | — | — | — |
| 13.5' Rt. 39+68.0 | — | — | — | — | — | — | 1 | — | — | — | — | — | — |
| **Outfall Sewer** | | | | | | | | | | | | | |
| 2+57.0 | — | — | — | 1 | — | — | — | — | — | — | — | — | — |
| 4+14.0 | — | — | — | 1 | — | — | — | — | — | — | — | — | — |
| 5+36.5 | — | — | — | — | 1 | — | — | — | — | — | — | — | — |
| 7.5' Rt. 5+60.4 | — | — | — | — | — | — | — | — | 1 | — | — | — | — |
| 7+41.5 | — | — | — | — | — | — | — | — | — | — | — | — | — |
| 35.0' Rt. 7+41.5 | — | — | — | — | — | — | — | — | — | — | — | — | 1 |
| 78.0' Rt. 7+41.5 | — | — | — | — | — | — | — | — | 1 | — | — | — | — |
| 9+71.5 | — | — | — | — | — | — | — | — | — | — | — | — | — |
| 9+86.5 | — | — | — | — | — | 1 | — | — | — | — | — | — | — |
| 37.0' Rt. 10+06.0 | — | — | — | — | — | 1 | — | — | — | — | — | — | — |
| 10+06.0 | — | — | — | — | — | 1 | — | — | — | — | — | — | 1 |
| 11+33.0 | — | — | — | — | — | 1 | — | — | — | — | — | — | — |
| 13+15.0 | — | — | — | — | — | 1 | — | — | — | — | — | — | — |
| TOTALS | 8 | 3 | 3 | 3 | 2 | 4 | 7 | 12 | 9 | 4 | 1 | 3 | 2 |

## CURB AND GUTTER

| Location | 60603300 Gutter Outlet Each | 60603800 Type B-6.24 Foot | 60603900 Protective Coat Sq Yd |
|---|---|---|---|
| **West Street** | | | |
| Lt. 500+43.52 - Lt. 503+36.16 | — | 293 | 100 |
| Rt. 500+43.52 - Rt. 503+38.54 | — | 295 | 101 |
| Lt. 503+36.16 - Rt. 14+75.65 | — | 45 | 15 |
| Rt. 503+38.54 - Rt. 15+57.26 | — | 43 | 15 |
| Lt. 504+20.50 - Lt. 14+75.00 | — | 44 | 15 |
| Rt. 504+22.04 - Lt. 15+54.53 | — | 45 | 15 |
| Lt. 504+20.50 - Lt. 507+12.94 | — | 292 | 100 |
| Rt. 504+22.04 - Rt. 507+13.83 | — | 292 | 100 |
| Lt. 507+12.94 - Rt. 34+74.40 | — | 44 | 15 |
| Rt. 507+13.83 - Rt. 33+58.07 | — | 43 | 15 |
| Lt. 507+46.37 - Lt. 34+75.52 | — | 44 | 15 |
| Rt. 507+47.81 - Lt. 35+54.87 | — | 45 | 15 |
| Lt. 507+46.37 - Lt. 508+02.81 | 1 | 1 | 2 |
| Rt. 507+47.81 - Rt. 508+02.81 | 1 | — | 2 |
| **Clay Street** | | | |
| Lt. 607+45.00 - Lt. 607+50.00 | 1 | — | 2 |
| Rt. 607+45.00- Rt. 607+50.00 | 1 | — | 2 |
| Lt. 607+50.00 - Lt. 607+90.17 | — | 40 | 14 |
| Rt. 607+50.00 - Rt. 607+92.43 | — | 42 | 14 |
| Lt. 607+90.17 - Rt. 38+81.27 | — | 45 | 15 |
| Rt. 607+92.43 - Rt. 39+70.00 | — | 48 | 16 |
| Lt. 608+74.19 - Lt. 38+83.20 | — | 43 | 15 |
| Rt. 608+76.47 - Lt. 39+70.00 | — | 47 | 16 |
| Lt. 608+74.19 - Lt. 608+81.47 | 1 | 2 | 2 |
| Rt. 608+76.47 - Rt. 608+81.47 | 1 | — | 2 |
| **Bonner Street** | | | |
| Lt. 12+80.00 - Lt.12+85.00 | 1 | — | 2 |
| Rt. 12+80.00 - Rt. 12+85.00 | 1 | — | 2 |
| Rt. 12+85.00 - Rt. 14+73.65 | — | 189 | 64 |
| Lt. 12+85.00 - Lt. 14+75.11 | — | 190 | 64 |
| Rt. 15+57.26 - Rt. 17+35.00 | — | 178 | 61 |
| Lt. 15+54.53 - Lt. 17+35.00 | — | 175 | 60 |
| Lt. 17+35.00 - Lt. 17+40.00 | 1 | — | 2 |
| Rt. 17+35.00 - Lt. 17+40.00 | 1 | — | 2 |
| **Belle Street** | | | |
| Lt. 30+32.94 - Lt. 30+35.94 | 1 | — | 2 |
| Rt. 30+36.47 - Rt. 30+41.47 | 1 | — | 2 |
| Rt. 30+41.47 - Rt. 34+74.40 | — | 433 | 148 |
| Lt. 30+35.94 - Lt. 34+75.52 | — | 440 | 151 |
| Rt. 35+58.07 - Rt. 38+81.27 | — | 323 | 110 |
| Lt. 35+54.87 - Lt. 38+83.20 | — | 323 | 110 |
| Lt. 34+70.00 - Lt. 34+75.00 | 1 | — | 2 |
| Rt. 34+70.00 - Rt. 34+75.00 | 1 | — | 2 |
| TOTALS | 14 | 4044 | 1407 |

## SLOTTED DRAIN 12" with 2 1/2" SLOT

| Location | 20065745 Foot |
|---|---|
| 13.75' Lt. 506+11.0 - 13.75' Lt. 506+60.0 | 40 |
| 13.75' Rt. 506+11.0 - 13.75' Rt. 506+60.0 | 40 |
| 13.75' Lt. 37+23.5 - 13.75' Lt. 37+72.5 | 40 |
| 13.75' Rt. 37+23.5 - 13.75' Rt. 37+72.5 | 40 |
| TOTAL | 160 |

## WATER SERVICE LINE, 1"

| Location | 56200300 Foot |
|---|---|
| **Clay Street** | |
| 15' Rt. 607+73.0 | 10 |
| **Bonner Street** | |
| 19' Rt. 13+20.0 | 10 |
| 25' Lt. 13+79.0 | 8 |
| 21' Rt. 14+90.0 | 15 |
| **Belle Street** | |
| 22' Lt. 36+84.0 | 11 |
| 22' Lt. 37+65.0 | 8 |
| TOTAL | 62 |

## WATER VALVES, 6"

| Location | 56104900 Each |
|---|---|
| **Belle Street** | |
| 32' Lt. 39+43.0 | 1 |

## FENCING TO BE REMOVED AND RE-ERECTED

| Location | 66410400 Chain Link Foot |
|---|---|
| **West Street** | |
| 25.0' Lt. 502+70.0 - 25.0' Lt. 503+08.0 | 40 - 42" |
| **Belle Street** | |
| 41.0' Rt. 37+23.0 - 35.0' Rt. 38+07.0 | 98 - 42" |
| TOTALS | 138 |

| REVISIONS | | | |
|---|---|---|---|
| NO. | BY | DATE | |
| 1 | MHP | 1-30-04 | |
| 2 | MHP | 4-7-04 | |

| | | |
|---|---|---|
| DESIGNED MHP | SCALE N/A | |
| DRAWN Lee Jenkins | DATE Aug. 2006 | |
| FIELD BOOK XXX | JOB NO. 06-040A | |


BLINBRIDGE & ASSOCIATES, INC.
Consulting Engineers
1670 SOUTH TAYLORVILLE ROAD
DECATUR, ILLINOIS
Illinois License 184001255


# VILLAGE OF OREANA, ILLINOIS

SAFE TEA-LU PROJECT

## SCHEDULE OF QUANTITIES

| ROUTE NO. | SECTION | CITY | TOTAL SHEETS | SHEET NO. |
|---|---|---|---|---|
| | 05-00001-00-RP | OREANA | 46 | 6 |
| FED. ROAD DIST. NO. | | ILLINOIS | PROJECT HPP-0913 (001) | |

**CONTRACT NUMBER 95537**

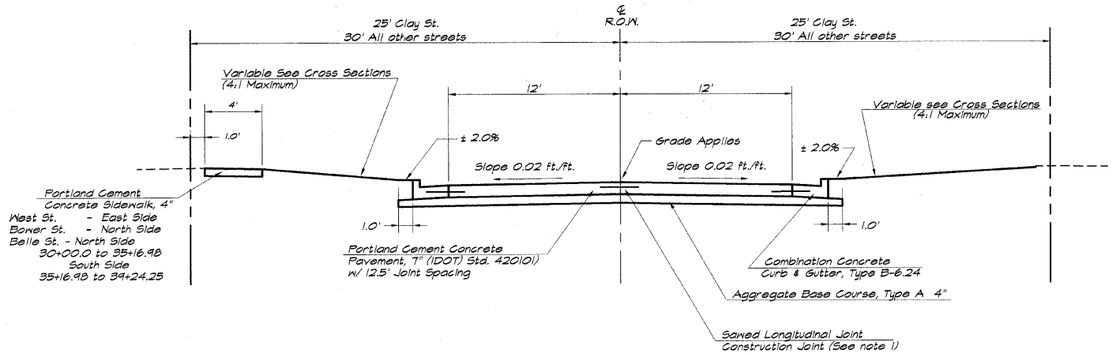


TYPICAL SECTION - SAFETEA-LU PROJECT

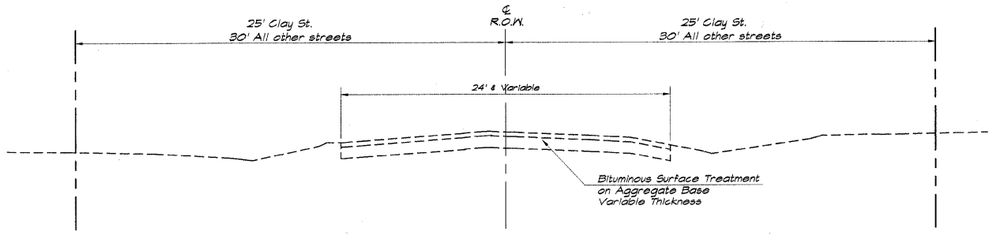


TYPICAL EXISTING SECTION

## GENERAL NOTES

This Section shall be constructed in accordance with the Plans, Standard Specifications for Road and Bridge Construction, adopted January 1, 2007, Supplemental Specifications, and the Special Provisions.

Any reference to the Illinois Division of Highway Standards shall mean the latest revision to said Standards.

Existing concrete or asphalt driveways and at the beginning or end of each street shall be neatly sawed full depth at the locations where the Proposed Construction will abut the existing. The cost of this work shall be considered included in the cost of "Earth Excavation"

At all locations where the Proposed P.C.C. Pavement is less than Two (2) feet in width, the pavement shall be poured Monolithic with the Proposed Standard Barrier Curb and Gutter.

All earth surfaces disturbed in conjunction of the new pavement and appurtenances shall be seeded in accordance with Section 250 and the Special Provisions.

All radii shown for the Standard Barrier Curb and Gutter are to edge of pavement.

The location of the various underground utilities as shown on the plans are from information furnished by the various Utility Companies, record drawings, and field surveys. It is the Contractor's obligation to establish the actual location of the utilities. The Contractor shall use special care when conducting operations near the utilities so as to prevent damage to them.

The cost of removing any miscellaneous items located within the limits of this improvement and which have not been accounted for as a pay items shall be considered included in the contract.

All erosion control products furnished shall be specifically recommended by the manufacturer for the use specified in Section 280 of the Standard Specifications, BDE 800ß7, the SWPPP and in the erosion control plan. Prior to the approval and use of the product, the contractor shall submit to the engineer a notarized certification by the producer stating the intended use of the product and that the physical properties required for this application are met or exceeded. The contractor shall provide manufacturer installation procedures to facilitate the engineer in construction inspection.

## NOTES

1. The Sawed Longitudinal Joint or Grouted-In-Place Tie Bar Joint shall be in accordance with Standard 420001
2. Combination Concrete Curb & Gutter, Type B-6.24 shall conform to Standard 606001.
3. Sawed Contraction Joints shall conform to Standard 420001. The layout of the joints shall conform to Standard 420 101 except as modified on the Detail Sheet. The dowel bar for the Sawed Contraction Joint shall be 1 1/4 inches in diameter.
4. See Standard 420101 for the Detail of Traverse Construction Joint.
5. All sawed joints shall be sealed with a hot-poured joint sealer meeting the requirements of Art 1050.02 of the Standard Specifications.

BENCH MARKS

1. Bronze Cap on N/E leg of Water Tower @ Water Plant (Control Elevation) Elev. 688.71
2. Cotton Spike in Utility Pole on East Side of East Street North of Belle Street (1st Pole North) Sta. 44+20 Rt.22' - Elev. 684.77
3. Top of Nut (Open/Close) on Fire Hydrant @ N/E corner Clay & Belle Streets - Elev. 686.71 25' Lt. Sta. 39+43.6
4. Cotton Spike in Utility Pole on N/W corner of West & Belle Streets - Elev. 685.89 23' Lt. Sta. 34+96
5. Top "M" in Mueller on Fire Hydrant on N. Side of Belle St. East of Orchard Street - Elev. 688.33 22.7' Lt. 30+92.7
6. Top "M" in Mueller on Fire Hydrant on N/E corner Orchard & Boner Streets - Elev. 689.99 34.9' Lt. Sta. 10+30
7. Top "M" in Mueller on Fire Hydrant on South side of Boner West of West Street - Elev. 688.25 21.2' Rt. Sta. 14+15.8 (East ⅊ of 305 Boner St.)
8. Top "M" in Mueller on Fire Hydrant on South side of Boner West of Clay Street - Elev. 690.40 24.5' Rt. Sta. 18+02.8 (across from 206 Boner St.)
9. Cotton Spike in Utility Pole on South side of South St. @ Lorraine St. - Elev. 690.44 (across from Old Library)
10. Top Survey Marker @ South St. & Orchard St. - 687.54 CL Sta. 400+00.0

### STRUCTURAL DESIGN INFORMATION

Structural Design Traffic Year : 2018 (400 ADT)
PV = 348 SU = 50 MU = 2
Street Classification : Class III

Percent of Structural Design Traffic in Design Lane
P = 50% S = 50% M = 50%
Traffic Factor : TF = 0.077 (Rigid)

Minimum Soil Support:
IBR = 2.0 (Assumed) TF Minimum = 0.50

Pavement Structural Materials:
P.C.C. Pavement, 7" for 12.5' Joint Spacing

Hot-Mix Requirements:

| Mixture Uses | AC/PG | RAP % | Design Air Voids | Mixture Composition | Friction Aggregate |
|---|---|---|---|---|---|
| Incidental Hot-Mix Asph Surfacing | PG-64-22 | 15 | 4.0 @ 50 gyration | IL. 9.5 | Mix C |
| Hot-Mix Asph Base Cse, 5" | PG-64-22 | 30 | 2.0 @ 30 gyration | BAM IL 19.0 | N/A |

## LEGEND

- P.C.C. DRIVEWAY PAVEMENT, 6" and 8"
- 2 INCH INCIDENTAL HOT-MIX ASPHALT SURFACING ON AGGREGATE BASE COURSE, TYPE A, 5"
- P.C.C. SIDEWALK
- AGGREGATE SURFACE COURSE, TYPE A 6"
- CONCRETE REMOVAL
- PROPOSED MANHOLE
- PROPOSED INLET
- 8" SAN — EXISTING SANITARY SEWER
- 12" SS — PROPOSED STORM SEWER UNDER 15" Ø
- 24" SS — PROPOSED STORM SEWER OVER 15" Ø
- 6" W — PROPOSED WATERMAIN
- W — EXISTING WATERMAIN
- G — EXISTING GAS MAIN
- T — EXISTING TELEPHONE CABLE
- EXISTING DOMESTIC METER VAULT
- EXISTING DOMESTIC WATER SERVICE BOX
- PROPOSED DOMESTIC METER VAULT
- PROPOSED DOMESTIC WATER SERVICE BOX
- PROPOSED VALVE BOX
- EXISTING VALVE BOX
- EXISTING FIRE HYDRANT
- TEMPORARY EASEMENT
- PROPOSED RIGHT OF WAY
- EXISTING RIGHT-OF-WAY

REVISIONS

| NO. | BY | DATE |
|---|---|---|
| 1 | MHP | 1-30-09 |

DESIGNED MHP
DRAWN Les Jenkins
SCALE HOR.: 1" = 5'
DATE May 2006
FIELD BOOK
JOB NO. 06-040A


BAINBRIDGE & ASSOCIATES, INC.
Consulting Engineers
1670 SOUTH TAYLORVILLE ROAD
DECATUR, ILLINOIS
Illinois Licenses 184-001285


# VILLAGE OF OREANA, ILLINOIS

SAFE TEA-LU PROJECT

## TYPICAL SECTIONS - GENERAL NOTES - LEGEND

0 5 10 PLAN

SHEET NO. 6 OF 46

| ROUTE NO. | SECTION | CITY | TOTAL SHEETS | SHEET NO. |
|---|---|---|---|---|
| | 05-00001-00-RP | OREANA | 46 | 7 |
| FED. ROAD DIST. NO. | | ILLINOIS | PROJECT | HPP-0913 (001) |

**CONTRACT NUMBER 95537**

**NOTE:**

Storm Sewer from Lt. 503+57.0 to Lt. 503+79.0, Lt. 503+99.0 to Lt. 503+79.0 and Rt. 503+57.0 to Rt. 503+79.8 shall be Class B, Type 2, Special

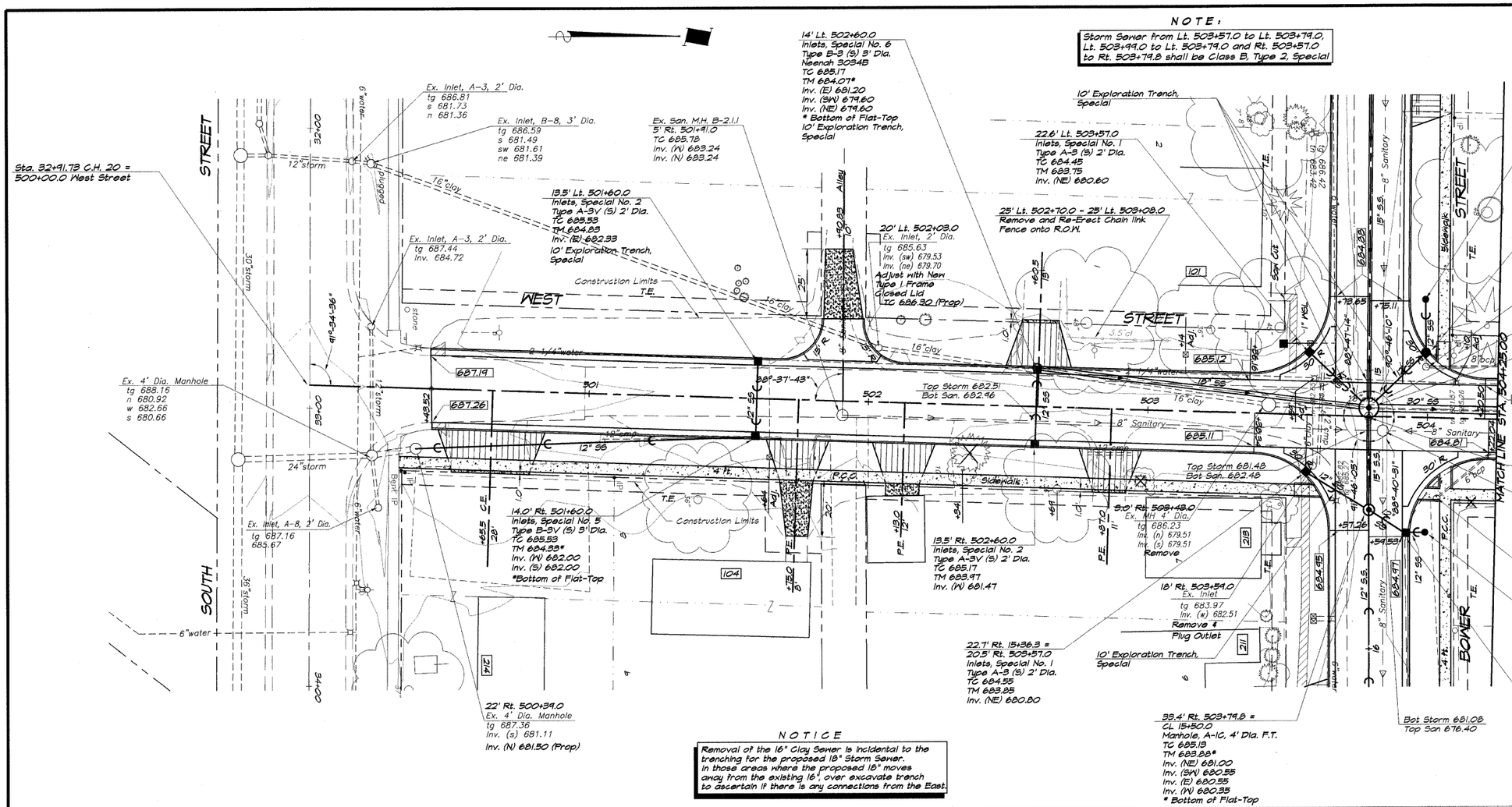


**NOTICE**

Removal of the 16" Clay Sewer is incidental to the trenching for the proposed 18" Storm Sewer. In those areas where the proposed 18" moves away from the existing 16", over excavate trench to ascertain if there is any connections from the East.

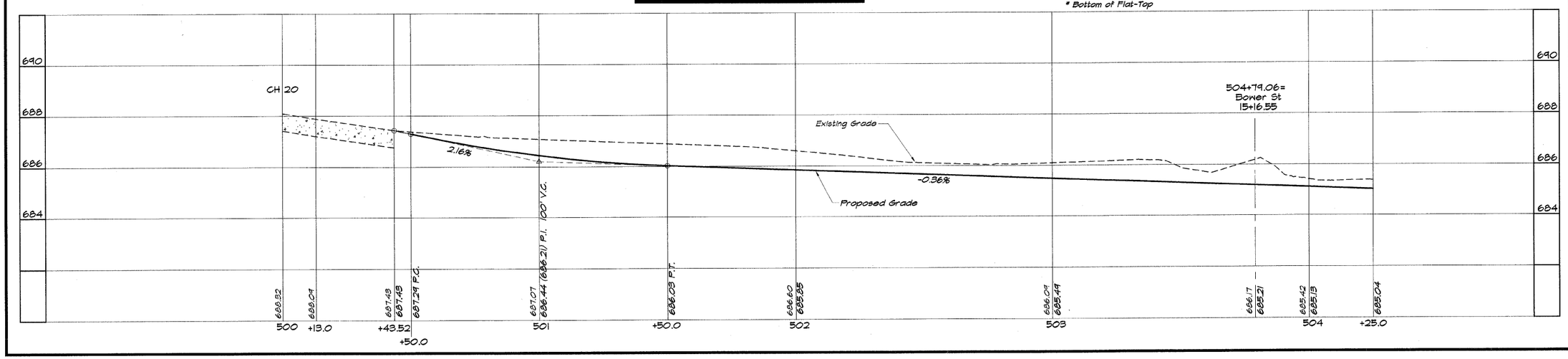


| REVISIONS | | | |
|---|---|---|---|
| NO. | BY | DATE | |
| 1 | MHP | 1-30-08 | |

| | |
|---|---|
| DESIGNED | MHP |
| DRAWN | Les Jenkins |
| SCALE: HOR. 1" = 20' VER. 1" = 2' | |
| DATE | May 2006 |
| JOB NO. | 06-040A |
| FIELD BOOK | 117B |


BRAINBRIDGE & ASSOCIATES, INC.
Consulting Engineers
1670 SOUTH TAYLORVILLE ROAD
DECATUR, ILLINOIS
Illinois License 184-001255


# VILLAGE OF OREANA, ILLINOIS

SAFE TEA - LU PROJECT

## PLAN AND PROFILE
## WEST STREET

STATION 500+43.52 TO 504+25.00

PLAN & PROFILE HORIZONTAL 0 20 40
PROFILE VERTICAL 0 2 4

SHEET NO. 7 OF 46

| ROUTE NO. | SECTION | CITY | TOTAL SHEETS | SHEET NO. |
|---|---|---|---|---|
| | 05-00001-00-RP | OREANA | 46 | 8 |
| FED. ROAD DIST. NO. | | ILLINOIS | PROJECT HPP-0913 (001) | |

**CONTRACT NUMBER 95537**

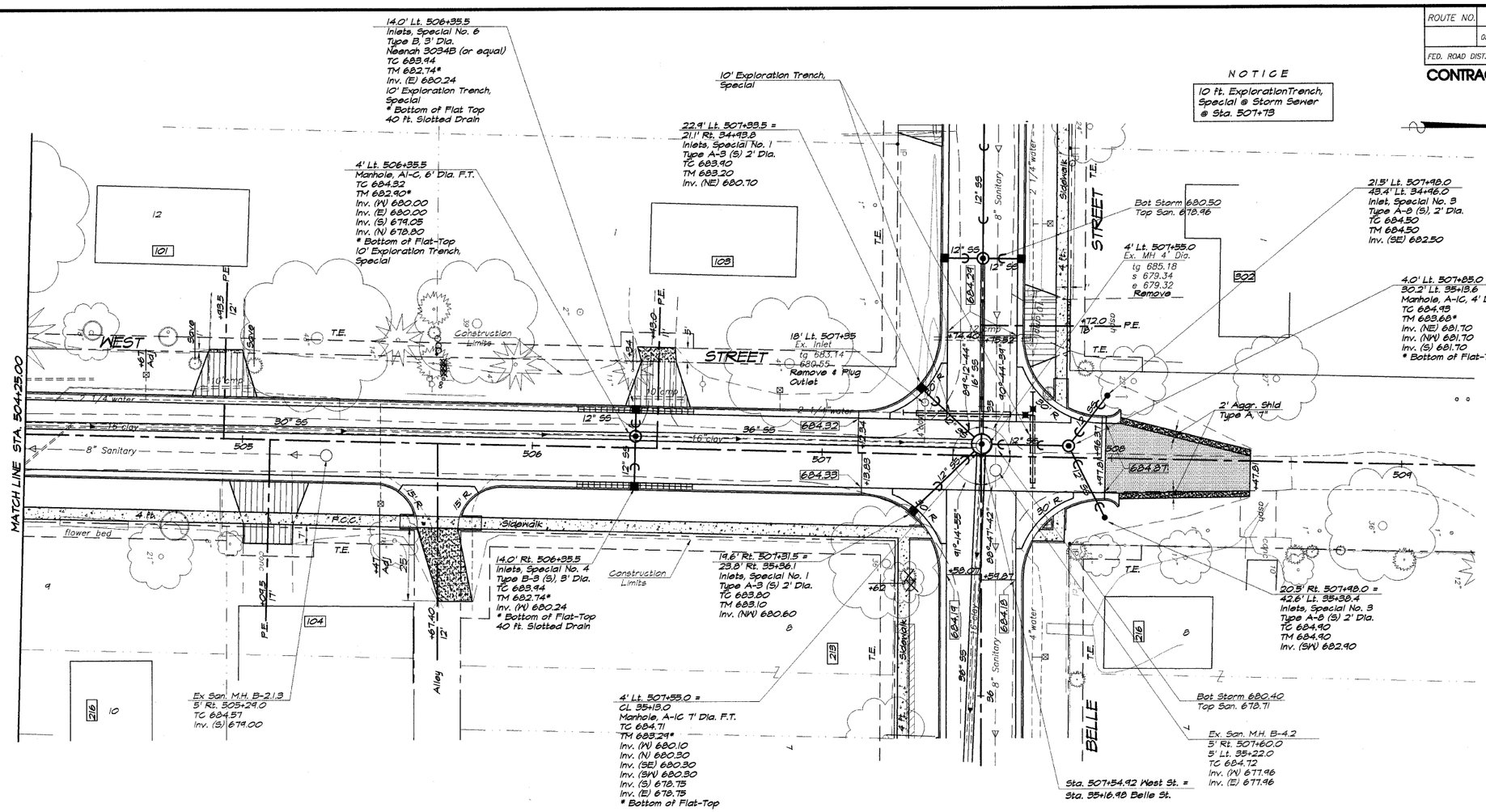


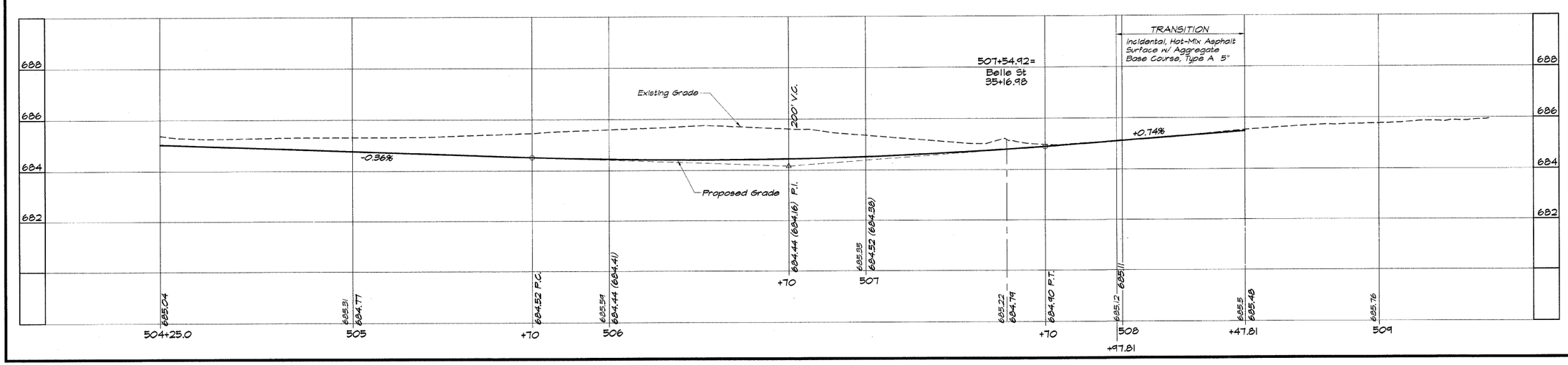


REVISIONS

| NO. | BY | DATE |
|---|---|---|
| 1 | MHP | 1-30-06 |

SCALE: Hor. 1" = 20' Ver. 1" = 2'
DATE: May 2006
JOB NO. 06-040A
DESIGNED: MHP
DRAWN: Les Jenkins
FIELD BOOK: 1178

BAINBRIDGE & ASSOCIATES, INC.
Consulting Engineers
1670 SOUTH TAYLORVILLE ROAD
DECATUR ILLINOIS
Illinois License: 184-001255

# VILLAGE OF OREANA, ILLINOIS

SAFE TEA-LU PROJECT

## PLAN AND PROFILE WEST STREET

STATION 504+25.00 TO 508+47.81

PLAN & PROFILE HORIZONTAL 0 20 40
PROFILE VERTICAL 0 2 4

SHEET NO. 8 OF 46

| ROUTE NO. | SECTION | CITY | TOTAL SHEETS | SHEET NO. |
|---|---|---|---|---|
| | 05-00001-00-RP | OREANA | 46 | 9 |
| FED. ROAD DIST. NO. | | ILLINOIS | PROJECT HPP-0913 (001) | |

**CONTRACT NUMBER 95537**

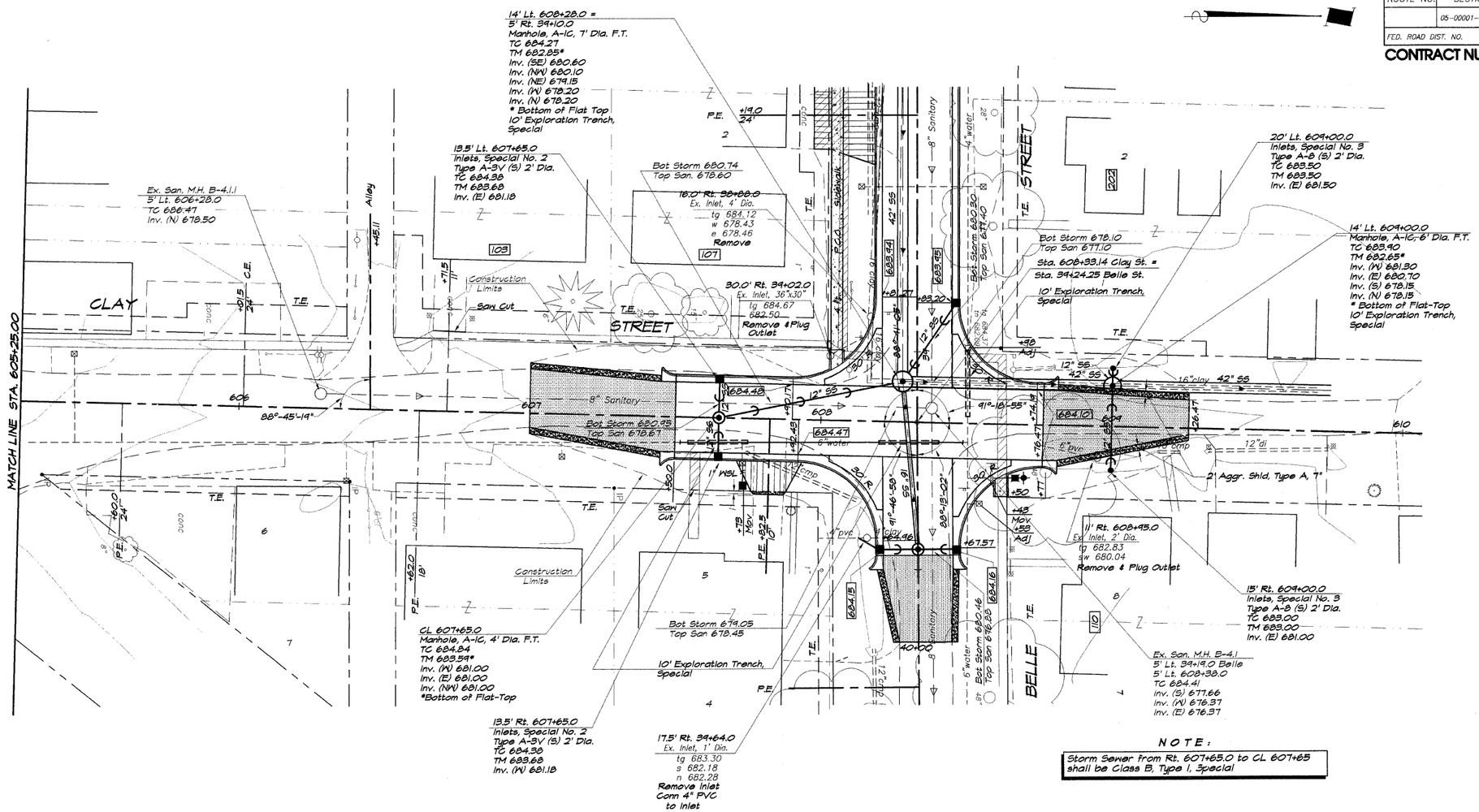


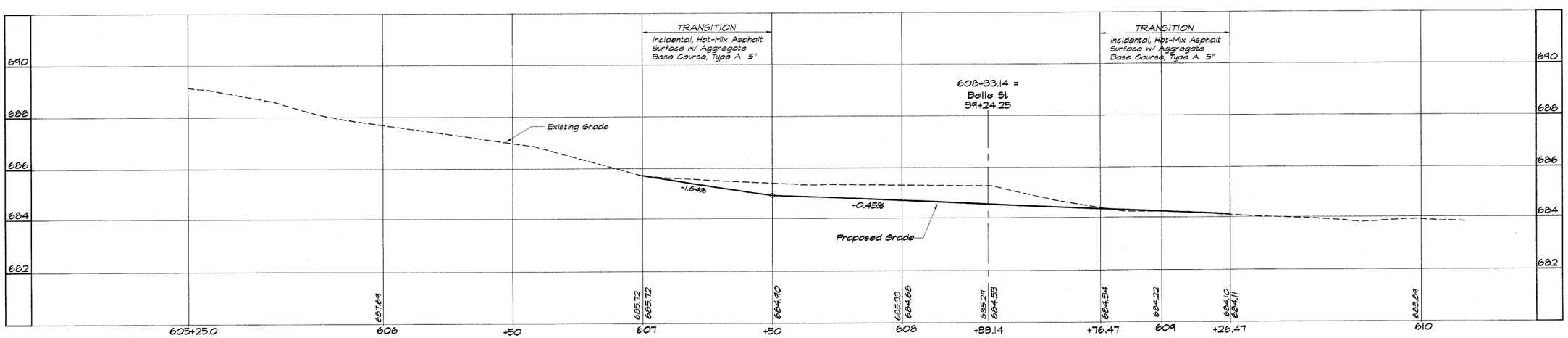


| REVISIONS | | | |
|---|---|---|---|
| NO. | BY | DATE | |
| 1 | MHP | 1-30-04 | |

DESIGNED MHP
DRAWN Les Jenkins
SCALE: Hor. 1" = 20' Ver. 1" = 2'
DATE May 2006
FIELD BOOK 1173
JOB NO. 08-040A

BAINBRIDGE & ASSOCIATES, INC.
Consulting Engineers
1870 SOUTH TAYLORVILLE ROAD
DECATUR, ILLINOIS
Illinois License 184-001826

# VILLAGE OF OREANA, ILLINOIS

SAFE TEA-LU PROJECT

## PLAN AND PROFILE CLAY STREET

STATION 605+25.00 TO 608+26.47

PLAN & PROFILE HORIZONTAL 0 20 40
PROFILE VERTICAL 0 2 4

SHEET NO. 9 OF 46

| ROUTE NO. | SECTION | CITY | TOTAL SHEETS | SHEET NO. |
|---|---|---|---|---|
| | 05-00001-00-RP | OREANA | 46 | 10 |
| FED. ROAD DIST. NO. | | ILLINOIS | PROJECT HPP-0913 (001) | |

**CONTRACT NUMBER 95537**

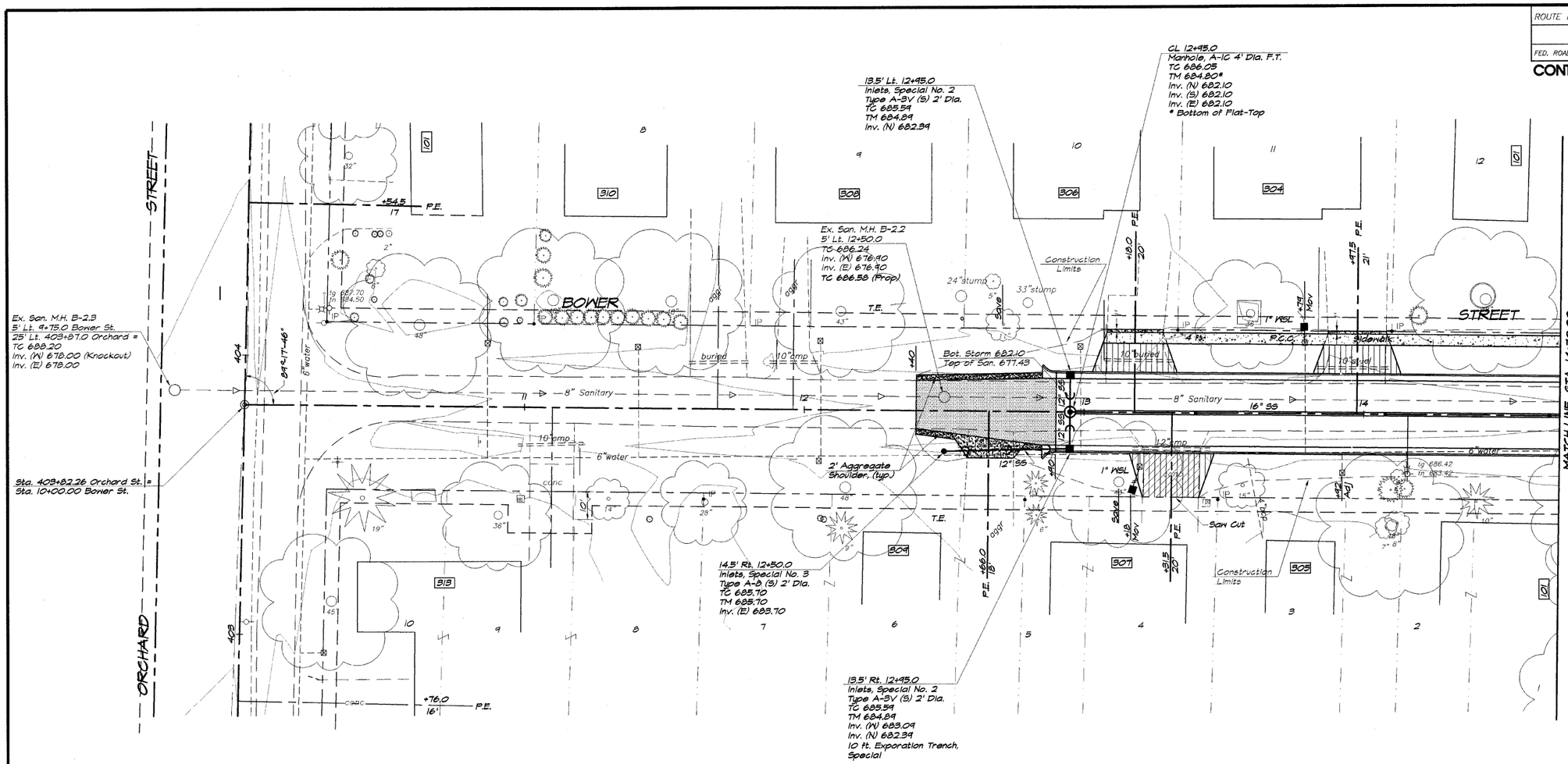


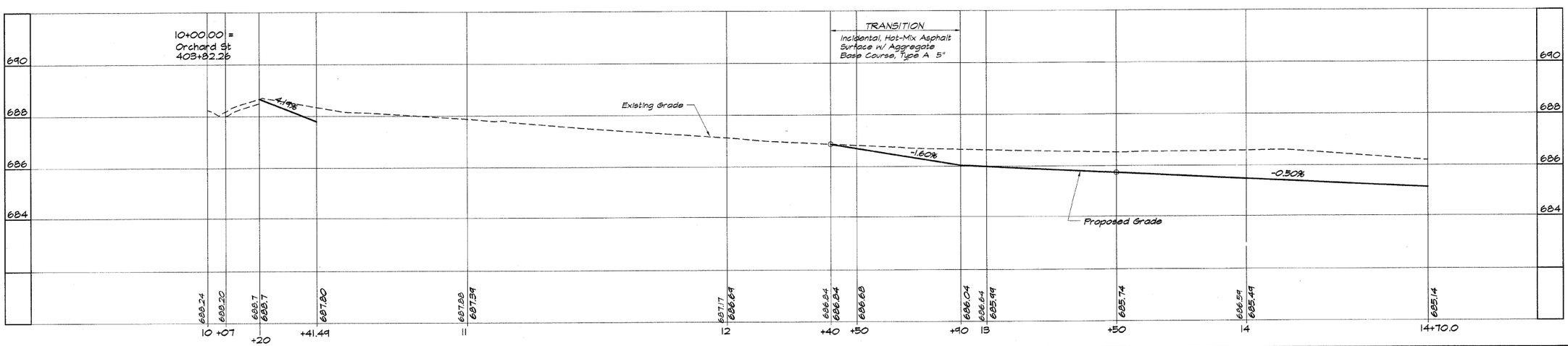


REVISIONS

| NO. | BY | DATE |
|---|---|---|
| 1 | MHP | 1-30-09 |

SCALE Hor. 1" = 20' Ver. 1" = 2'
DATE May 2006
JOB NO. 06-040A
DESIGNED MHP
DRAWN Lee Jenkins
FIELD BOOK 1173

BAINBRIDGE & ASSOCIATES, INC.
Consulting Engineers
1870 SOUTH TAYLORVILLE ROAD
DECATUR ILLINOIS
Illinois License 184-001265

# VILLAGE OF OREANA, ILLINOIS

SAFE TEA-LU PROJECT

## PLAN AND PROFILE BOWER STREET

STATION 10+00.00 TO 14+70.00

PLAN & PROFILE HORIZONTAL 0 20 40
PROFILE VERTICAL 0 2 4

SHEET NO. 10 OF 46

| ROUTE NO. | SECTION | CITY | TOTAL SHEETS | SHEET NO. |
|---|---|---|---|---|
| | 05-00001-00-RP | OREANA | 46 | 11 |
| FED. ROAD DIST. NO. | | ILLINOIS | PROJECT HPP-0913 (001) | |

**CONTRACT NUMBER 95537**

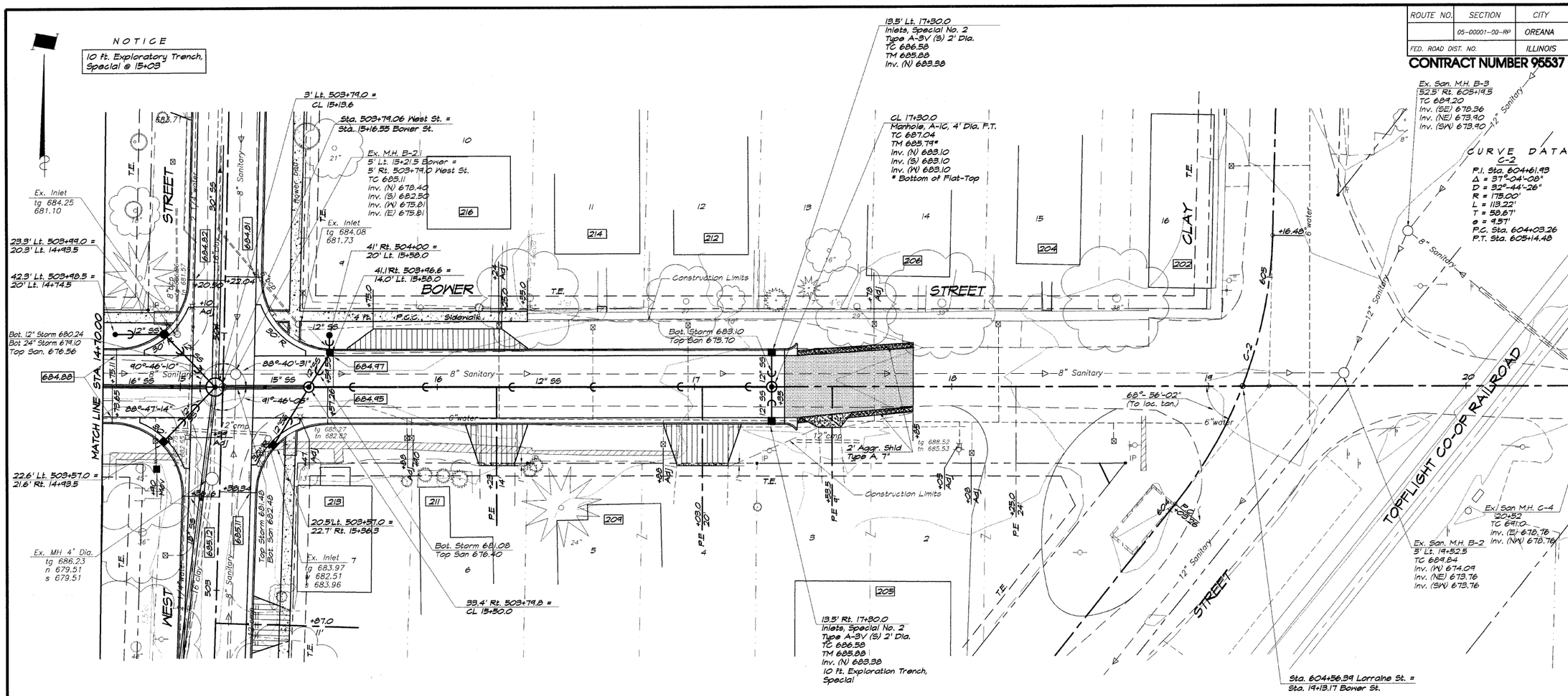


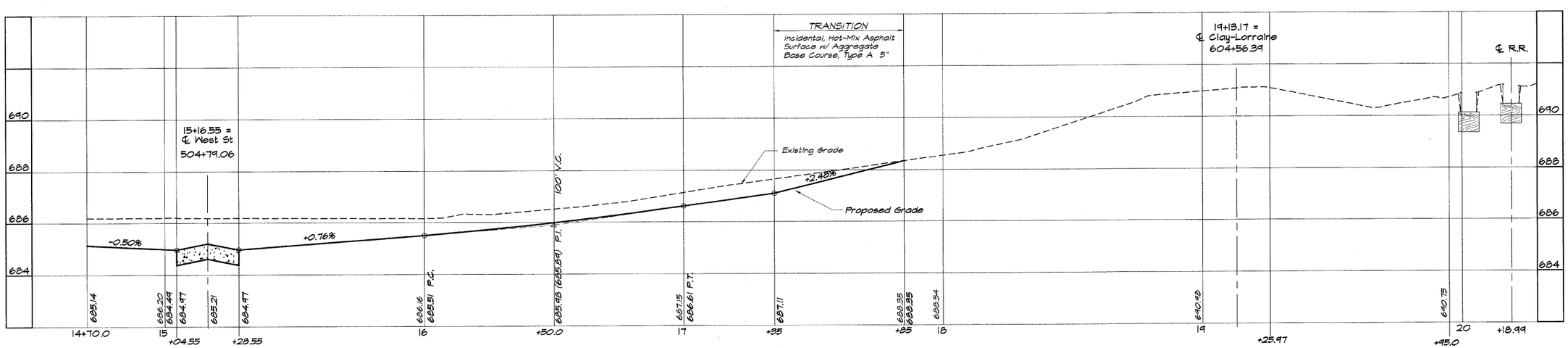


REVISIONS

| NO. | BY | DATE |
|---|---|---|
| 1 | MHP | 1-30-09 |

SCALE Hor. 1" = 20' Ver. 1" = 2'
DATE May 2006
JOB NO. 06-040A
DESIGNED MHP
DRAWN Les Jenkins
FIELD BOOK 117B

BAINBRIDGE & ASSOCIATES, INC.
Consulting Engineers
1670 SOUTH TAYLORVILLE ROAD
DECATUR ILLINOIS
Illinois License 184-001255

# VILLAGE OF OREANA, ILLINOIS

SAFE TEA - LU PROJECT

## PLAN AND PROFILE BOWER STREET

STATION 14+70.00 TO 19+95.00

PLAN & PROFILE HORIZONTAL 0 20 40
PROFILE VERTICAL 0 2 4

SHEET NO. 11 OF 46

| ROUTE NO. | SECTION | CITY | TOTAL SHEETS | SHEET NO. |
|---|---|---|---|---|
| | 05-00001-00-RP | OREANA | 46 | 12 |
| FED. ROAD DIST. NO. | | ILLINOIS | PROJECT HPP-0913 (001) | |

**CONTRACT NUMBER 95537**

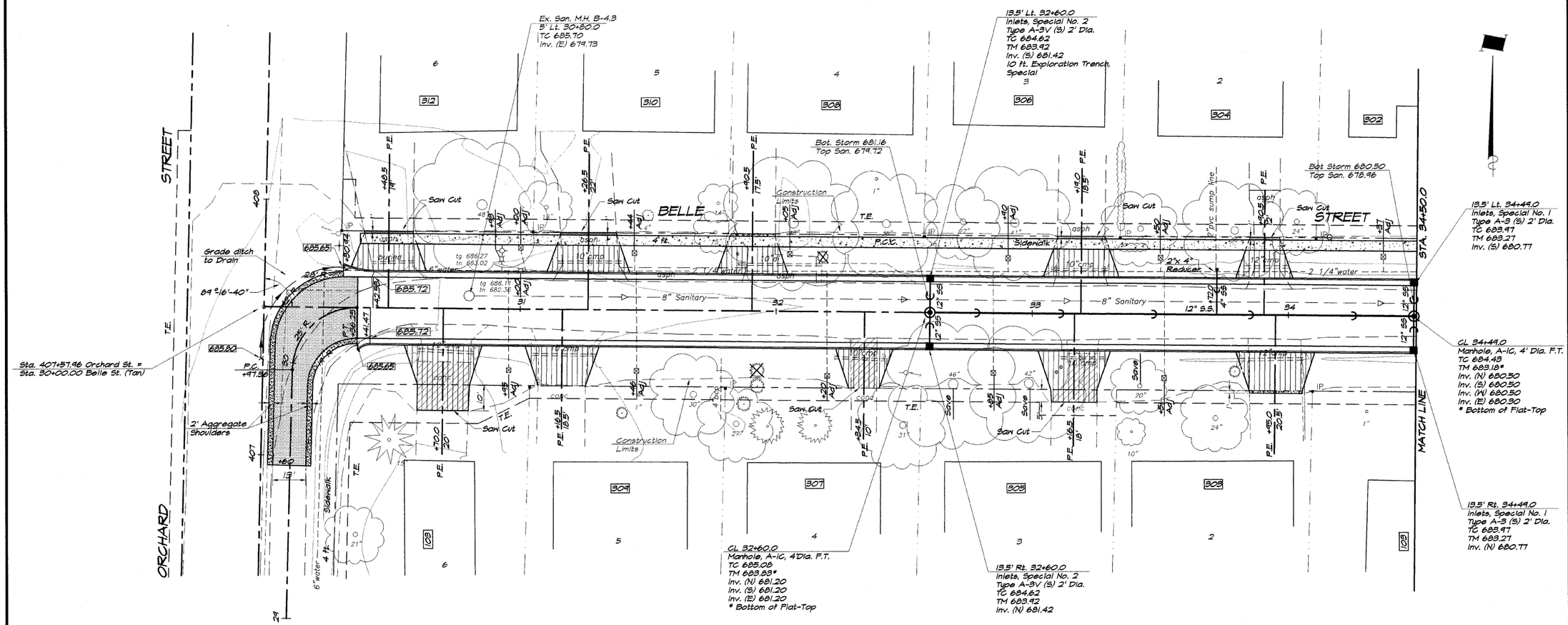


| REVISIONS | | | |
|---|---|---|---|
| NO. | BY | DATE | |
| 1 | MHP | 1-30-04 | |

DESIGNED MHP
DRAWN Les Jenkins
SCALE Hor. 1" = 20' Ver. 1" = 2'
DATE May 2006
JOB NO. C6-040A
FIELD BOOK 1173

BANBRIDGE & ASSOCIATES, INC.
Consulting Engineers
1870 SOUTH TAYLORVILLE ROAD
DECATUR ILLINOIS
Illinois License 184-001226

# VILLAGE OF OREANA, ILLINOIS

SAFE TEA-LU PROJECT

## PLAN AND PROFILE BELLE STREET

STATION 29+50.00 TO 34+50.00

PLAN & PROFILE HORIZONTAL 0 20 40
PROFILE VERTICAL 0 2 4

SHEET NO. 12 OF 46

| ROUTE NO. | SECTION | CITY | TOTAL SHEETS | SHEET NO. |
|---|---|---|---|---|
| | 05-00001-00-RP | OREANA | 46 | 13 |
| FED. ROAD DIST. NO. | | ILLINOIS | PROJECT HPP-0913 (001) | |

**CONTRACT NUMBER 95537**

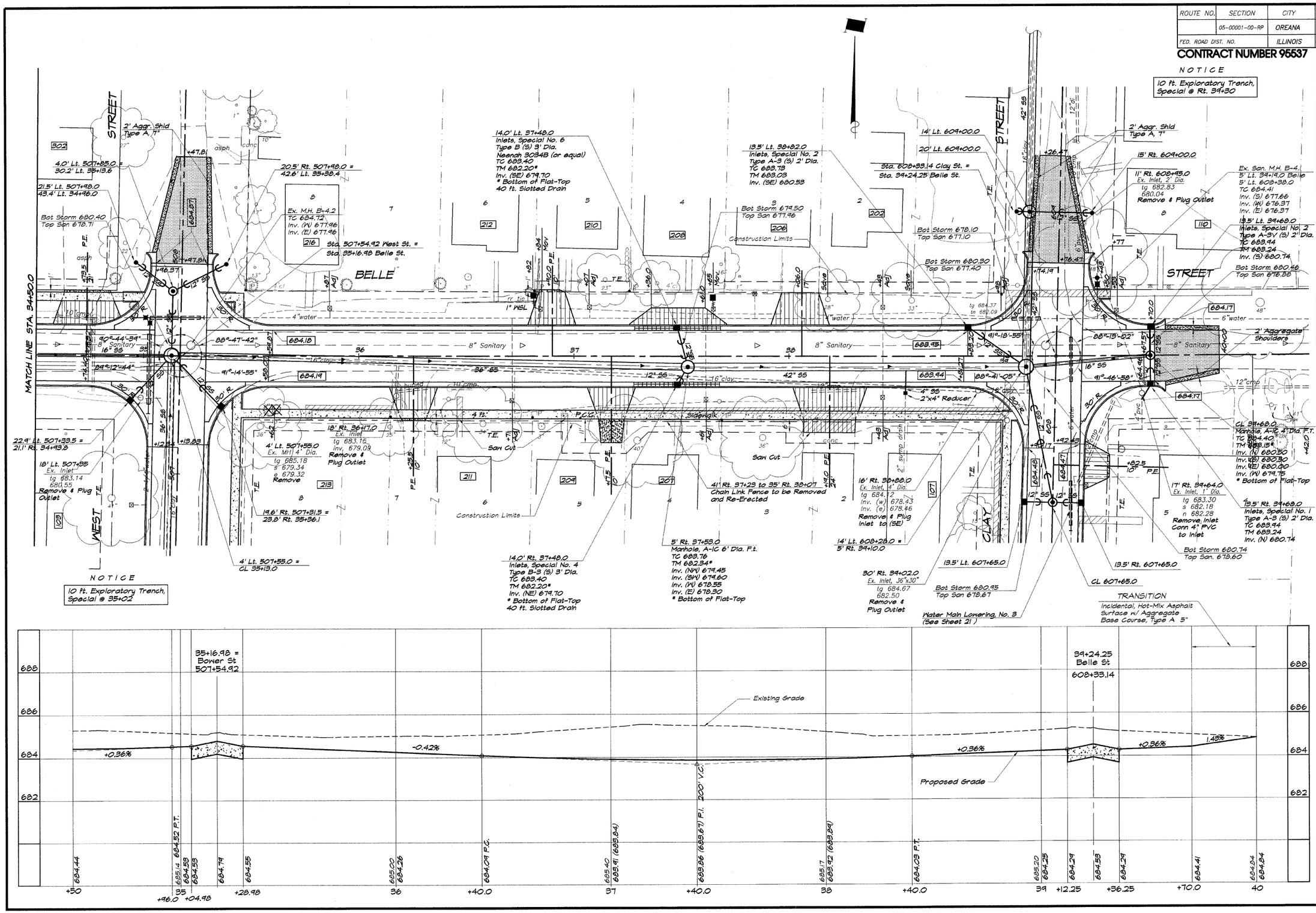


| REVISIONS | | | |
|---|---|---|---|
| NO. | BY | DATE | |
| 1 | MHP | 1-30-04 | |
| 2 | MHP | 11-08-04 | |

SCALE: Hor. 1" = 20' Ver. 1" = 2'
DESIGNED MHP
DRAWN Lee Jenkins
DATE May 2006
JOB NO. 08-040A
FIELD BOOK 1178


HANBRIDGE & ASSOCIATES, INC.
Consulting Engineers
1670 SOUTH TAYLORVILLE ROAD
DECATUR, ILLINOIS
Illinois License 184-001255


# VILLAGE OF OREANA, ILLINOIS

SAFE TEA-LU PROJECT

## PLAN AND PROFILE BELLE STREET

STATION 34+50.00 TO 40+00.00

PLAN & PROFILE HORIZONTAL 0 20 40
PROFILE VERTICAL 0 2 4

SHEET NO. 13 OF 46

| ROUTE NO. | SECTION | CITY | TOTAL SHEETS | SHEET NO. |
|---|---|---|---|---|
| | 00-00001-00-RP | OREANA | 46 | 14 |
| FED. ROAD DIST. NO. | ILLINOIS | PROJECT HPP-0813 (001) | | |

**CONTRACT NUMBER 95537**

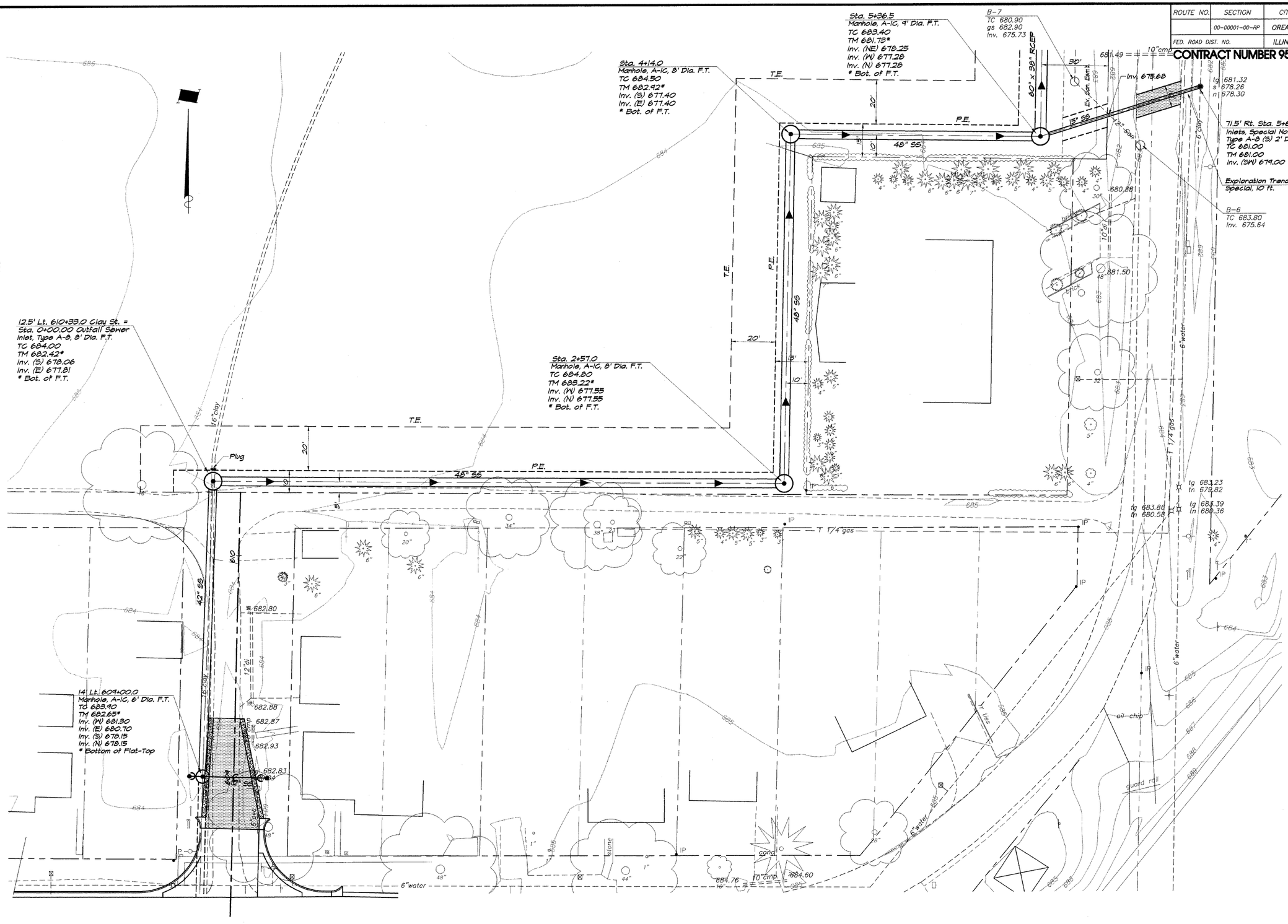


REVISIONS

| NO. | BY | DATE |
|---|---|---|
| 1 | MHP | 4-4-07 |

SCALE Hor. 1" = 20'
DATE Feb. 2004
JOB NO. 08-040X
DESIGNED MHP
DRAWN Les Jenkins
FIELD BOOK XXX

BAINBRIDGE & ASSOCIATES, INC.
Consulting Engineers
1870 SOUTH TAYLORVILLE ROAD
DECATUR ILLINOIS
Illinois License 184-001255

# VILLAGE OF OREANA, ILLINOIS

SAFE TEA-LU PROJECT

## OUTLET SEWER PROFILE

STATION 609+00.00 TO 14+68.00

PLAN & PROFILE HORIZONTAL 0 20 40
PROFILE VERTICAL 0 5 10

SHEET NO. 14 OF 46

| ROUTE NO. | SECTION | CITY | TOTAL SHEETS | SHEET NO. |
|---|---|---|---|---|
| | 00-00001-00-RP | OREANA | 46 | 15 |
| FED. ROAD DIST. NO. | | ILLINOIS | PROJECT HPP-0913 (001) | |

**CONTRACT NUMBER 95537**

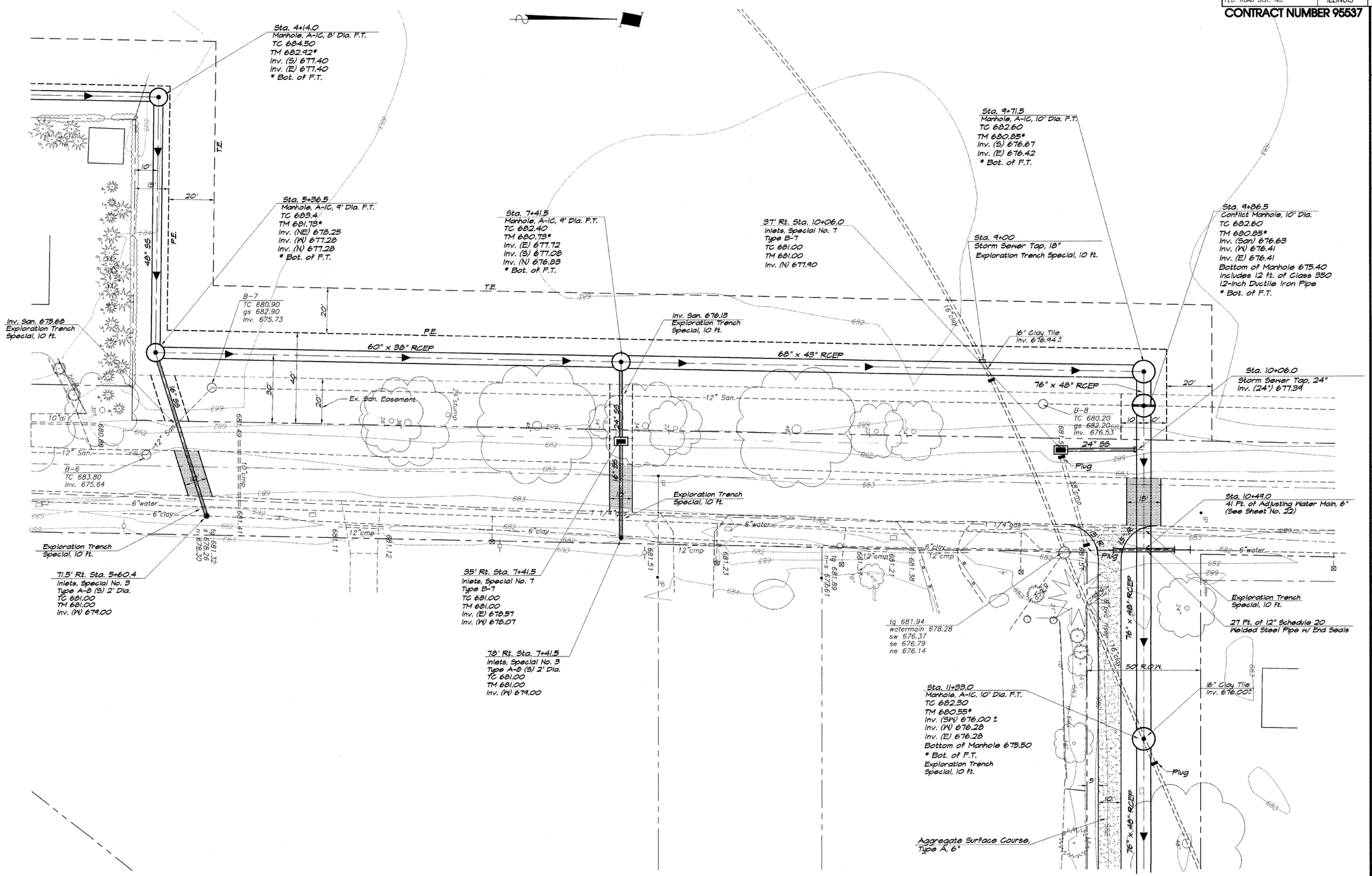


| REVISIONS | | | |
|---|---|---|---|
| NO. | BY | DATE | |
| 1 | MMP | 4-14-09 | |
| 2 | MMP | 11-06-09 | |

| | |
|---|---|
| SCALE | Hor. 1" = 20' |
| DATE | Feb. 2009 |
| JOB NO. | 08-040X |
| DESIGNED | MMP |
| DRAWN | Lee Jenkins |
| FIELD BOOK | XXX |


BLANKENBRIDGE & ASSOCIATES, INC.
Consulting Engineers
1870 SOUTH TAYLORVILLE ROAD
DECATUR ILLINOIS
Illinois License 184-001255


# VILLAGE OF OREANA, ILLINOIS

SAFE TEA-LU PROJECT

## OUTLET SEWER PROFILE

STATION 609+00.00 TO 14+68.00

PLAN & PROFILE HORIZONTAL 0 20 40

PROFILE VERTICAL 0 5 10

SHEET NO. 15 OF 46

| ROUTE NO. | SECTION | CITY | TOTAL SHEETS | SHEET NO. |
|---|---|---|---|---|
| | 00-00001-00-RP | OREANA | 46 | 16 |
| FED. ROAD DIST. NO. | | ILLINOIS | PROJECT | HPP-0813 (001) |

**CONTRACT NUMBER 95537**

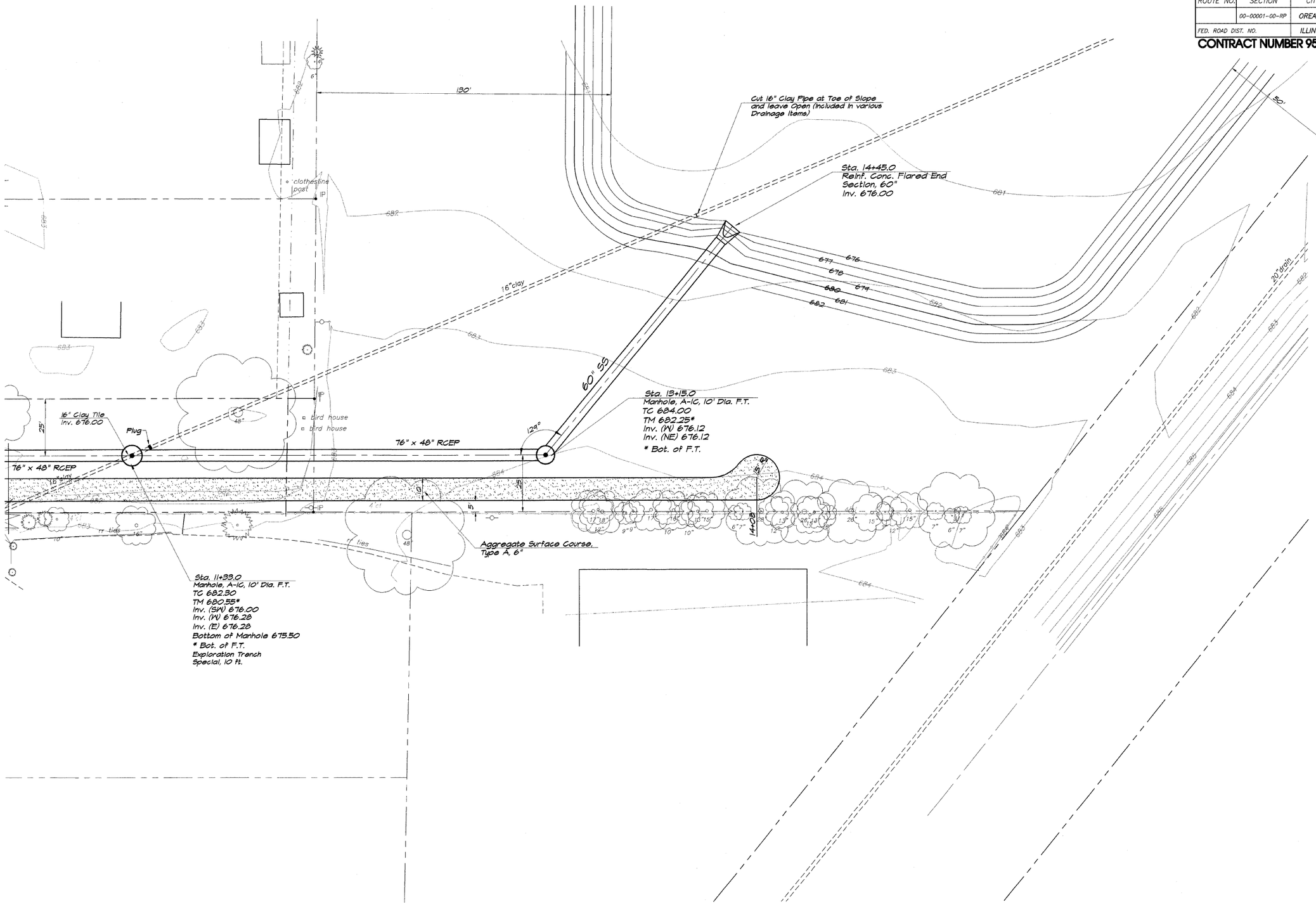


REVISIONS

| NO. | BY | DATE |
|---|---|---|
| 1 | MMP | 4-1-09 |
| 2 | MMP | 11-06-09 |

| | | |
|---|---|---|
| DESIGNED MMP | SCALE Hor. 1" = 20' | |
| DRAWN Lee Jenkins | DATE Feb. 2009 | |
| FIELD BOOK XXX | JOB NO. 06-040X | |

BAINBRIDGE & ASSOCIATES, INC.
Consulting Engineers
1670 SOUTH TAYLORVILLE ROAD
DECATUR, ILLINOIS
Illinois License 184-001255

# VILLAGE OF OREANA, ILLINOIS

SAFE TEA - LU PROJECT

## OUTLET SEWER PROFILE

STATION 609+00.00 TO 13+85.0

PLAN & PROFILE HORIZONTAL 0 20 40

PROFILE VERTICAL 0 5 10

SHEET NO. 16 OF 46

| ROUTE NO. | SECTION | CITY | TOTAL SHEETS | SHEET NO. |
|---|---|---|---|---|
| | 00-00001-00-RP | OREANA | 46 | 17 |
| FED. ROAD DIST. NO. | | ILLINOIS | PROJECT HPP-0913 (001) | |

**CONTRACT NUMBER 95537**

NOTE: 24" S.S. from Sta. 100+00.0 to Sta. 100+74.0 shall be Reinforced Concrete Storm Drain in accordance with Section 1042 of the Standard Specifications. The joint shall be a Rubber Gasket. Payment shall be for Storm Sewer, Class B, Type 1, 24"

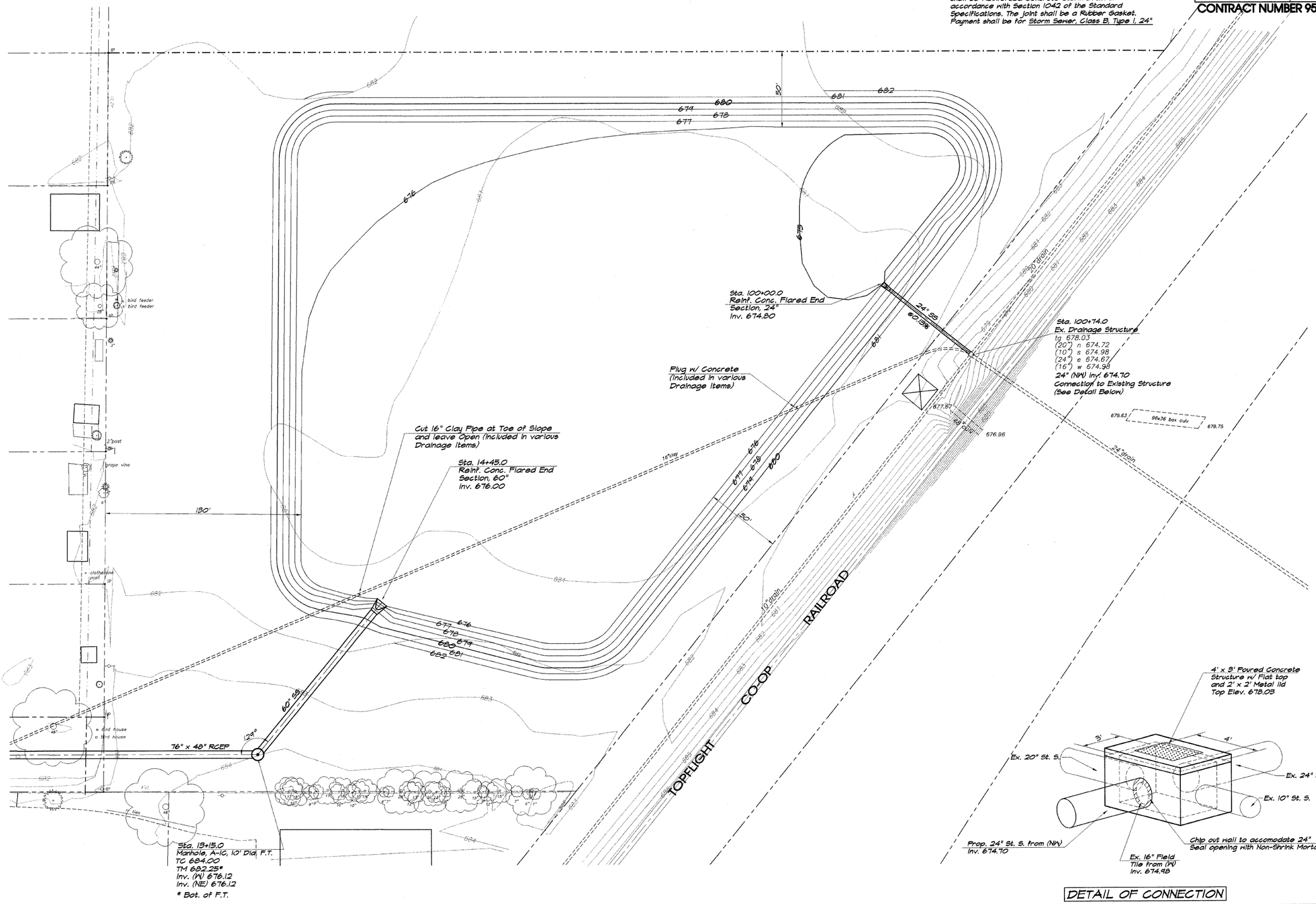


DETAIL OF CONNECTION

REVISIONS

| NO. | BY | DATE |
|---|---|---|
| 1 | MHP | 4-2-09 |
| 2 | MHP | 11-06-09 |

SCALE: Hor. 1" = 30'
DATE: Feb. 2009
JOB NO. 06-040A0X
DESIGNED: MHP
DRAWN: Les Jenkins
FIELD BOOK: 177C

BAINBRIDGE GHE MIEANSKI & ASSOCIATES, INC.
Consulting Engineers
1670 SOUTH TAYLORVILLE ROAD
DECATUR ILLINOIS
Illinois License 184-001255

# VILLAGE OF OREANA, ILLINOIS
SAFE TEA - LU PROJECT

## OUTLET SEWER PROFILE
STATION 609+00.00 TO 13+95.0

PLAN & PROFILE HORIZONTAL: 0 20 40
PROFILE VERTICAL: 0 5 10

SHEET NO. 17 OF 46

| ROUTE NO. | SECTION | CITY | TOTAL SHEETS | SHEET NO. |
|---|---|---|---|---|
| | 00-00001-00-RP | OREANA | 46 | 18 |
| FED. ROAD DIST. NO. | | ILLINOIS | PROJECT HPP-0813 (001) | |

**CONTRACT NUMBER 95537**

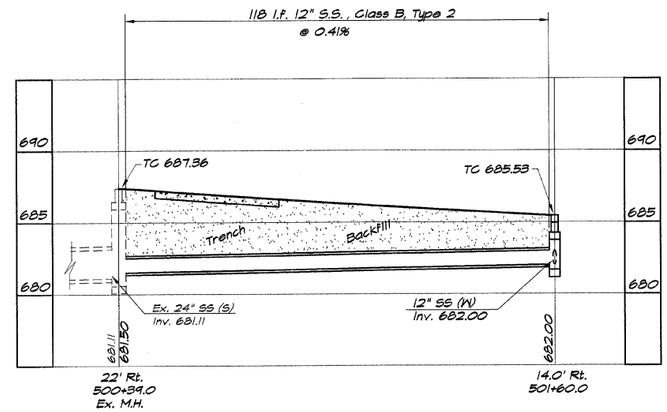


WEST STREET

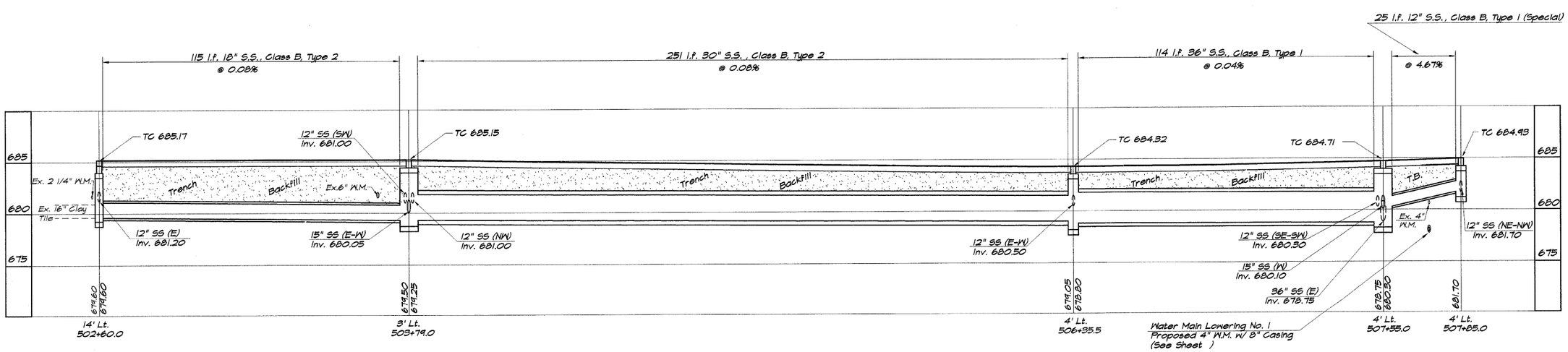


WEST STREET

| REVISIONS | | |
|---|---|---|
| NO. | BY | DATE |
| | | |

| | |
|---|---|
| DESIGNED MHP | SCALE Hor. 1" = 20' Ver. 1" = 5' |
| DRAWN Les Jenkins | DATE May 2006 |
| FIELD BOOK XXX | JOB NO. 06-040A |

BANBRIDGE & ASSOCIATES, INC.
Consulting Engineers
1670 SOUTH TAYLORVILLE ROAD
DECATUR, ILLINOIS
Illinois License 184-001225

# VILLAGE OF OREANA, ILLINOIS

SAFE TEA-LU PROJECT

## STORM SEWER PROFILE

STATION 00+00.00 TO 00+00.00

PLAN & PROFILE HORIZONTAL 0 20 40

PROFILE VERTICAL 0 5 10

SHEET NO. 18 OF 46

| ROUTE NO. | SECTION | CITY | TOTAL SHEETS | SHEET NO. |
|---|---|---|---|---|
| | 00-00001-00-RP | OREANA | 46 | 19 |
| FED. ROAD DIST. NO. | | ILLINOIS | PROJECT HPP-0913 (001) | |

**CONTRACT NUMBER 95537**

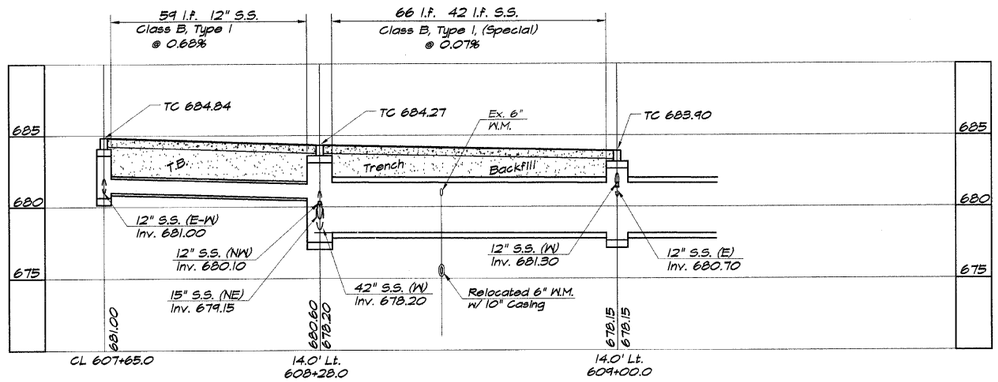


CLAY STREETS

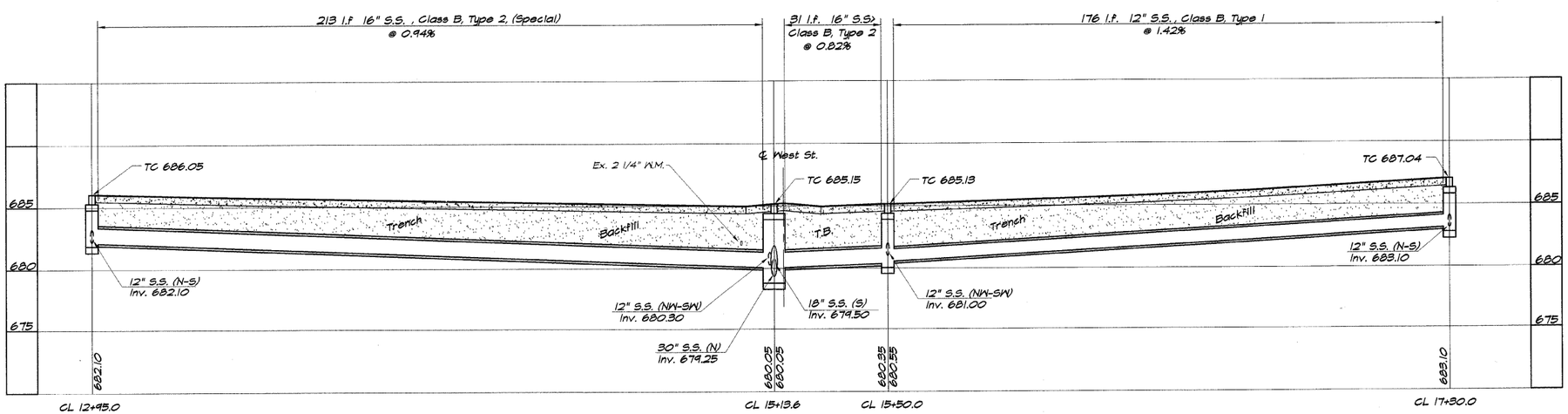


BOWER STREETS

REVISIONS

| NO. | BY | DATE |
|---|---|---|
| 1 | MHP | 11-06-09 |

DESIGNED MHP
DRAWN Les Jenkins
DATE May 2006
SCALE Hor. 1" = 20' Ver. 1" = 5'
FIELD BOOK XXX
JOB NO. 06-040A

BANBRIDGE & ASSOCIATES, INC.
Consulting Engineers
1670 SOUTH TAYLORVILLE ROAD
DECATUR, ILLINOIS
Illinois License 184-001255

VILLAGE OF OREANA, ILLINOIS
SAFE TEA - LU PROJECT

STORM SEWER PROFILE
STATION 00+00.00 TO 00+00.00

PLAN & PROFILE HORIZONTAL 0 20 40
PROFILE VERTICAL 0 5 10

SHEET NO. 19 OF 46

| ROUTE NO. | SECTION | CITY | TOTAL SHEETS | SHEET NO. |
|---|---|---|---|---|
| | 00-00001-00-RP | OREANA | 46 | 20 |
| FED. ROAD DIST. NO. | | ILLINOIS | PROJECT HPP-0913 (001) | |

**CONTRACT NUMBER 95537**

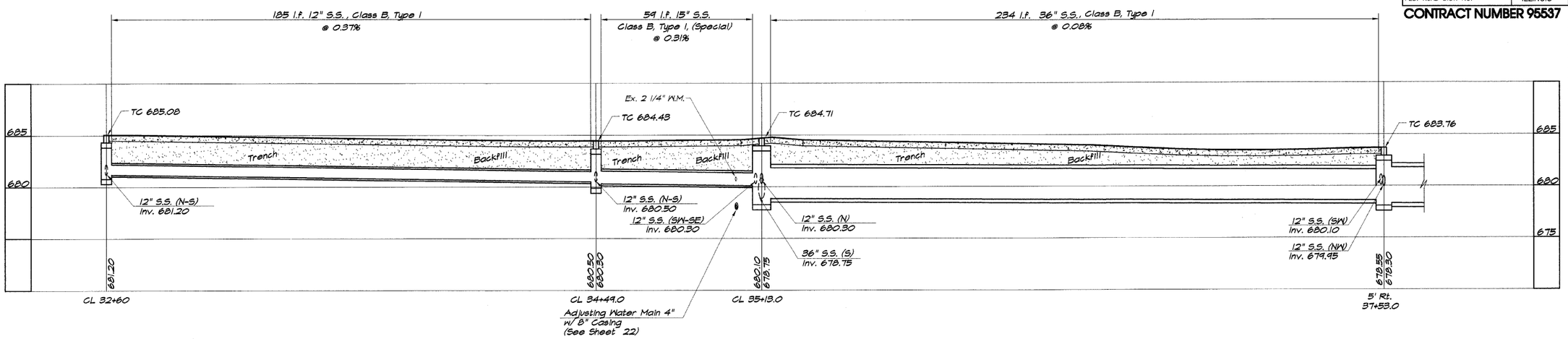


BELLE STREETS

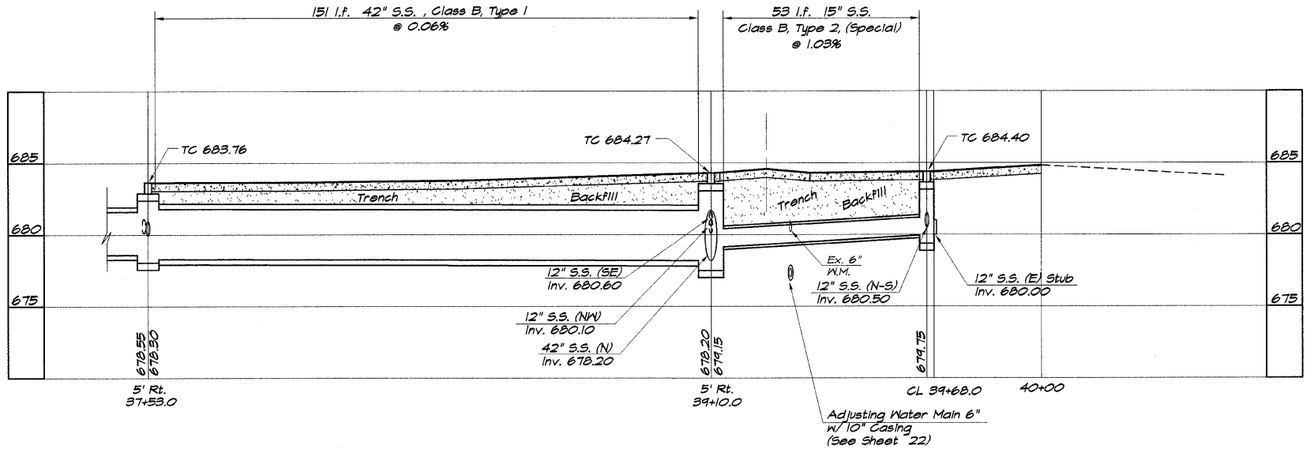


BELLE STREETS

REVISIONS

| NO. | BY | DATE |
|---|---|---|
| 1 | MHP | 11-06-09 |

DESIGNED MHP
DRAWN Les Jenkins
SCALE Hor. 1" = 20' Ver. 1" = 5'
DATE May 2006
FIELD BOOK XXX
JOB NO. 06-040A

BAINBRIDGE GEE & ASSOCIATES, INC.
MILANSKI
Consulting Engineers
1670 SOUTH TAYLORVILLE ROAD
DECATUR ILLINOIS
Illinois License 184001255

**VILLAGE OF OREANA, ILLINOIS**
SAFE TEA - LU PROJECT

**STORM SEWER PROFILE**
STATION 00+00.00 TO 00+00.00

PLAN & PROFILE HORIZONTAL 0 20 40
PROFILE VERTICAL 0 5 10

SHEET NO. 20 OF 46

| ROUTE NO. | SECTION | CITY | TOTAL SHEETS | SHEET NO. |
|---|---|---|---|---|
| | 00-00001-00-RP | OREANA | 46 | 21 |
| FED. ROAD DIST. NO. | | ILLINOIS | PROJECT HPP-0813 (001) | |

**CONTRACT NUMBER 95537**

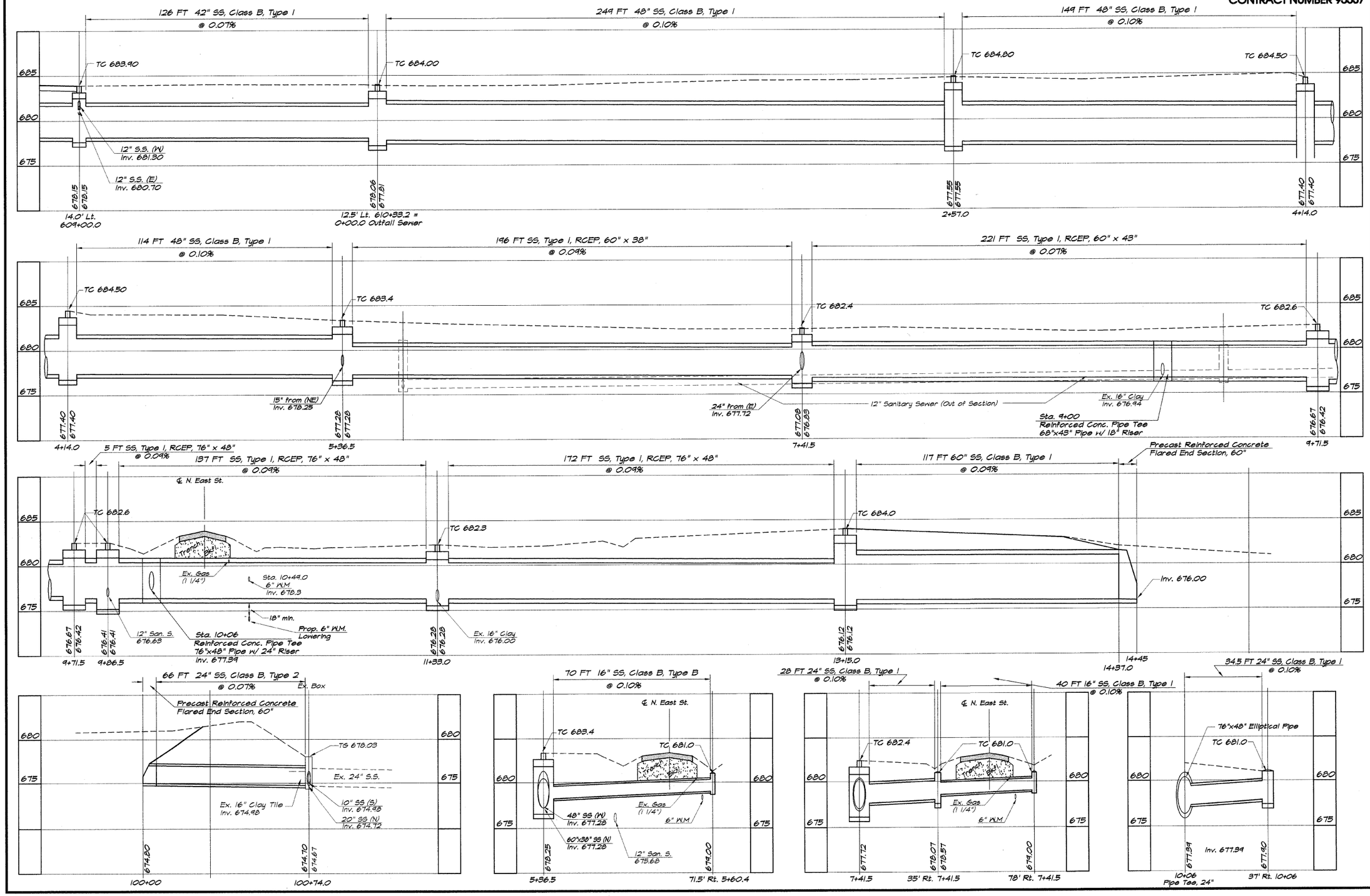


| REVISIONS | | | |
|---|---|---|---|
| NO. | BY | DATE | |
| 1 | MHP | 4-1-09 | |

SCALE: Hor. 1" = 20' Ver. 1" = 5'
DATE Feb. 2009
JOB NO. 06-040X
DESIGNED MHP
DRAWN Les Jenkins
FIELD BOOK xxx

BANBRIDGE & ASSOCIATES, INC.
Consulting Engineers
1870 SOUTH TAYLORVILLE ROAD
DECATUR, ILLINOIS
Illinois License 184-001255

# VILLAGE OF OREANA, ILLINOIS

SAFE TEA - LU PROJECT

## OUTFALL SEWER PROFILE

STATION 609+00.00 TO 14+98.00

PLAN & PROFILE HORIZONTAL 0 20 40
PROFILE VERTICAL 0 5 10

SHEET NO. 21 OF 46

| ROUTE NO. | SECTION | CITY | TOTAL SHEETS | SHEET NO. |
|---|---|---|---|---|
| | 05-00001-00-RP | OREANA | 46 | 22 |
| FED. ROAD DIST. NO. | | ILLINOIS | PROJECT HPP-0913 (001) | |

**CONTRACT NUMBER 95537**

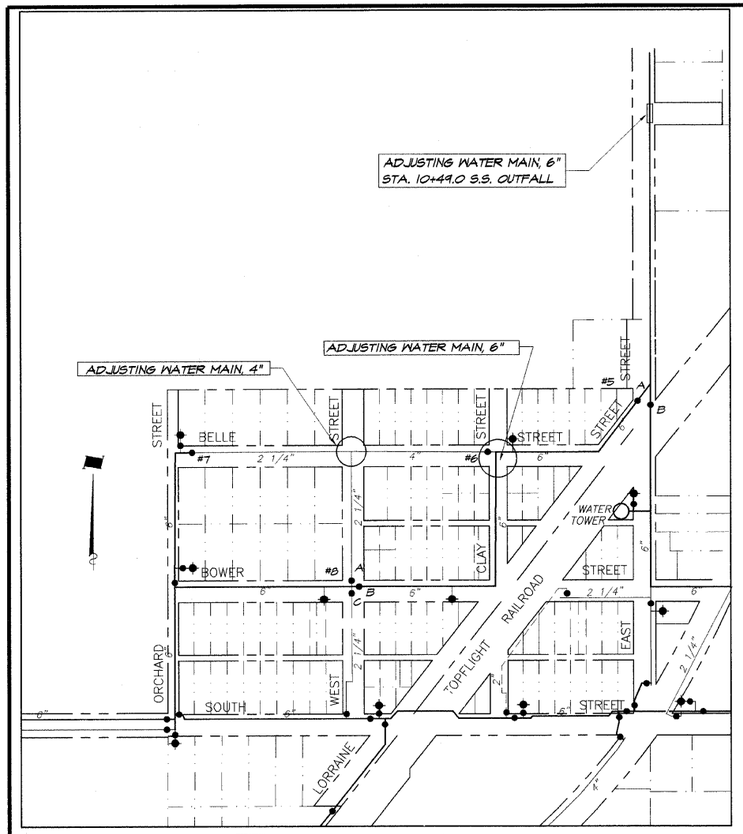


VALVE LOCATIONS

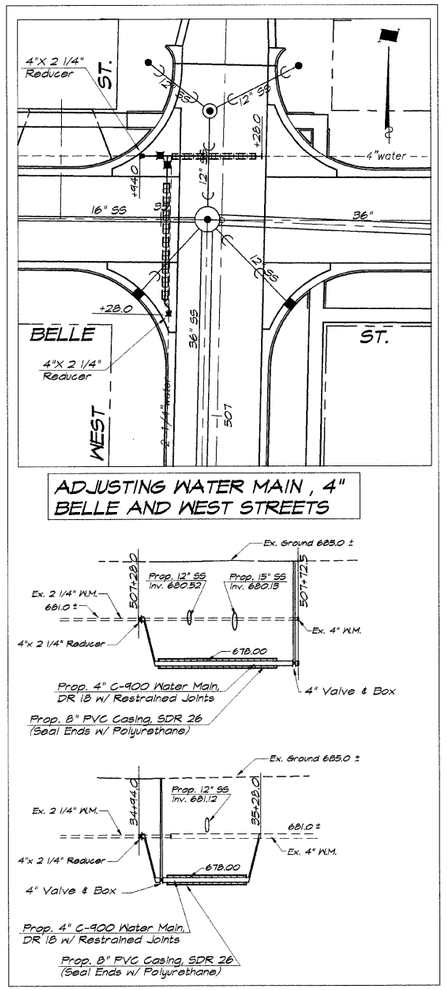


ADJUSTING WATER MAIN, 4"
BELLE AND WEST STREETS

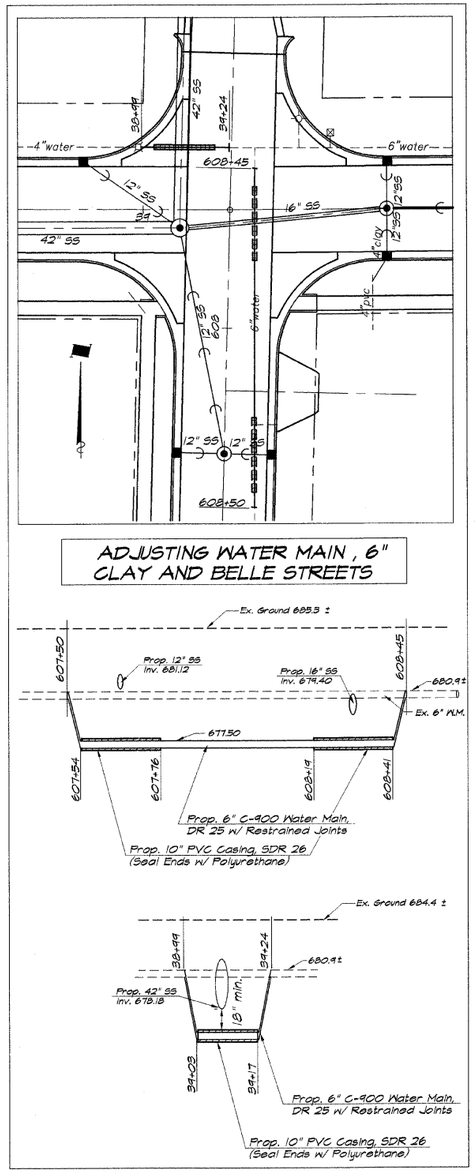


ADJUSTING WATER MAIN, 6"
CLAY AND BELLE STREETS

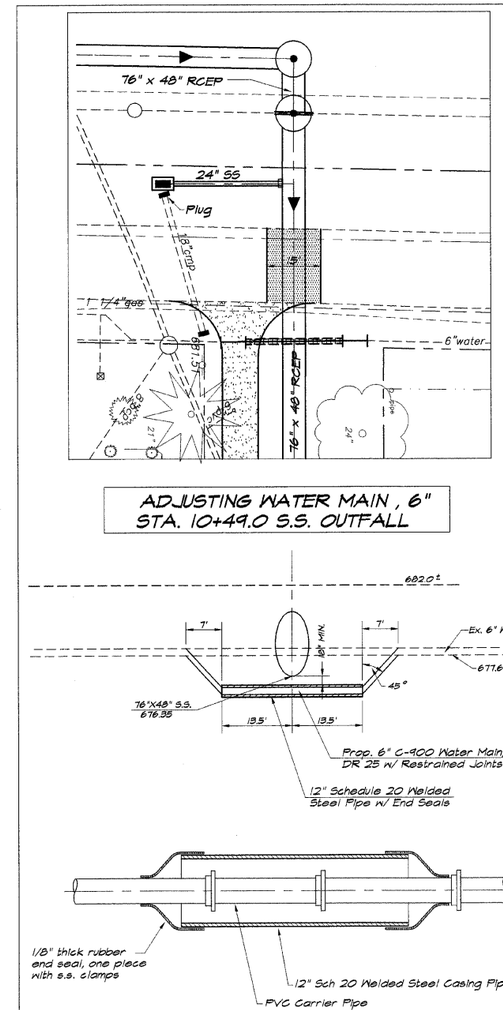


ADJUSTING WATER MAIN, 6"
STA. 10+49.0 S.S. OUTFALL

STANDARD DESIGN CASING END SEALS

| REVISIONS | | | |
|---|---|---|---|
| NO. | BY | DATE | |
| 1 | MAP | 1-30-04 | |
| 2 | MAP | 4-4-04 | |

DESIGNED MAP
DRAWN Lee Jenkins
SCALE: Hor. 1" = 20' Ver. 1" = 2'
DATE May 2006
JOB NO. 08-040A
FIELD BOOK XXX

BAINBRIDGE GEE & ASSOCIATES, INC.
MEANSKI
Consulting Engineers
1670 SOUTH TAYLORVILLE ROAD
DECATUR, ILLINOIS
Illinois License: 184001285

**VILLAGE OF OREANA, ILLINOIS**
SAFE TEA-LU PROJECT
**ADJUSTING WATER MAIN DETAILS**

0 20 40 PLAN & PROFILE HORIZONTAL
0 5 10 PROFILE VERTICAL

SHEET NO. 22 OF 46

| ROUTE NO. | SECTION | CITY | TOTAL SHEETS | SHEET NO. |
|---|---|---|---|---|
| | 05-00001-00-RP | OREANA | 46 | 23 |
| FED. ROAD DIST. NO. | | ILLINOIS | PROJECT HPP-0913 (001) | |

**CONTRACT NUMBER 95537**

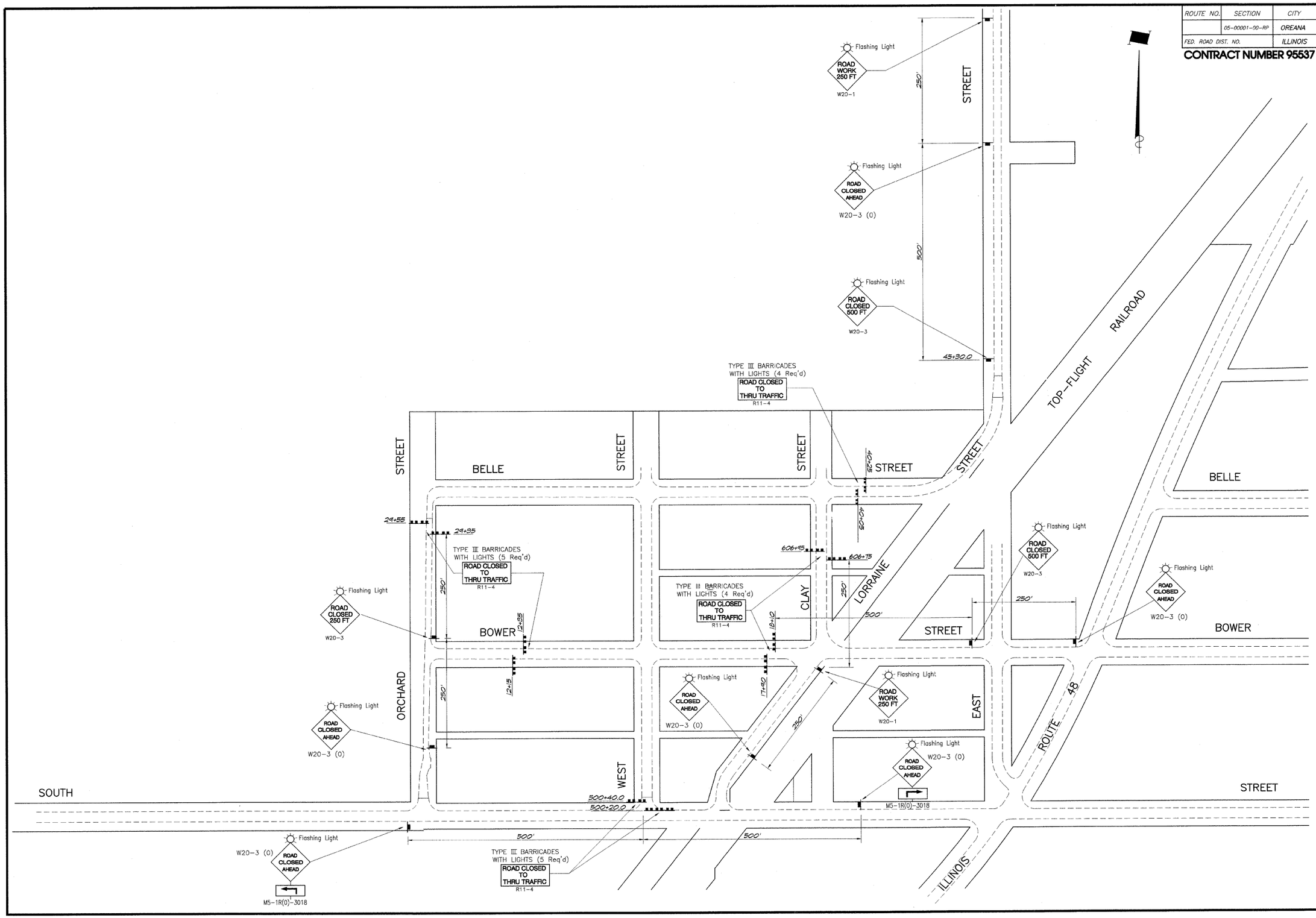


REVISIONS

| NO. | BY | DATE |
|---|---|---|
| 1 | MHP | 1-30-04 |

SCALE Hor. 1" = 100'
DATE Aug. 2006
JOB NO. 06-040A
DESIGNED MHP
DRAWN Les Jenkins
FIELD BOOK XXX

BAINBRIDGE GEE MILANSKI & ASSOCIATES, INC.
Consulting Engineers
1670 SOUTH TAYLORVILLE ROAD
DECATUR ILLINOIS
Illinois License 184-001255

# VILLAGE OF OREANA, ILLINOIS

TEA-21 REAUTHORIZATION

## TRAFFIC CONTROL PLAN

0 100 200
PLAN

SHEET NO. 23 OF 46

| ROUTE NO. | SECTION | CITY | TOTAL SHEETS | SHEET NO. |
|---|---|---|---|---|
| | 05-00001-00-RP | OREANA | 46 | 24 |
| FED. ROAD DIST. NO. | | ILLINOIS | PROJECT HPP-0913 (001) | |

**CONTRACT NUMBER 95537**

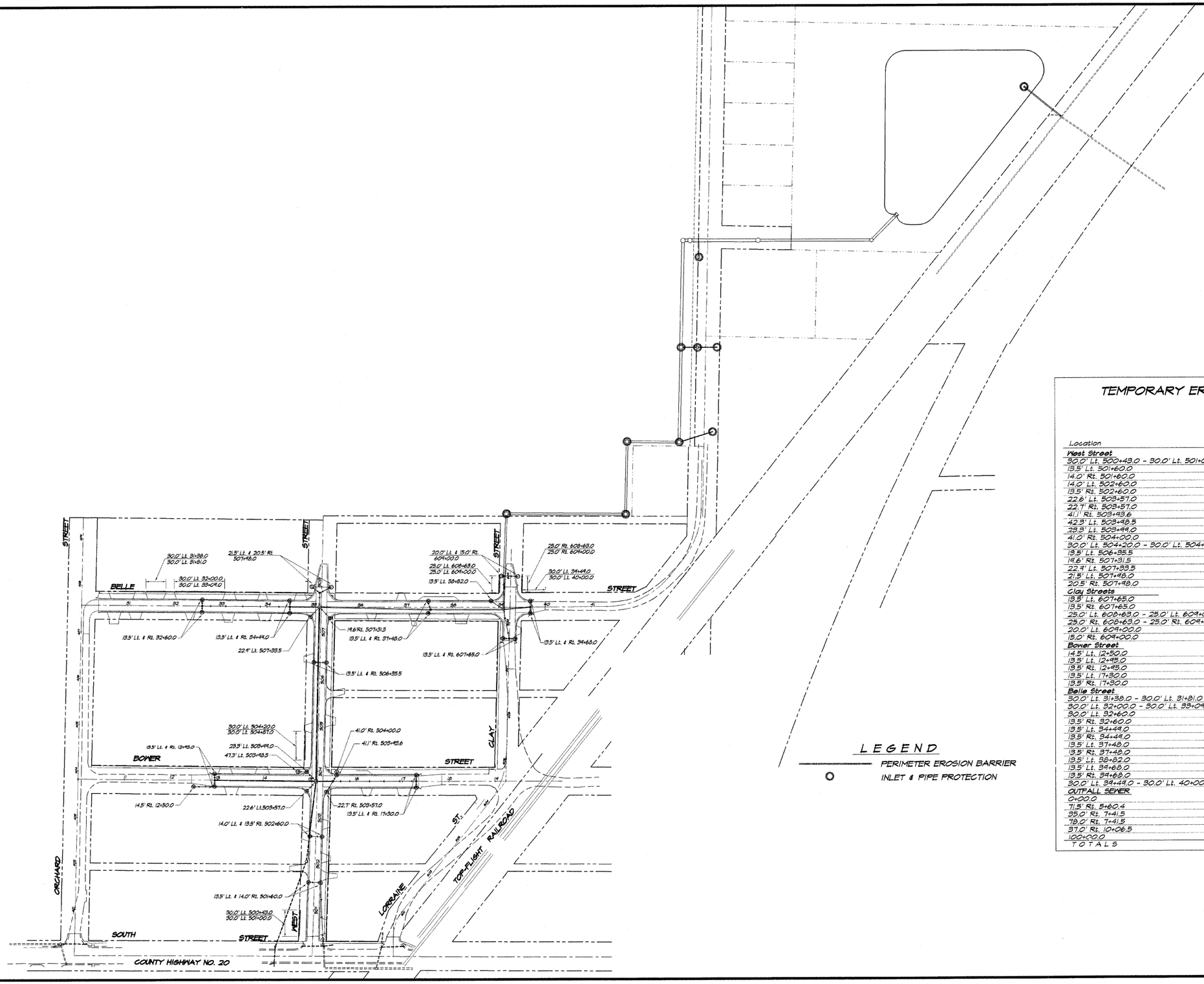


## LEGEND

PERIMETER EROSION BARRIER

INLET & PIPE PROTECTION

## TEMPORARY EROSION CONTROL

| Location | 28000400 Perimeter Erosion Barrier Foot | 28000500 Inlet & Pipe Protection Each |
|---|---|---|
| **West Street** | | |
| 30.0' Lt. 500+43.0 - 30.0' Lt. 501+00.0 | 57 | — |
| 13.5' Lt. 501+60.0 | — | 1 |
| 14.0' Rt. 501+60.0 | — | 1 |
| 14.0' Lt. 502+60.0 | — | 1 |
| 13.5' Rt. 502+60.0 | — | 1 |
| 22.6' Lt. 503+57.0 | — | 1 |
| 22.7' Rt. 503+57.0 | — | 1 |
| 41.1' Rt. 503+43.6 | — | 1 |
| 42.3' Lt. 503+48.5 | — | 1 |
| 28.3' Lt. 503+49.0 | — | 1 |
| 41.0' Rt. 504+00.0 | — | 1 |
| 30.0' Lt. 504+20.0 - 30.0' Lt. 504+87.0 | 67 | — |
| 13.5' Lt. 506+35.5 | — | 1 |
| 14.6' Rt. 507+31.5 | — | 1 |
| 22.4' Lt. 507+33.5 | — | 1 |
| 21.5' Lt. 507+48.0 | — | 1 |
| 20.5' Rt. 507+48.0 | — | 1 |
| **Clay Streets** | | |
| 13.5' Lt. 607+65.0 | — | 1 |
| 13.5' Rt. 607+65.0 | — | 1 |
| 25.0' Lt. 608+63.0 - 25.0' Lt. 609+00.0 | 37 | — |
| 25.0' Rt. 608+63.0 - 25.0' Rt. 609+00.0 | 37 | — |
| 20.0' Lt. 609+00.0 | — | 1 |
| 15.0' Rt. 609+00.0 | — | 1 |
| **Bower Street** | | |
| 14.5' Lt. 12+50.0 | — | 1 |
| 13.5' Lt. 12+45.0 | — | 1 |
| 13.5' Rt. 12+45.0 | — | 1 |
| 13.5' Lt. 17+30.0 | — | 1 |
| 13.5' Rt. 17+30.0 | — | 1 |
| **Belle Street** | | |
| 30.0' Lt. 31+38.0 - 30.0' Lt. 31+81.0 | 43 | — |
| 30.0' Lt. 32+00.0 - 30.0' Lt. 33+04.0 | 109 | — |
| 30.0' Lt. 32+60.0 | — | 1 |
| 13.5' Rt. 32+60.0 | — | 1 |
| 13.5' Lt. 34+49.0 | — | 1 |
| 13.5' Rt. 34+49.0 | — | 1 |
| 13.5' Lt. 37+48.0 | — | 1 |
| 13.5' Rt. 37+48.0 | — | 1 |
| 13.5' Lt. 58+82.0 | — | 1 |
| 13.5' Lt. 34+68.0 | — | 1 |
| 13.5' Rt. 34+68.0 | — | 1 |
| 30.0' Lt. 34+44.0 - 30.0' Lt. 40+00.0 | 51 | |
| **OUTFALL SEWER** | | |
| 0+00.0 | — | 1 |
| 71.5' Rt. 5+60.4 | — | 1 |
| 35.0' Rt. 7+41.5 | — | 1 |
| 78.0' Rt. 7+41.5 | — | 1 |
| 37.0' Rt. 10+06.5 | — | 1 |
| 100+00.0 | — | 1 |
| TOTALS | 401 | 34 |

| REVISIONS | | | |
|---|---|---|---|
| NO. | BY | DATE | |
| 1 | MHP | 1-30-07 | |
| 2 | MHP | 4-4-07 | |

| | | | |
|---|---|---|---|
| DESIGNED MHP | SCALE 1" = 100' | | |
| DRAWN Les Jenkins | DATE July 2006 | | |
| FIELD BOOK XXX | JOB NO. 06-040A | | |

BAINBRIDGE & ASSOCIATES, INC.
Consulting Engineers
1870 SOUTH TAYLORVILLE ROAD
DECATUR, ILLINOIS
Illinois License 184-001265

# VILLAGE OF OREANA, ILLINOIS

SAFE TEA-LU PROJECT

## EROSION CONTROL PLAN

120 60 0 PLAN

SHEET NO. 24 OF 46

| ROUTE NO. | SECTION | CITY | TOTAL SHEETS | SHEET NO. |
|---|---|---|---|---|
| | 05-00000-01-RP | OREANA | 46 | 25 |
| FED. ROAD DIST. NO. | | ILLINOIS | PROJECT HPP-0813 (001) | |

**CONTRACT NUMBER 95537**

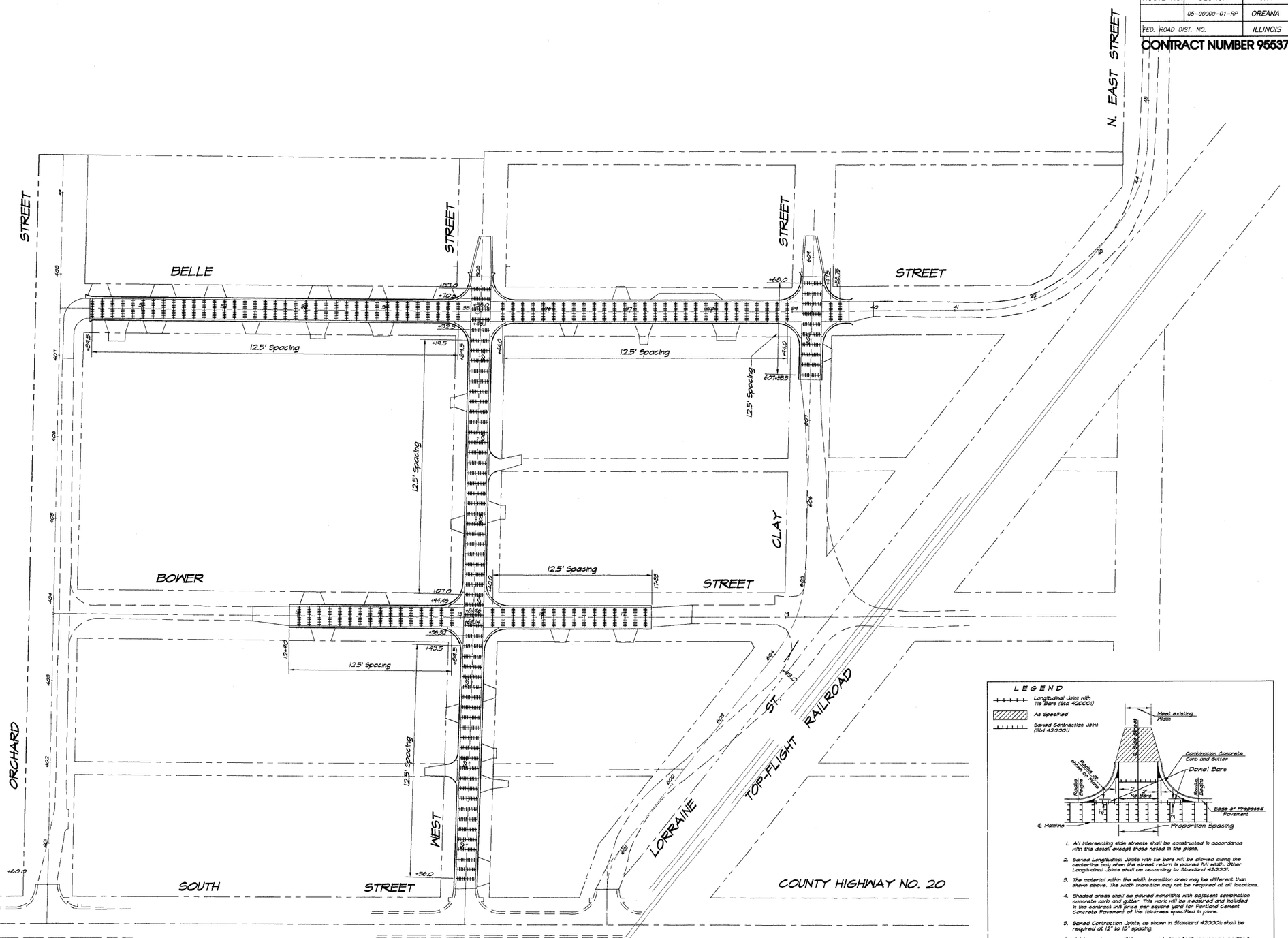


## LEGEND

- Longitudinal Joint with Tie Bars (Std 420001)
- As Specified
- Sawed Contraction Joint (Std 420001)




1. All intersecting side streets shall be constructed in accordance with this detail except those noted in the plans.
2. Sawed Longitudinal Joints with tie bars will be placed along the centerline only when the street return is poured full width. Other Longitudinal Joints shall be according to Standard 420001.
3. The material within the width transition area may be different than shown above. The width transition may not be required at all locations.
4. Shaded areas shall be poured monolithic with adjacent combination concrete curb and gutter. This work will be measured and included in the contract unit price per square yard for Portland Cement Concrete Pavement of the thickness specified in plans.
5. Sawed Contraction Joints, as shown in Standard 420001, shall be required at 12' to 18' spacing.
6. Joint spacing, monolithic pours and other features may be modified to maintain alignment of joints between adjacent panels. See pavement Joint Plan.

**DETAIL OF INTERSECTING SIDE STREET**

| REVISIONS | | | |
|---|---|---|---|
| NO. | BY | DATE | |
| 1 | MHP | 1-30-07 | |

| | |
|---|---|
| DESIGNED MHP | SCALE 1" = 60' |
| DRAWN Les Jenkins | DATE Aug. 2006 |
| FIELD BOOK XXX | JOB NO. C6-040A |

BAINBRIDGE & ASSOCIATES, INC.
Consulting Engineers
GEORGE MIKANSKI
1670 SOUTH TAYLORVILLE ROAD
DECATUR, ILLINOIS
Illinois License 184-001285

# VILLAGE OF OREANA, ILLINOIS
SAFE TEA-LU PROJECT

## JOINTING DETAILS

0 60 120
PLAN

SHEET NO. 25 OF 46

| ROUTE NO. | SECTION | CITY | TOTAL SHEETS | SHEET NO. |
|---|---|---|---|---|
| | 05-00001-00-RP | OREANA | 46 | 26 |
| FED. ROAD DIST. NO. | | ILLINOIS | PROJECT HPP-0913 (001) | |

**CONTRACT NUMBER 95537**

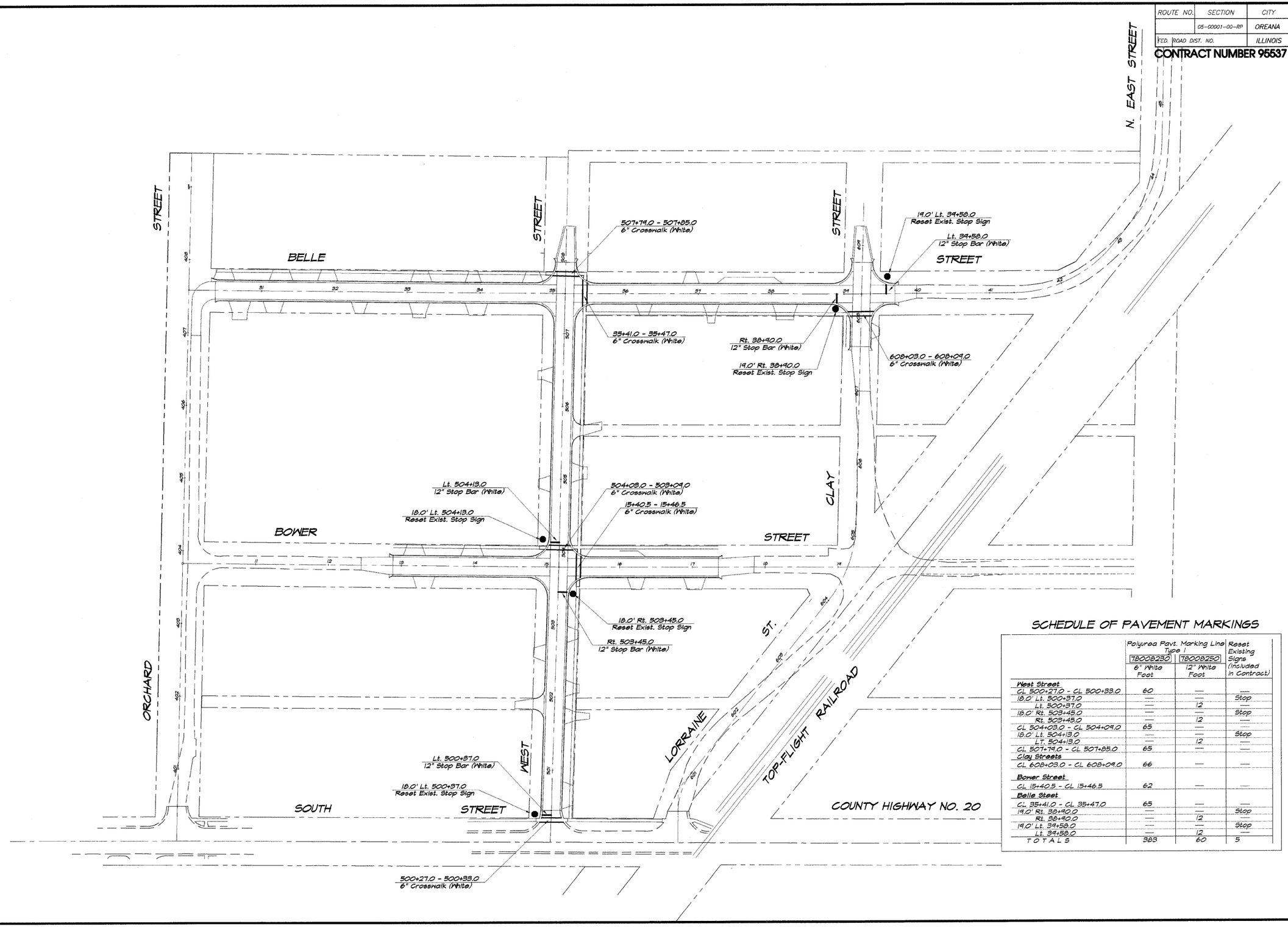


## SCHEDULE OF PAVEMENT MARKINGS

| | Polyurea Pavt. Marking Line Type I | | Reset Existing Signs (Included in Contract) |
|---|---|---|---|
| | TB008230 | TB008250 | |
| | 6" White Foot | 12" White Foot | |
| **West Street** | | | |
| CL 500+27.0 - CL 500+33.0 | 60 | — | — |
| 18.0' Lt. 500+37.0 | — | — | Stop |
| Lt. 500+37.0 | — | 12 | — |
| 18.0' Rt. 503+45.0 | — | — | Stop |
| Rt. 503+45.0 | — | 12 | — |
| CL 504+08.0 - CL 504+09.0 | 65 | — | — |
| 18.0' Lt. 504+13.0 | — | — | Stop |
| LT. 504+13.0 | — | 12 | — |
| CL 507+79.0 - CL 507+85.0 | 65 | — | — |
| **Clay Streets** | | | |
| CL 608+03.0 - CL 608+09.0 | 66 | — | — |
| **Bower Street** | | | |
| CL 15+40.5 - CL 15+46.5 | 62 | — | — |
| **Belle Steet** | | | |
| CL 35+41.0 - CL 35+47.0 | 65 | — | — |
| 19.0' Rt. 38+90.0 | — | — | Stop |
| Rt. 38+90.0 | — | 12 | — |
| 19.0' Lt. 34+58.0 | — | — | Stop |
| Lt. 34+58.0 | — | 12 | — |
| TOTALS | 383 | 60 | 5 |

| REVISIONS | | | |
|---|---|---|---|
| NO. | BY | DATE | |
| 1 | MHP | 1-30-04 | |
| 2 | MHP | 11-08-04 | |

| | | |
|---|---|---|
| DESIGNED MHP | SCALE 1" = 60' | |
| DRAWN Les Jenkins | DATE Aug. 2006 | |
| | FIELD BOOK XXX | JOB NO. 08-040A |

BAINBRIDGE & ASSOCIATES, INC.
Consulting Engineers
1670 SOUTH TAYLORVILLE ROAD
DECATUR, ILLINOIS
Illinois License 184-001285

GEORGE VILEANSKI

# VILLAGE OF OREANA, ILLINOIS
SAFE TEA-LU PROJECT

## PAVEMENT MARKING AND SIGNING DETAILS

0 60 120
PLAN

SHEET NO. 26 OF 46

| ROUTE NO. | SECTION | CITY | TOTAL SHEETS | SHEET NO. |
|---|---|---|---|---|
| | 05-00001-00-RP | OREANA | 46 | 27 |
| FED. ROAD DIST. NO. | ILLINOIS | PROJECT HPP-0913 (001) | | |

**CONTRACT NUMBER 95537**

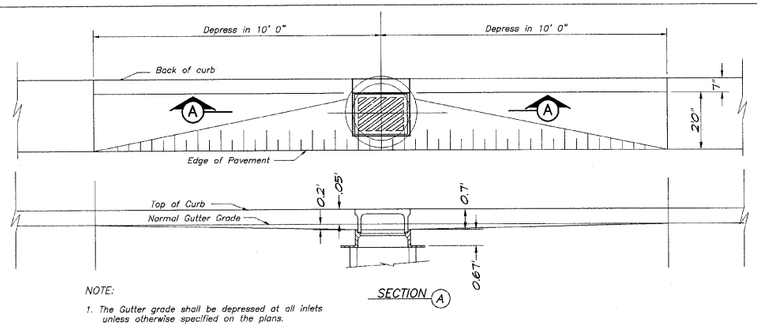


NOTE:

1. The Gutter grade shall be depressed at all inlets unless otherwise specified on the plans.

DEPRESSED GUTTER DETAIL FOR CURB & GUTTER TYPE B-6.24

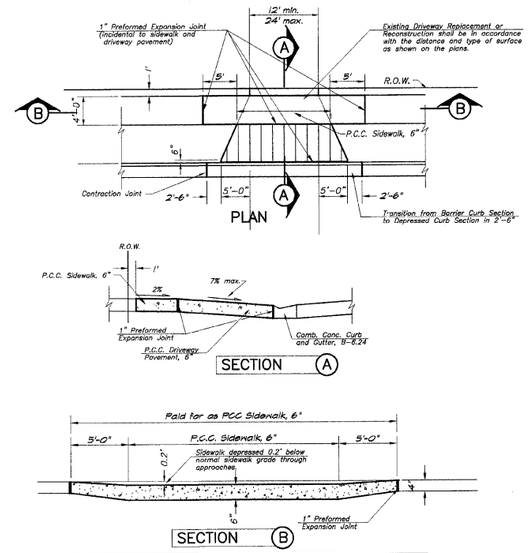


STANDARD DESIGN PE DRIVEWAY APPROACH WITH P.C.C SIDEWALK

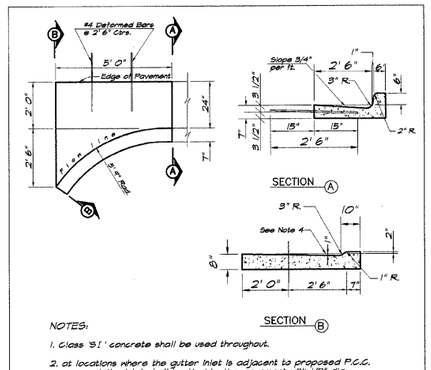


NOTES:

1. Class 'S1' concrete shall be used throughout.
2. At locations where the gutter inlet is adjacent to proposed P.C.C. pavement the inlet shall be tied to the pavement with 1/2" dia. steel bars spaced at 2'-6" ctrs. using either a keyed Longitudinal Construction Joint or the Butt Head Longitudinal Joint with threaded hooked tie bars as shown on I.D.O.T. Std. 420001
3. This work shall be paid for at the contract unit price each for "Gutter Outlet" which price shall include the cost of the Longitudinal Construction Joint and Tie Bars, if required.
4. When inlet is used as an Outlet, drop a total of 6" from the edge of pavement at this point, unless otherwise shown.
5. A Special Inlet requires 0.45 cu. yds. of Concrete (for information only!)

GUTTER OUTLET

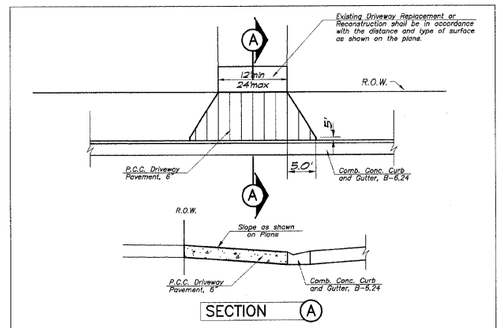


STANDARD DESIGN PE DRIVEWAY APPROACH WITHOUT P.C.C SIDEWALK

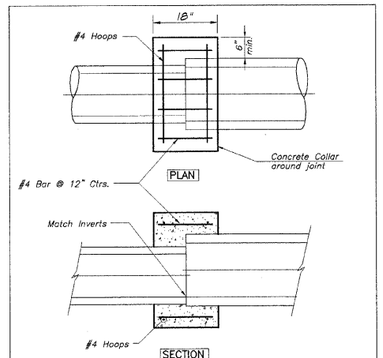


Concrete Collar to be used whenever connecting dissimilar types of pipe and factory adaptors are not available. No extra payment will be made for such collars, but shall be considered incidental to the various drainage items.

Use Class "A" Concrete

STANDARD DESIGN CONCRETE COLLAR

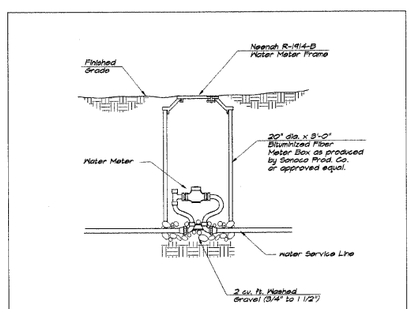


STANDARD DESIGN DOMESTIC METER VAULT

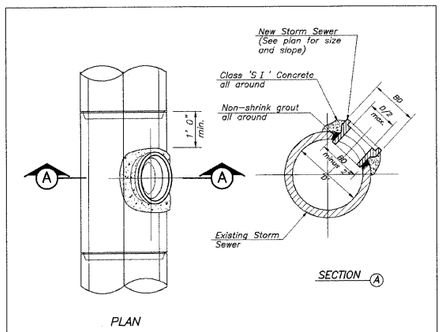


NOTES:

1. The Mainline Sewer shall be broken out by a method which will not damage the remainder of the sewer. Any damage will be repaired by the contractor at his own expense.
2. The contract unit price shall include the cost of breaking out the mainline sewer and furnishing and placing grout and Class "X" concrete.
3. The walls of the New Storm Sewer shall extend into the existing storm sewer a maximum of 1".

STANDARD DESIGN STORM SEWER TAP

| REVISIONS | | | |
|---|---|---|---|
| NO. | BY | DATE | |
| 1 | MHP | 1-30-07 | |
| 2 | MHP | 11-26-07 | |

| | | | |
|---|---|---|---|
| DESIGNED MHP | SCALE N.T.S. | | |
| DRAWN Les Jenkins | DATE July 2006 | | |
| FIELD BOOK XXX | JOB NO. C6-040A | | |

BANBRIDGE & ASSOCIATES, INC.
Consulting Engineers
1670 SOUTH TAYLORVILLE ROAD
DECATUR, ILLINOIS
Illinois License 184-001255

VILLANSKI

# VILLAGE OF OREANA, ILLINOIS

SAFE TEALU PROJECT

## MISCELLANEOUS DETAILS

0 60 120
PLAN

SHEET NO. 27 OF 46

| ROUTE NO. | SECTION | CITY | TOTAL SHEETS | SHEET NO. |
|---|---|---|---|---|
| | 05-00001-00-RP | OREANA | 46 | 28 |
| FED. ROAD DIST. NO. | | ILLINOIS | PROJECT HPP-0913 (001) | |

**CONTRACT NUMBER 95537**

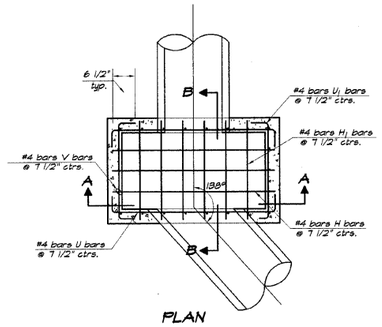


PLAN

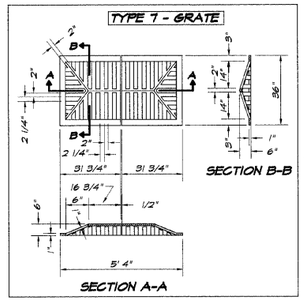


SECTION B-B

SECTION A-A

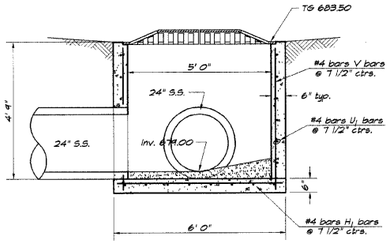


SECTION A-A

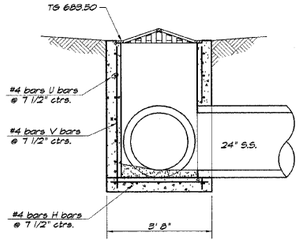


SECTION B-B

| Bar | Qty. | Size | Shape | Length |
|---|---|---|---|---|
| H | 8 | No. 4 | | 5'-4" |
| $H_1$ | 7 | No. 4 | | 9'-5" |
| U | 14 | No. 4 | | 7'-0" |
| $U_1$ | 14 | No. 4 | | 4'-6" |
| V | 22 | No. 4 | | 6'-9" |
| Concrete | | | | 23 cu. yd. |
| Reinforcement Bars | | | | 526 lbs. |

DETAIL OF INLETS, SPECIAL NO.7

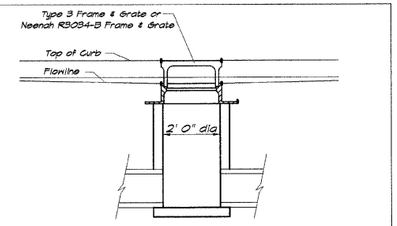


INLETS, SPECIAL NO. 1 = 2' DIA. TYPE A-3 (S) FRAME & GRATE
INLETS, SPECIAL NO. 2 = 2' DIA. TYPE A-3V (S) FRAME & GRATE
INLETS, SPECIAL NO. 4 = 3' DIA. TYPE B-3 (S) FRAME & GRATE
INLETS, SPECIAL NO. 5 = 3' DIA. TYPE B-3V (S) FRAME & GRATE
INLETS, SPECIAL NO. 6 = 3 DIA. TYPE B, NEENAH R-3034-B FRAME & GRATE

DETAIL OF INLETS, SPECIAL NO.'S 1, 2, 4, 5 & 6

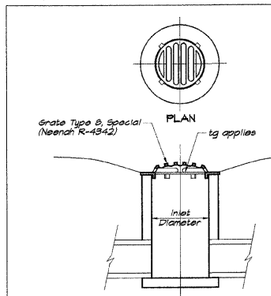


SECTION A-B SPECIAL

INLETS, SPECIAL NO. 3 = 2' DIA. TYPE A-B GRATE (SPECIAL)

DETAIL OF INLETS, SPECIAL NO.3

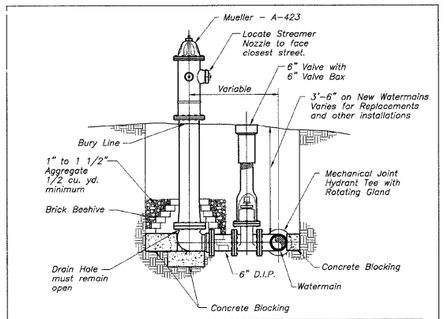


TYPICAL FIRE HYDRANT AND GATE VALVE SETTING

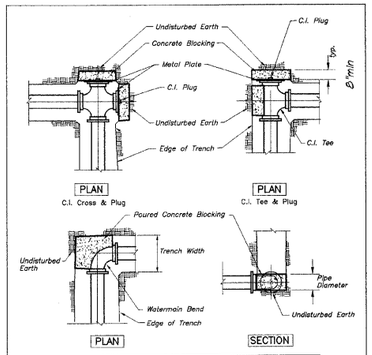


STANDARD DESIGN CONCRETE BLOCKING WATERMAIN - 6" TO 10"

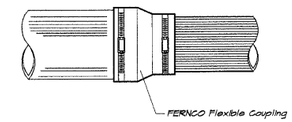


STANDARD DESIGN FOR CONNECTING PIPES OF DIS-SIMILAR MATERIALS AND SIZES

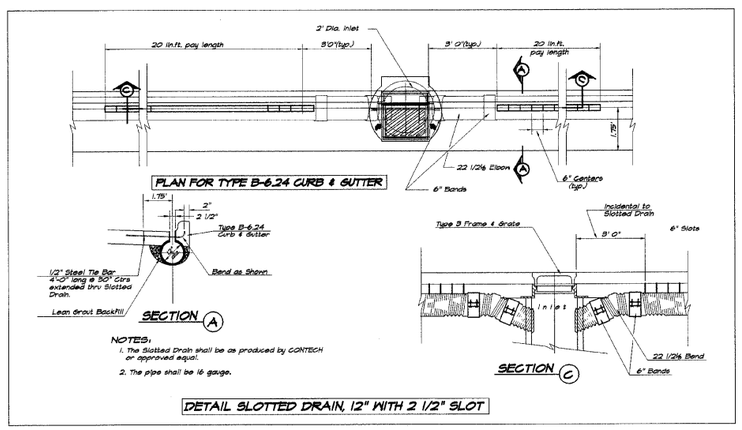


NOTES:
1. The Slotted Drain shall be as produced by CONTECH or approved equal.
2. The pipe shall be 16 gauge.

DETAIL SLOTTED DRAIN, 12" WITH 2 1/2" SLOT

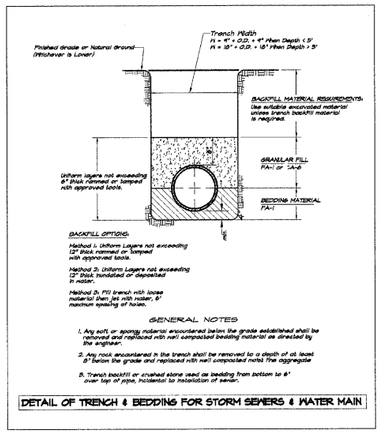


DETAIL OF TRENCH & BEDDING FOR STORM SEWERS & WATER MAIN

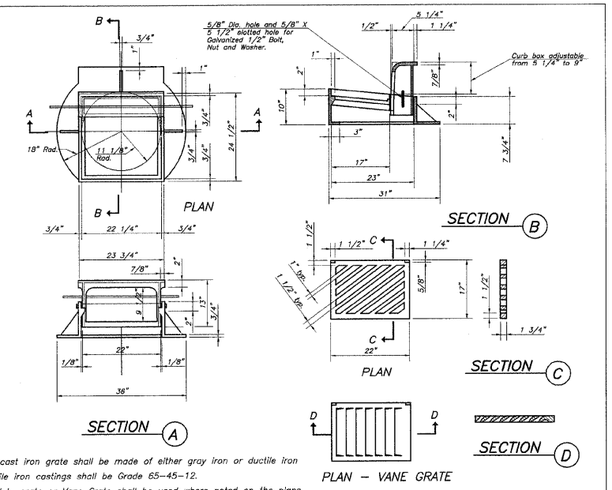


1. The cast iron grate shall be made of either gray iron or ductile iron
2. Ductile iron castings shall be Grade 65-45-12.
Sinusoidal grate or Vane Grate shall be used where noted on the plans.
3. Casting is an Open curb Box NEENAH R-3278A or an approved equal.
4. "V" Denotes Vane Grate.

DETAIL FRAME AND GRATE TYPE 3, SPECIAL

| REVISIONS | | | |
|---|---|---|---|
| NO. | BY | DATE | |
| 1 | MHP | 1-30-04 | |

SCALE N.T.S.
DATE July 2006
JOB NO. C8-040A
DESIGNED MHP
DRAWN Les Jenkins
FIELD BOOK XXX

BAINBRIDGE & ASSOCIATES, INC.
Consulting Engineers
1670 SOUTH TAYLORVILLE ROAD
DECATUR, ILLINOIS
Illinois License 184-001285

VILLAGE OF OREANA, ILLINOIS
SAFE TEA-LU PROJECT
MISCELLANEOUS DETAILS

120 60 0 PLAN

SHEET NO. 28 OF 46

| ROUTE NO. | SECTION | CITY | TOTAL SHEETS | SHEET NO. |
|---|---|---|---|---|
| | 05-00001-00-RP | OREANA | 46 | 29 |
| FED. ROAD DIST. NO. | | ILLINOIS | PROJECT HPP-0913 (001) | |

**CONTRACT NUMBER 95537**

REVISIONS

| NO. | BY | DATE |
|---|---|---|
| 1 | MHP | 1-30-04 |
| 2 | MHP | 4-4-04 |
| 3 | MHP | 11-08-04 |

SCALE 1" = 100'
DESIGNED MHP
DRAWN Les Jenkins
DATE July 2006
FIELD BOOK XXX
JOB NO. 08-C-40A

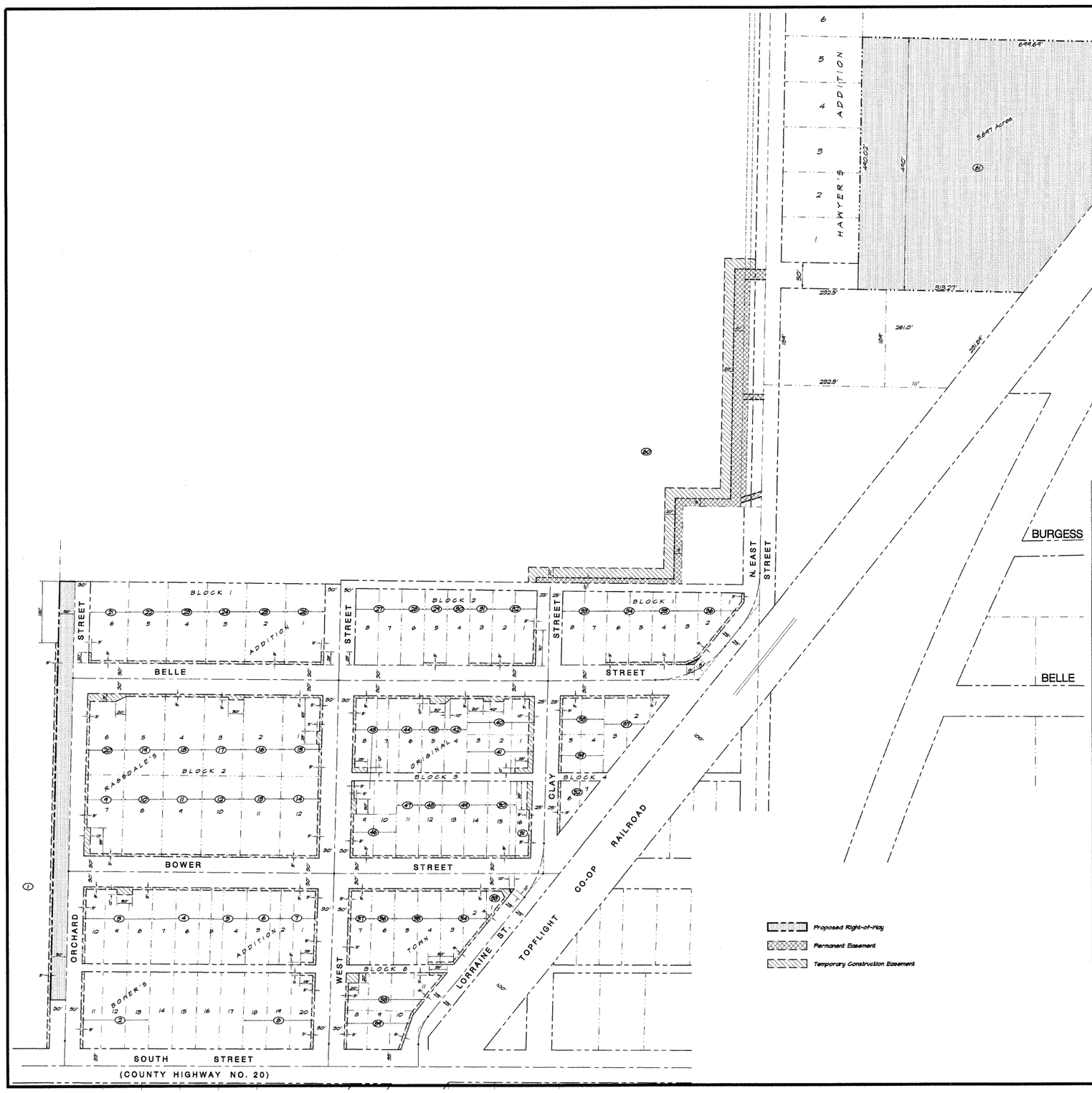


| Parcel No. | Owner | R.O.W. Taking | Permanent Easement | Temporary Easement |
|---|---|---|---|---|
| 1. | Jeffery R. Jackson | 24550 s.f. = 0.563 ac | | 3968 s.f. = 0.091 ac. |
| 2. | Misty Logue | | | 750 s.f. = 0.017 ac. |
| 3. | Helen E. Higgins | | | 1720 s.f. = 0.039 ac. |
| 4. | Carolina A. O'Brien & Bob Burtschi | | | 115 s.f. = 0.003 ac. |
| 5. | James R. Fear | | | 345 s.f. = 0.008 ac. |
| 6. | Harold L. Ballard | | | 330 s.f. = 0.008 ac. |
| 7. | Martha Dalton | | | 1210 s.f. = 0.028 ac. |
| 8. | Eric Edgecombe | | | 875 s.f. = 0.020 ac. |
| 9. | Robert E. & Edna Ryan | | | 651 s.f. = 0.015 ac. |
| 10. | Michael P. Sleeth | | | 301 s.f. = 0.007 ac. |
| 11. | Eileen Francis Sleeth | | | 301 s.f. = 0.007 ac. |
| 12. | Lori Slade | | | 383 s.f. = 0.009 ac. |
| 13. | Barry Karakozhos c/o Kathy Charron | | | 383 s.f. = 0.009 ac. |
| 14. | Walter O. Conway | | | 1148 s.f. = 0.026 ac. |
| 15. | Mark A. Daley | | | 1273 s.f. = 0.029 ac. |
| 16. | Martha Ellen Dalton | | | 383 s.f. = 0.009 ac. |
| 17 | Cheryl Lavinn Karner | | | 538 s.f. = 0.012 ac. |
| 18. | Harold L. Fairweather | | | 383 s.f. = 0.009 ac. |
| 19. | Trent Cross | | | 383 s.f. = 0.009 ac. |
| 20. | James A. & Dorothy L. Tryban | | | 1740 s.f. = 0.040 ac. |
| 21. | Jim Jones & Louise Parsons | | | 430 s.f. = 0.010 ac. |
| 22. | Louise L. Parsons | | | 383 s.f. = 0.009 ac. |
| 23. | F. Charles & Rosemary Kolesar | | | 383 s.f. = 0.009 ac. |
| 24. | Fred D. & Virginia L. Shotter | | | 383 s.f. = 0.009 ac. |
| 25. | James S. Clark | | | 383 s.f. = 0.009 ac. |
| 26. | Michael D. & Crystal Sunderland | | | 483 s.f. = 0.011 ac. |
| 27 | Marsha Park | | | |
| 28. | Robert A. & Audrey Williams | | | |
| 29. | Rickey L. Horrell | | | 200 s.f. = 0.005 ac. |
| 30. | Catherine Keller | | | |
| 31. | Ronald D. & June A. Fogerson | | | 220 s.f. = 0.005 ac. |
| 32. | Wayne M. & Kathy Charron | | | 325 s.f. = 0.007 ac. |
| 33. | Jackie L. Falk | | | |
| 34. | David Jacobson | | | 440 s.f. = 0.010 ac. |
| 35. | Paul A. Parenti | | | 301 s.f. = 0.007 ac. |
| 36. | Maurice E. & Doris I. Kapper | 87.5 s.f. = 0.002 ac | | 1064 s.f. = 0.024 ac. |
| 37. | Joe Creamer | | | 612 s.f. = 0.014 ac. |
| 38. | James E. Casey | | | 740 s.f. = 0.018 ac. |
| 39. | Ward & Hazel Defore | | | 975 s.f. = 0.024 ac. |
| 40. | Jackie A. & Alice L. Woodruff | | | 1550 s.f. = 0.035 ac. |
| 41. | Rachael Alwood | | | 1000 s.f. = 0.023 ac. |
| 42. | David L. Ward | | | 270 s.f. = 0.006 ac. |
| 43. | Herbert D. Porter, Sr. | | | 520 s.f. = 0.012 ac. |
| 44. | Terry & Jenny Collins | | | 380 s.f. = 0.008 ac. |
| 45. | Donald A. & Tracy Stubblefield | | | 1780 s.f. = 0.041 ac. |
| 46. | William O. & Jadeen Ratliff | | | 840 s.f. = 0.019 ac. |
| 47. | Dick & Debra Morstatter | | | 220 s.f. = 0.005 ac. |
| 48. | Chester A. Crane | | | 220 s.f. = 0.005 ac. |
| 49. | Wayne M. & Kathy Charron | | | 440 s.f. = 0.010 ac. |
| 50. | Town of Whitmore | | | 280 s.f. = 0.006 ac. |
| 51. | Logan Properties, LLC | | | 1150 s.f. = 0.026 ac. |
| 52. | Carol Klepzig | | | 519 s.f. = 0.012 ac. |
| 53. | Village of Oreana | 38.2 s.f. = 0.001 ac | | 644 s.f. = 0.016 ac. |
| 54. | Douglas & Valentina Logan | | | 1094 s.f. = 0.025 ac. |
| 55. | Jeff Tessing | | | 440 s.f. = 0.010 ac. |
| 56. | Mindy Griffith | | | 220 s.f. = 0.005 ac. |
| 57. | Tammy L. Stephens | | | 945 s.f. = 0.022 ac. |
| 58. | Arin Keathley | | | 1416 s.f. = 0.032 ac. |
| 59. | John W. & Heckwine Fornear | | | 754 s.f. = 0.017 ac. |
| 60. | John W. & Paula S. Hill | | 17244 s.f. = 0.397 ac | 28141 s.f. = 0.647 ac. |
| 61. | Jane H. McEvoy | * 248175 s.f. = 5.847 ac | | |
| | TOTAL | 272251.7 s.f. = 6.263 ac | 17244 s.f. = 0.397 ac | 67044 s.f. = 1.539 ac. |

* Fee Simple Taking


BAINBRIDGE & ASSOCIATES, INC.
Consulting Engineers
GEORGE VREANSKI
1870 SOUTH TAYLORVILLE ROAD
DECATUR, ILLINOIS
Illinois License 184-001255


# VILLAGE OF OREANA, ILLINOIS
SAFE TE&LU PROJECT

## STRIP MAP

0 60 120 PLAN

SHEET NO. 29 OF 46

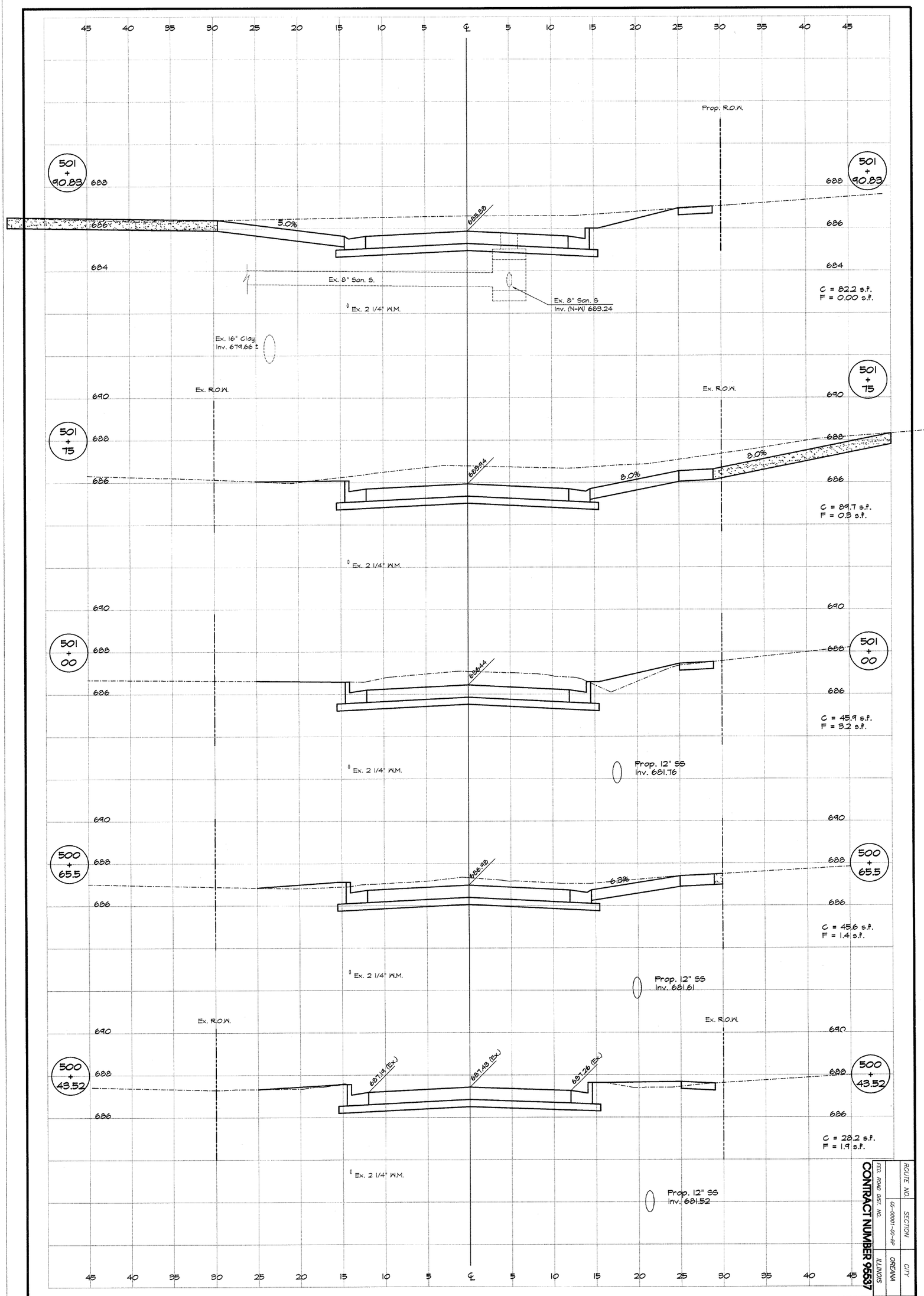


CONTRACT NUMBER 95537

| ROUTE NO. | SECTION | CITY | TOTAL SHEETS | SHEET NO. |
|---|---|---|---|---|
| | 05-00001-00-RP | OREANA | 46 | 30 |
| FED. ROAD DIST. NO. | | ILLINOIS | PROJECT HPP-0913 (001) | |

SHEET NO. 30 OF 46

CROSS SECTION HORIZONTAL 0 5 10

CROSS SECTION VERTICAL 0 2 4

# VILLAGE OF OREANA, ILLINOIS

SAFE TEA - LU PROJECT

## CROSS SECTIONS
## WEST STREET

STATION 500+43.52 TO 501+90.83

BAINBRIDGE GEE MILANSKI & ASSOCIATES, INC.
Consulting Engineers
1670 SOUTH TAYLORVILLE ROAD
DECATUR ILLINOIS
Illinois License 184-001255

| DESIGNED | SCALE |
|---|---|
| MHP | Hor. 1" = 5' Ver. 1" = 2' |
| DRAWN | DATE |
| Les Jenkins | May 2006 |
| FIELD BOOK | JOB NO. |
| XXX | 06-040A |

REVISIONS

| NO. | BY | DATE |
|---|---|---|
| | | |

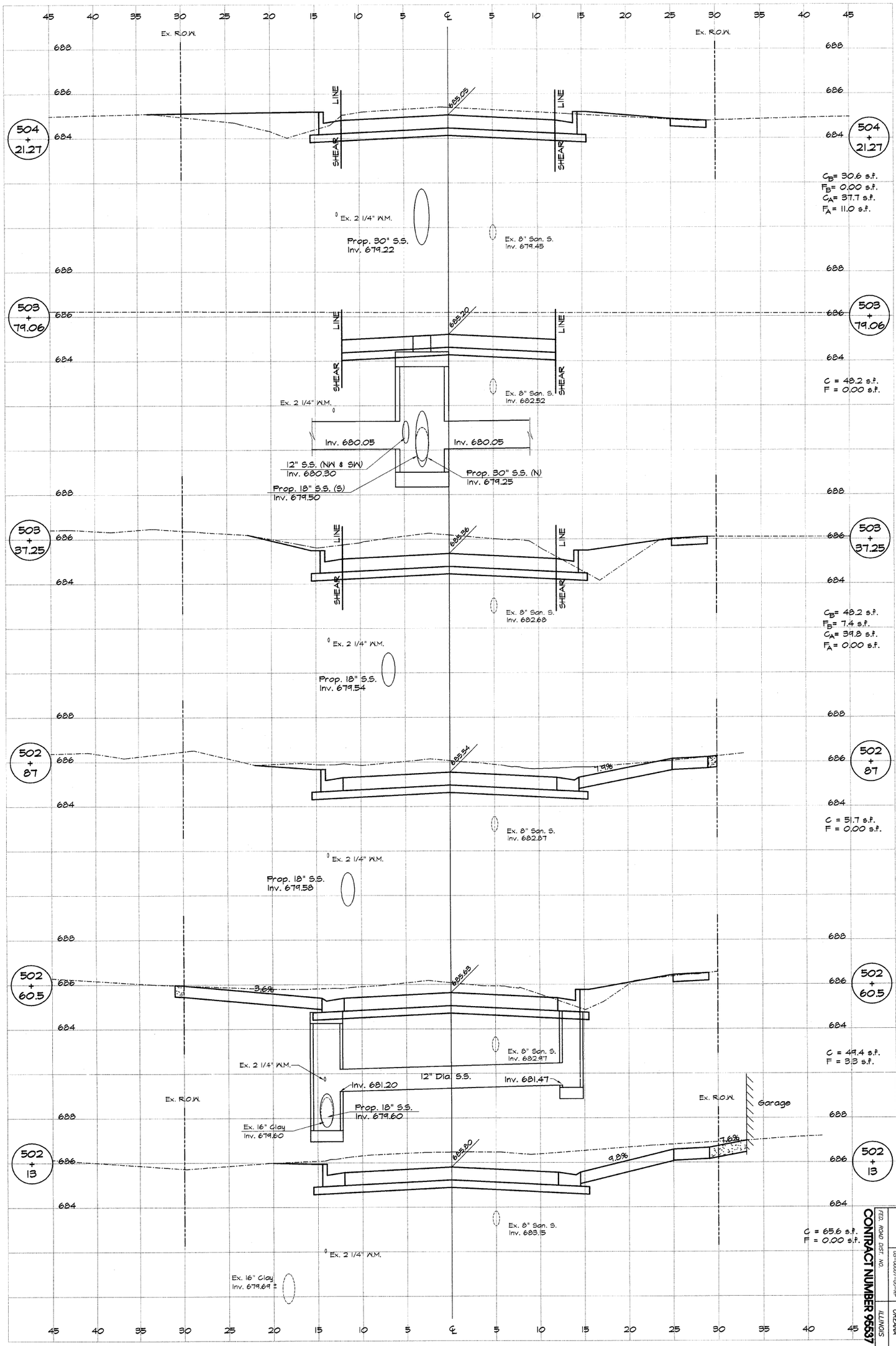


CONTRACT NUMBER 95537

| ROUTE NO. | SECTION | CITY | TOTAL SHEETS | SHEET NO. |
|---|---|---|---|---|
| | 05-00001-00-RP | OREANA | 46 | 31 |

FED. ROAD DIST. NO. ILLINOIS

PROJECT HPP-0913 (001)

SHEET NO. 31 OF 46

CROSS SECTION HORIZONTAL 0 5 10

CROSS SECTION VERTICAL 0 2 4

# VILLAGE OF OREANA, ILLINOIS

SAFE TEA - LU PROJECT

## CROSS SECTIONS WEST STREET

STATION 5002+13.0 TO 504+21.27

BAINBRIDGE GEE MILANSKI & ASSOCIATES, INC.
Consulting Engineers
1670 SOUTH TAYLORVILLE ROAD
DECATUR ILLINOIS
Illinois License 184-001255

| DESIGNED | SCALE |
|---|---|
| MHP | Hor. 1" = 5' Ver. 1" = 2' |
| DRAWN | DATE |
| Les Jenkins | May 2006 |
| FIELD BOOK | JOB NO. |
| XXX | 06-040A |

REVISIONS

| NO. | BY | DATE |
|---|---|---|
| | | |

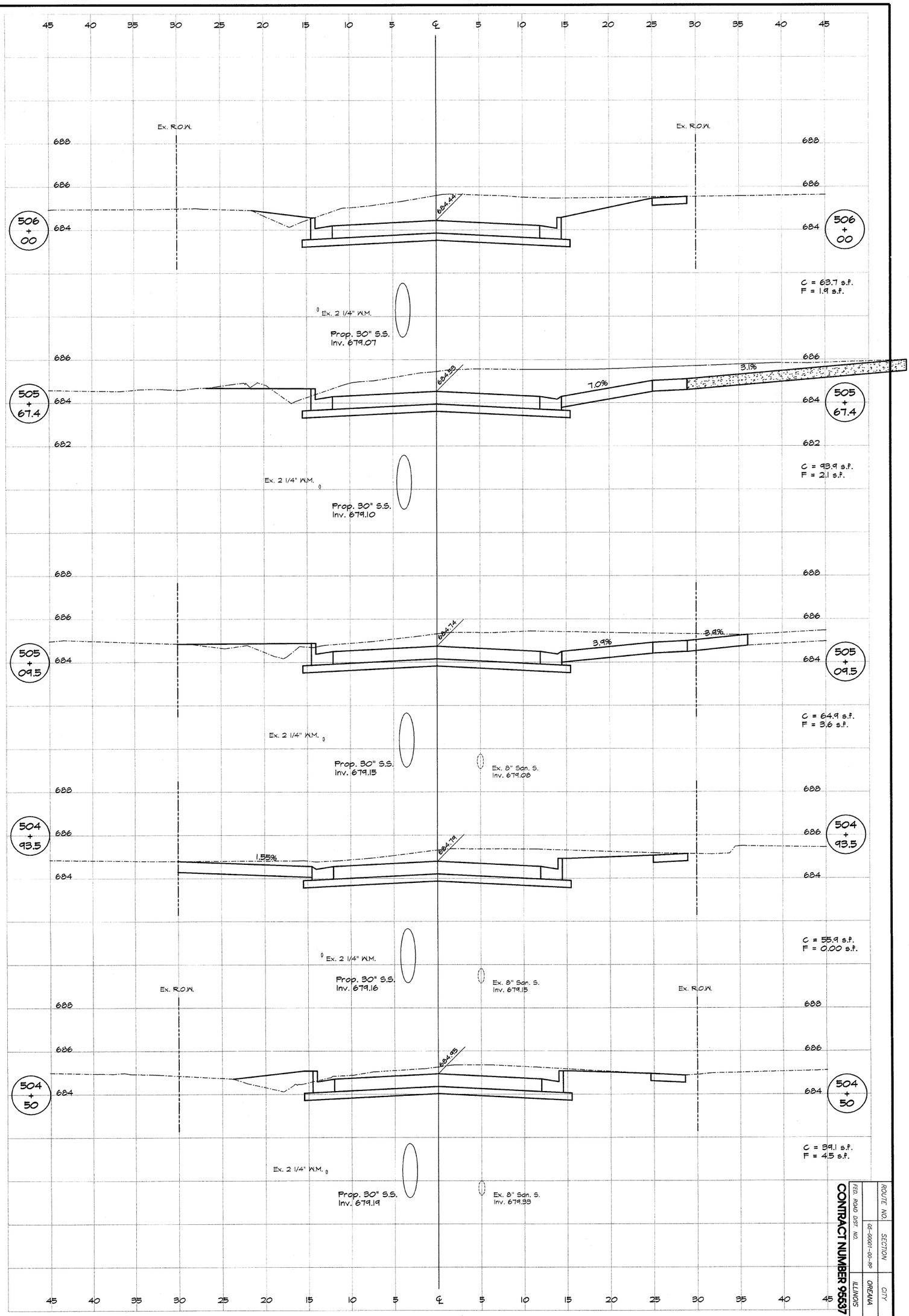


CONTRACT NUMBER 95537

| ROUTE NO. | SECTION | CITY | TOTAL SHEETS | SHEET NO. |
|---|---|---|---|---|
| | 05-00001-00-RP | OREANA | 46 | 32 |

FED. ROAD DIST. NO. ILLINOIS

PROJECT HPP-0913 (001)

SHEET NO. 32 OF 46

CROSS SECTION HORIZONTAL 0 5 10

CROSS SECTION VERTICAL 0 2 4

# VILLAGE OF OREANA, ILLINOIS

SAFE TEA - LU PROJECT

## CROSS SECTIONS
## WEST STREET

STATION 504+50.0 TO 506+00.0

BAINBRIDGE GEE MILANSKI & ASSOCIATES, INC.
Consulting Engineers
1670 SOUTH TAYLORVILLE ROAD
DECATUR ILLINOIS
Illinois License 184-001255

| DESIGNED | SCALE |
|---|---|
| MHP | Hor. 1" = 5' Ver. 1" = 2' |
| DRAWN | DATE |
| Les Jenkins | May 2006 |
| FIELD BOOK | JOB NO. |
| XXX | 06-040A |

REVISIONS

| NO. | BY | DATE |
|---|---|---|
| | | |

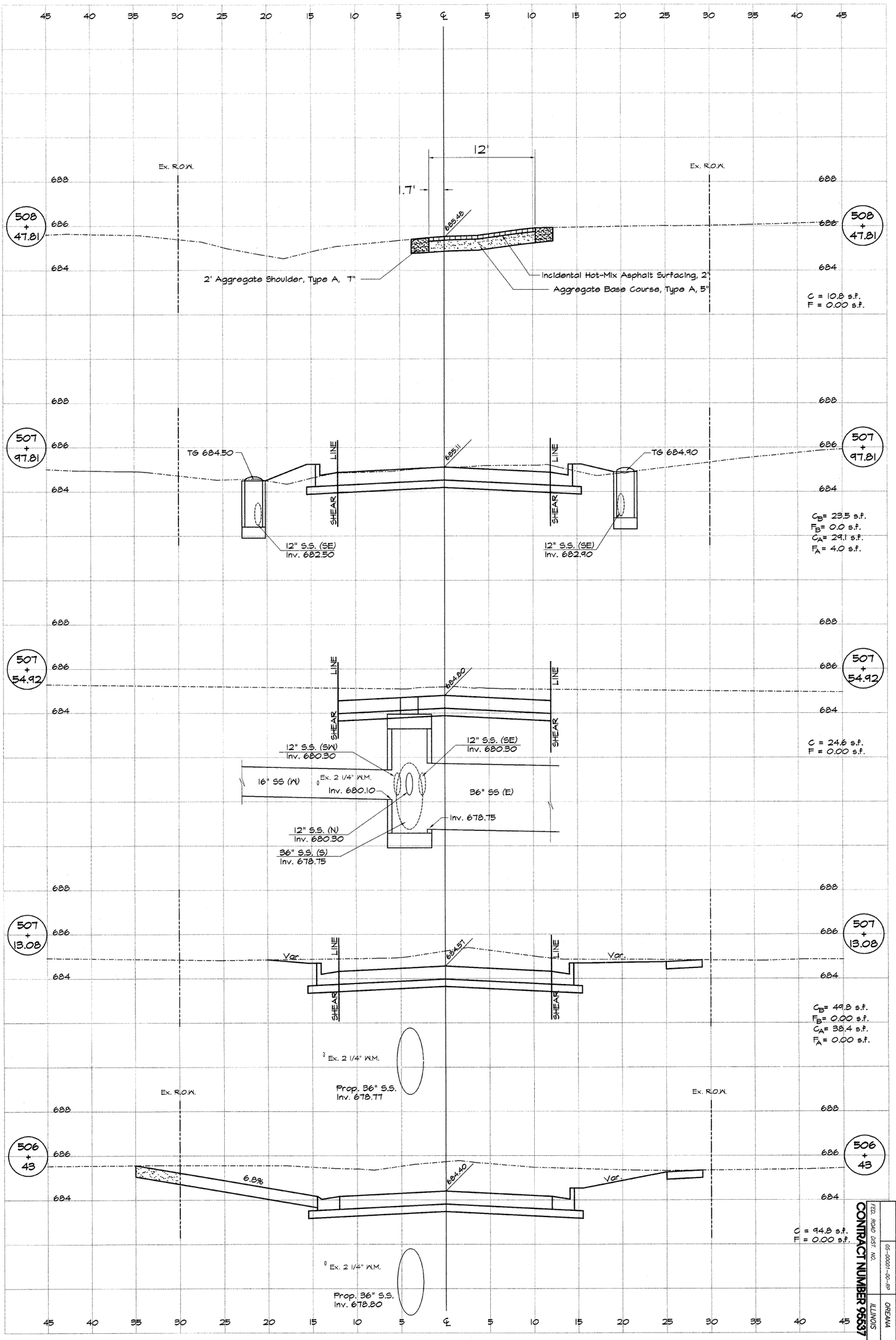


| ROUTE NO. | SECTION | CITY | TOTAL SHEETS | SHEET NO. |
|---|---|---|---|---|
| | 05-00001-00-RP | OREANA | 46 | 33 |

FED. ROAD DIST. NO. ILLINOIS

PROJECT HPP-0013 (001)

CONTRACT NUMBER 95537

SHEET NO. 33 OF 46

CROSS SECTION HORIZONTAL 0 5 10

CROSS SECTION VERTICAL 0 2 4

# VILLAGE OF OREANA, ILLINOIS

SAFE TEA - LU PROJECT

## CROSS SECTIONS WEST STREET

STATION 508+43.0 TO 508+47.81

BAINBRIDGE GEE MILANSKI & ASSOCIATES, INC.
Consulting Engineers
1670 SOUTH TAYLORVILLE ROAD
DECATUR ILLINOIS
Illinois License 184-001255

| DESIGNED | SCALE |
|---|---|
| MHP | Hor. 1" = 5' Ver. 1" = 2' |
| DRAWN | DATE |
| Les Jenkins | May 2006 |
| FIELD BOOK | JOB NO. |
| XXX | 06-040A |

REVISIONS

| NO. | BY | DATE |
|---|---|---|
| | | |

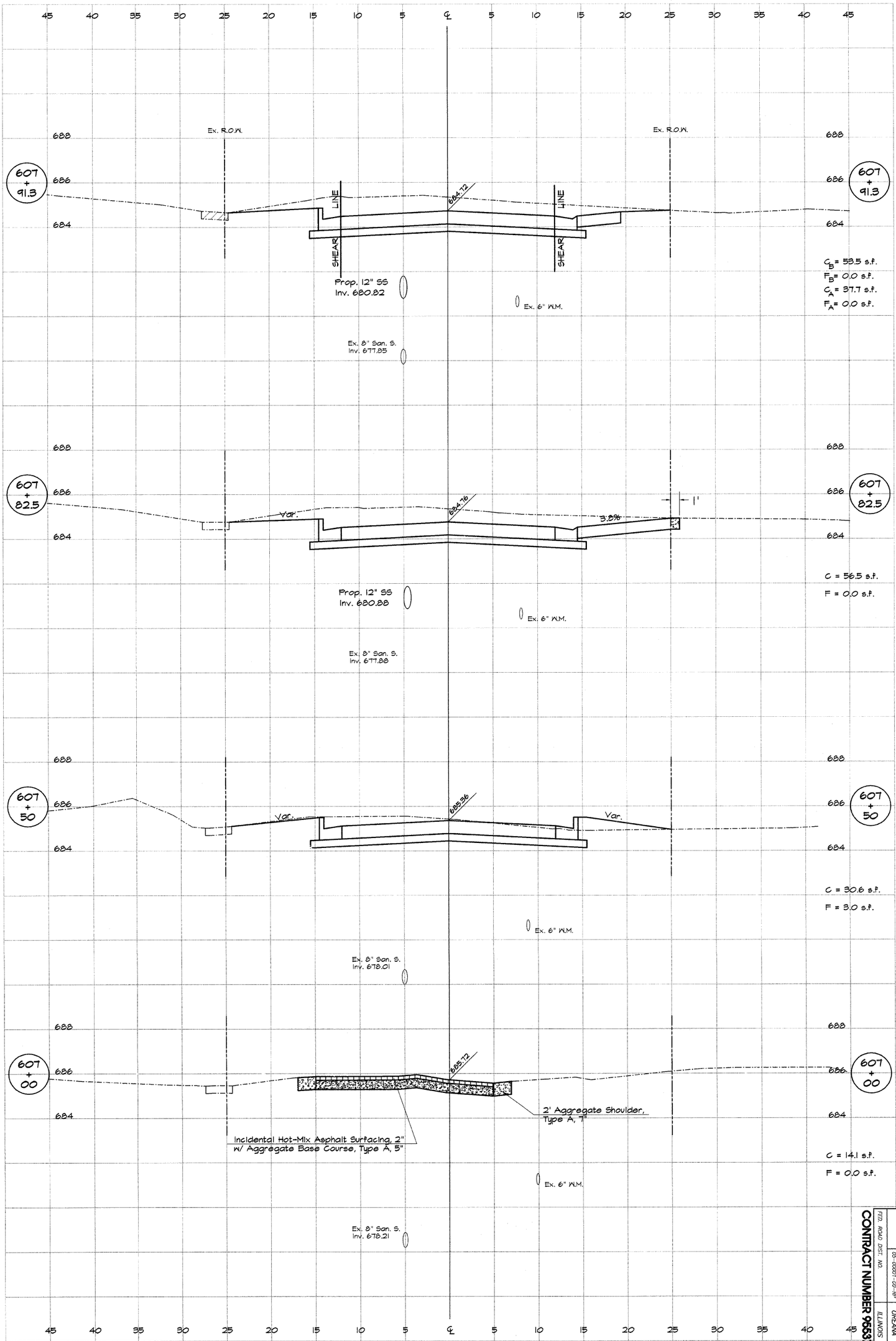


| ROUTE NO. | SECTION | CITY | TOTAL SHEETS | SHEET NO. |
|---|---|---|---|---|
| | 05-00001-00-RP | OREANA | 46 | 34 |

FED. ROAD DIST. NO. ILLINOIS

PROJECT HPP-0913 (001)

CONTRACT NUMBER 95537

SHEET NO. 34 OF 46

0 5 10 CROSS SECTION HORIZONTAL

0 2 4 CROSS SECTION VERTICAL

# VILLAGE OF OREANA, ILLINOIS

SAFE TEA - LU PROJECT

## CROSS SECTIONS LORRAINE-CLAY STREET

STATION 606+62.0 TO 607+91.3

BAINBRIDGE GEE MILANSKI & ASSOCIATES, INC.
Consulting Engineers
1670 SOUTH TAYLORVILLE ROAD
DECATUR ILLINOIS
Illinois License 184-001255

| DESIGNED | SCALE |
|---|---|
| MHP | Hor. 1" = 5' Ver. 1" = 2' |
| DRAWN | DATE |
| Les Jenkins | May 2006 |
| FIELD BOOK | JOB NO. |
| XXX | 06-040A |

REVISIONS

| NO. | BY | DATE |
|---|---|---|
| | | |

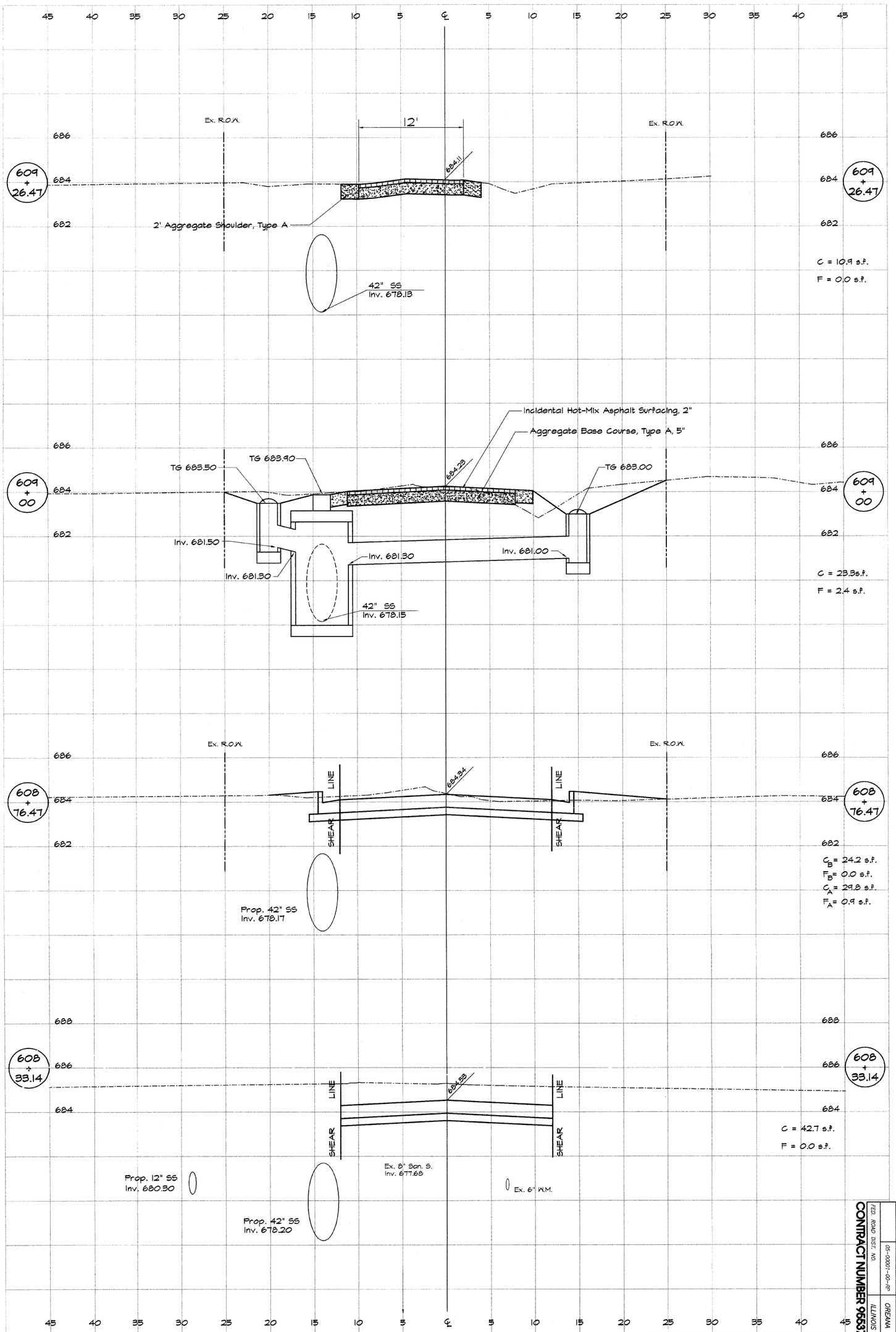


| ROUTE NO. | SECTION | CITY | TOTAL SHEETS | SHEET NO. |
|---|---|---|---|---|
| | 05-00001-00-RP | OREANA | 46 | 35 |
| FED. ROAD DIST. NO. | | ILLINOIS | PROJECT HPP-0913 (001) | |

CONTRACT NUMBER 95537

SHEET NO. 35 OF 46

CROSS SECTION HORIZONTAL 0 5 10

CROSS SECTION VERTICAL 0 2 4

# VILLAGE OF OREANA, ILLINOIS

SAFE TEA - LU PROJECT

## CROSS SECTIONS
## LORRAINE-CLAY STREET

STATION 608+33.14 TO 609+26.47

BAINBRIDGE GEE MILANSKI & ASSOCIATES, INC.
Consulting Engineers
1670 SOUTH TAYLORVILLE ROAD
DECATUR ILLINOIS
Illinois License 184-001255

| DESIGNED | SCALE |
|---|---|
| MHP | Hor. 1" = 5' Ver. 1" = 2' |
| DRAWN | DATE |
| Les Jenkins | May 2006 |
| FIELD BOOK | JOB NO. |
| XXX | 06-040A |

REVISIONS

| NO. | BY | DATE |
|---|---|---|
| | | |

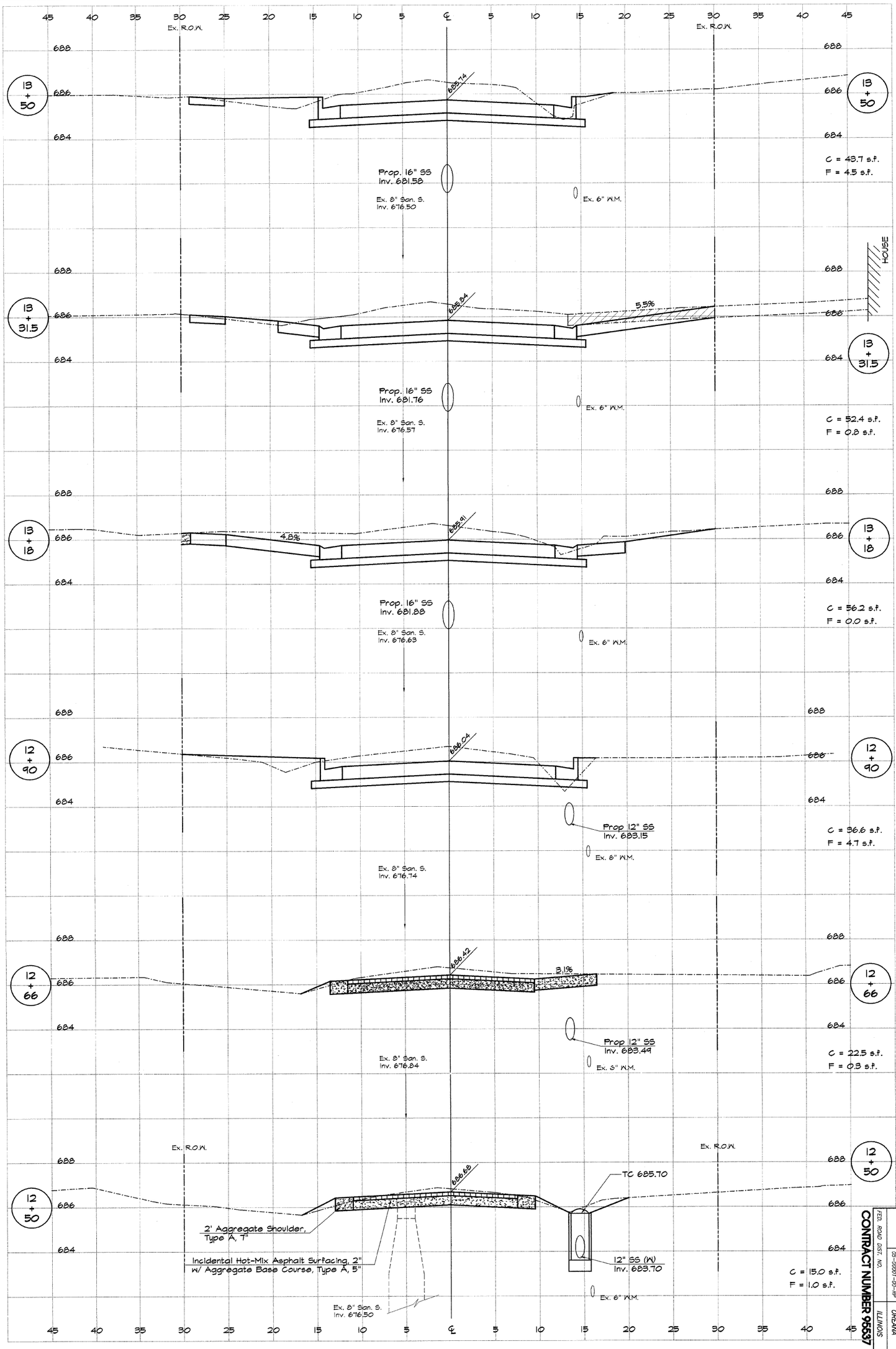


| ROUTE NO. | SECTION | CITY | TOTAL SHEETS | SHEET NO. |
|---|---|---|---|---|
| | 05-00001-00-RP | OREANA | 46 | 36 |

FED. ROAD DIST. NO. ILLINOIS

PROJECT HPP-0913 (001)

CONTRACT NUMBER 95537

SHEET NO. 36 OF 46

CROSS SECTION HORIZONTAL 0 5 10

CROSS SECTION VERTICAL 0 2 4

# VILLAGE OF OREANA, ILLINOIS

SAFE TEA - LU PROJECT

## CROSS SECTIONS
## BOWER STREET

STATION 12+50.0 TO 13+50.0

BAINBRIDGE GEE MILANSKI & ASSOCIATES, INC.
Consulting Engineers
1670 SOUTH TAYLORVILLE ROAD
DECATUR ILLINOIS
Illinois License 184-001255

| DESIGNED | SCALE |
|---|---|
| MHP | Hor. 1" = 5' Ver. 1" = 2' |
| DRAWN | DATE |
| Les Jenkins | May 2006 |
| FIELD BOOK | JOB NO. |
| xxx | 06-040A |

REVISIONS

| NO. | BY | DATE |
|---|---|---|
| 1 | MHP | 1-30-09 |

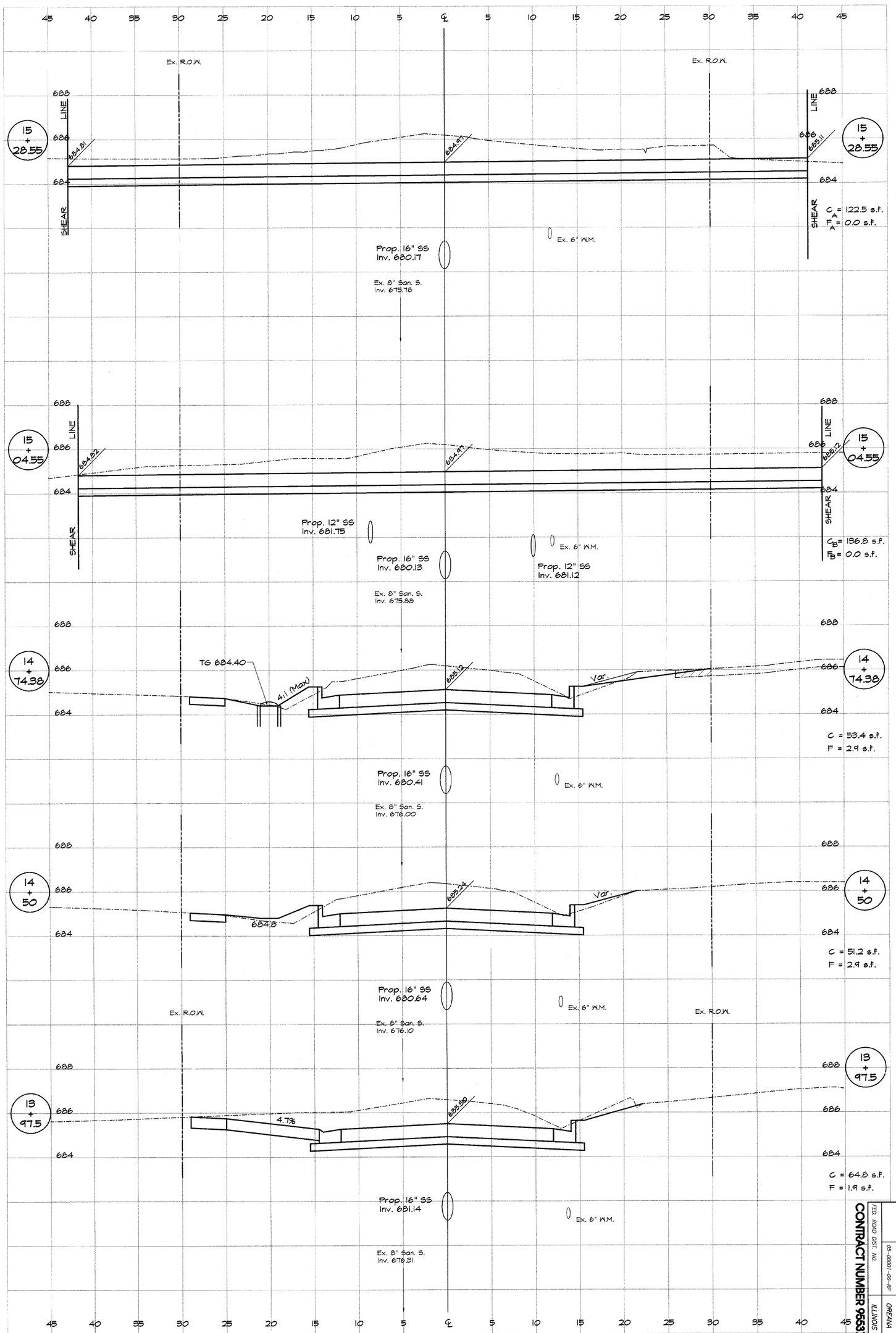


SHEET 37 OF 46

CROSS SECTION HORIZONTAL 0 5 10

CROSS SECTION VERTICAL 0 2 4

# VILLAGE OF OREANA, ILLINOIS

SAFE TEA-LU PROJECT

## CROSS SECTIONS
## BOWER STREET
STATION 13+97.5 TO 16+28.55

BAINBRIDGE GEE MLANSKI & ASSOCIATES, INC.
Consulting Engineers
1670 SOUTH TAYLORVILLE ROAD
DECATUR ILLINOIS
Illinois License 184-001255

| DESIGNED | SCALE |
|---|---|
| MHP | Hor. 1" = 5' Ver. 1" = 2' |
| DRAWN | DATE |
| Les Jenkins | May 2006 |
| FIELD BOOK | JOB NO. |
| XXX | 06-040A |

REVISIONS

| NO. | BY | DATE |
|---|---|---|
| | | |

| ROUTE NO. | SECTION | CITY | TOTAL SHEETS | SHEET NO. |
|---|---|---|---|---|
| FED. ROAD DIST. NO. | 05-00001-00-RP | OREANA ILLINOIS | 46 | 37 |

CONTRACT NUMBER 95537

PROJECT HPP-5B(1)(801)

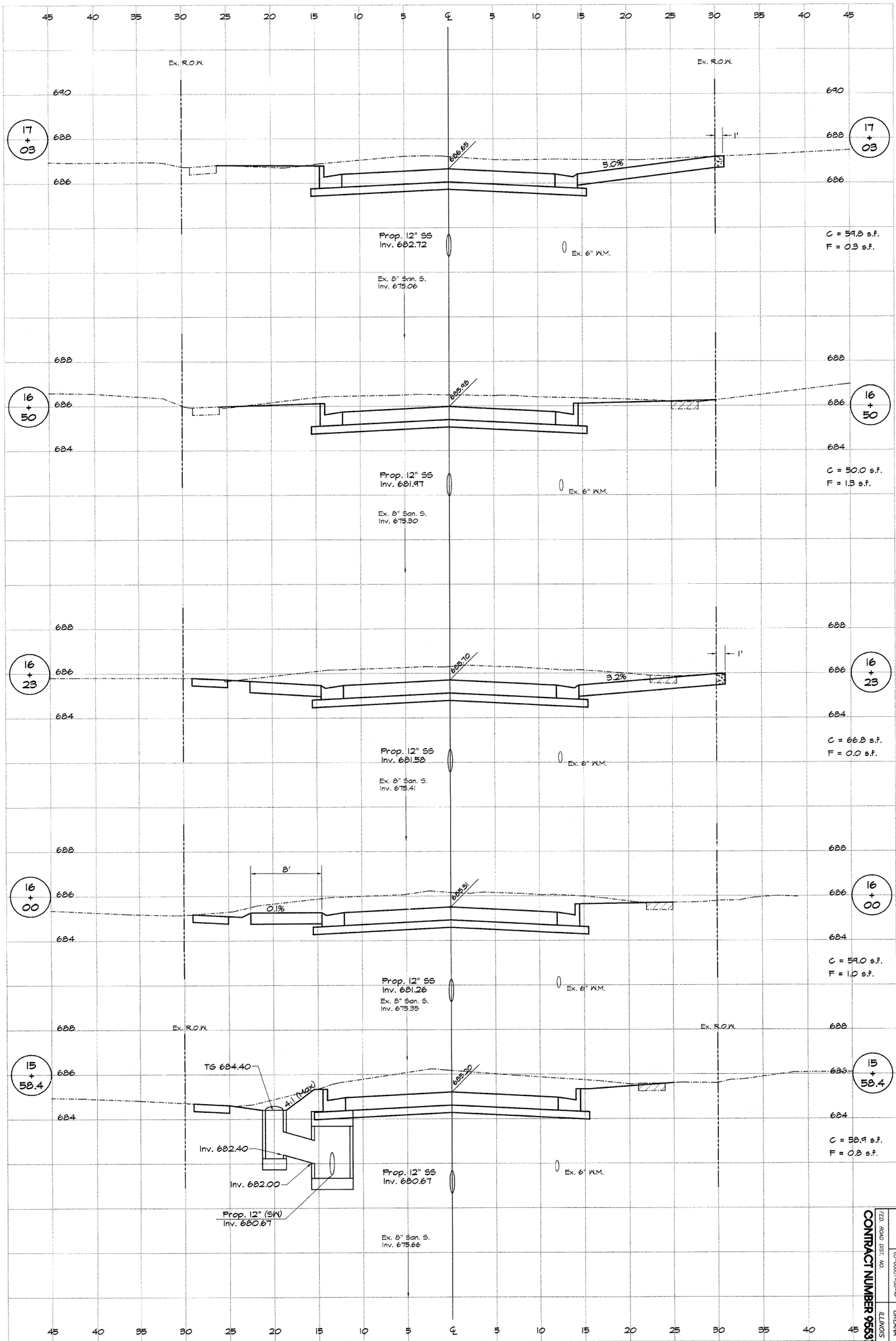


| ROUTE NO. | SECTION | CITY | TOTAL SHEETS | SHEET NO. |
|---|---|---|---|---|
| FED. ROAD DIST. NO. | 05-00001-00-RP | OREANA | 46 | 38 |
| ILLINOIS | | | PROJECT HPP-5913 (001) | |

**CONTRACT NUMBER 95537**

SHEET 38 OF 46 SHEETS

CROSS SECTION HORIZONTAL 0 5 10

CROSS SECTION VERTICAL 0 2 4

# VILLAGE OF OREANA, ILLINOIS

SAFE TEA - LU PROJECT

## CROSS SECTIONS
## BOWER STREET
STATION 15+68.4 TO 17+08.0

BAINBRIDGE GIL MILANSKI & ASSOCIATES, INC.
Consulting Engineers
1670 SOUTH TAYLORVILLE ROAD
DECATUR ILLINOIS
Illinois License 184-001256

| DESIGNED | SCALE |
|---|---|
| MHP | Hor. 1" = 5' Ver. 1" = 2' |
| DRAWN | DATE |
| Les Jenkins | May 2006 |
| FIELD BOOK | JOB NO. |
| XXX | 06-040A |

REVISIONS

| NO. | BY | DATE |
|---|---|---|
| | | |

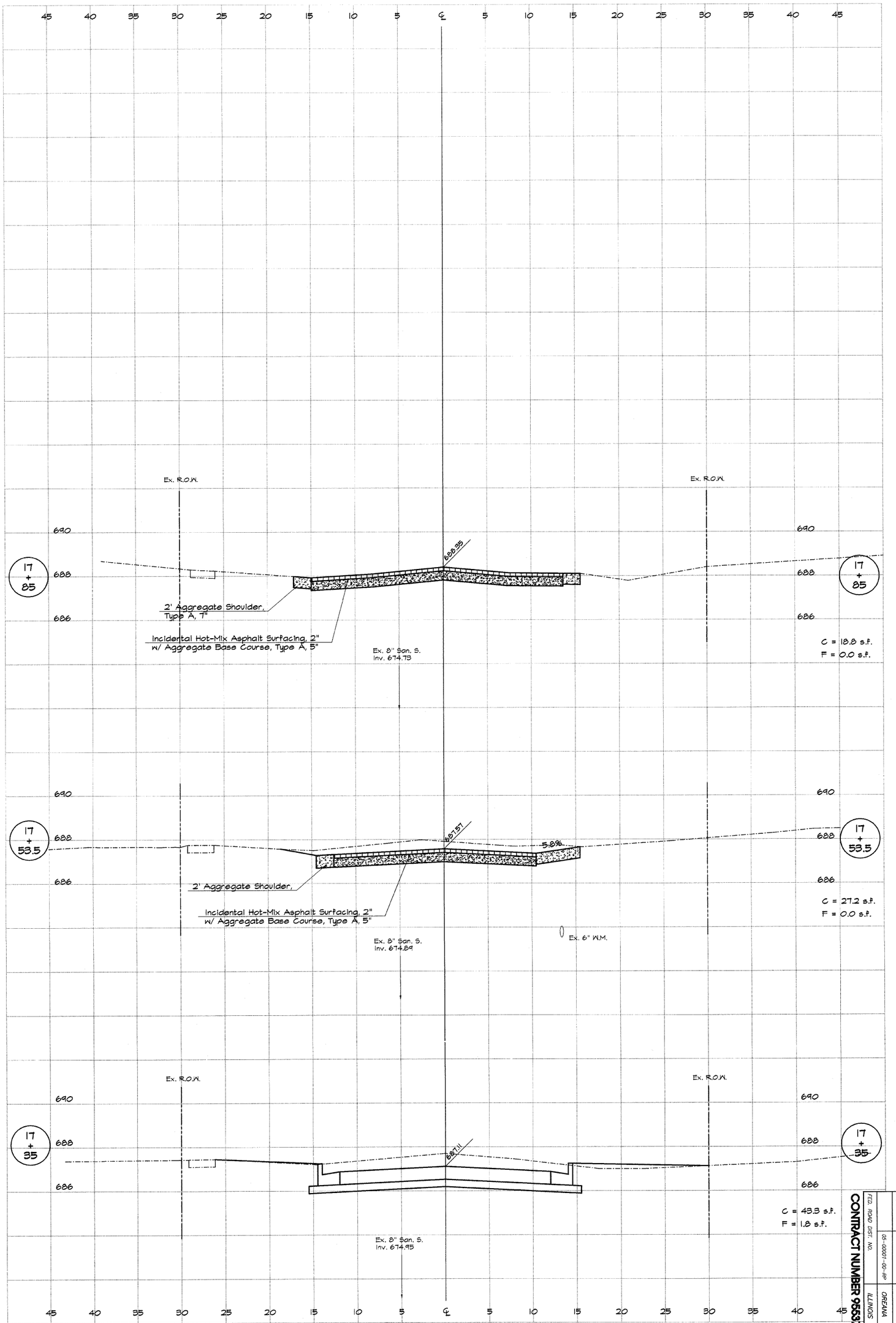


CONTRACT NUMBER 95537

| ROUTE NO. | SECTION | CITY | TOTAL SHEETS | SHEET NO. |
|---|---|---|---|---|
| | 05-00001-00-RP | OREANA | 46 | 39 |

FED. ROAD DIST. NO. ILLINOIS

PROJECT HPP-0813 (001)

SHEET NO. 39 OF 46

CROSS SECTION HORIZONTAL 0 5 10

CROSS SECTION VERTICAL 0 2 4

# VILLAGE OF OREANA, ILLINOIS

SAFE TEA - LU PROJECT

## CROSS SECTIONS BOWER STREET

STATION 17+53.5 TO 18+81.22

BAINBRIDGE GEE MILANSKI & ASSOCIATES, INC.
Consulting Engineers
1670 SOUTH TAYLORVILLE ROAD
DECATUR ILLINOIS
Illinois License 184-001255

| DESIGNED | SCALE |
|---|---|
| MHP | Hor. 1" = 5' Ver. 1" = 2' |
| DRAWN | DATE |
| Les Jenkins | May 2006 |
| FIELD BOOK | JOB NO. |
| XXX | 06-040A |

REVISIONS

| NO. | BY | DATE |
|---|---|---|
| 1 | MHP | 1-30-09 |

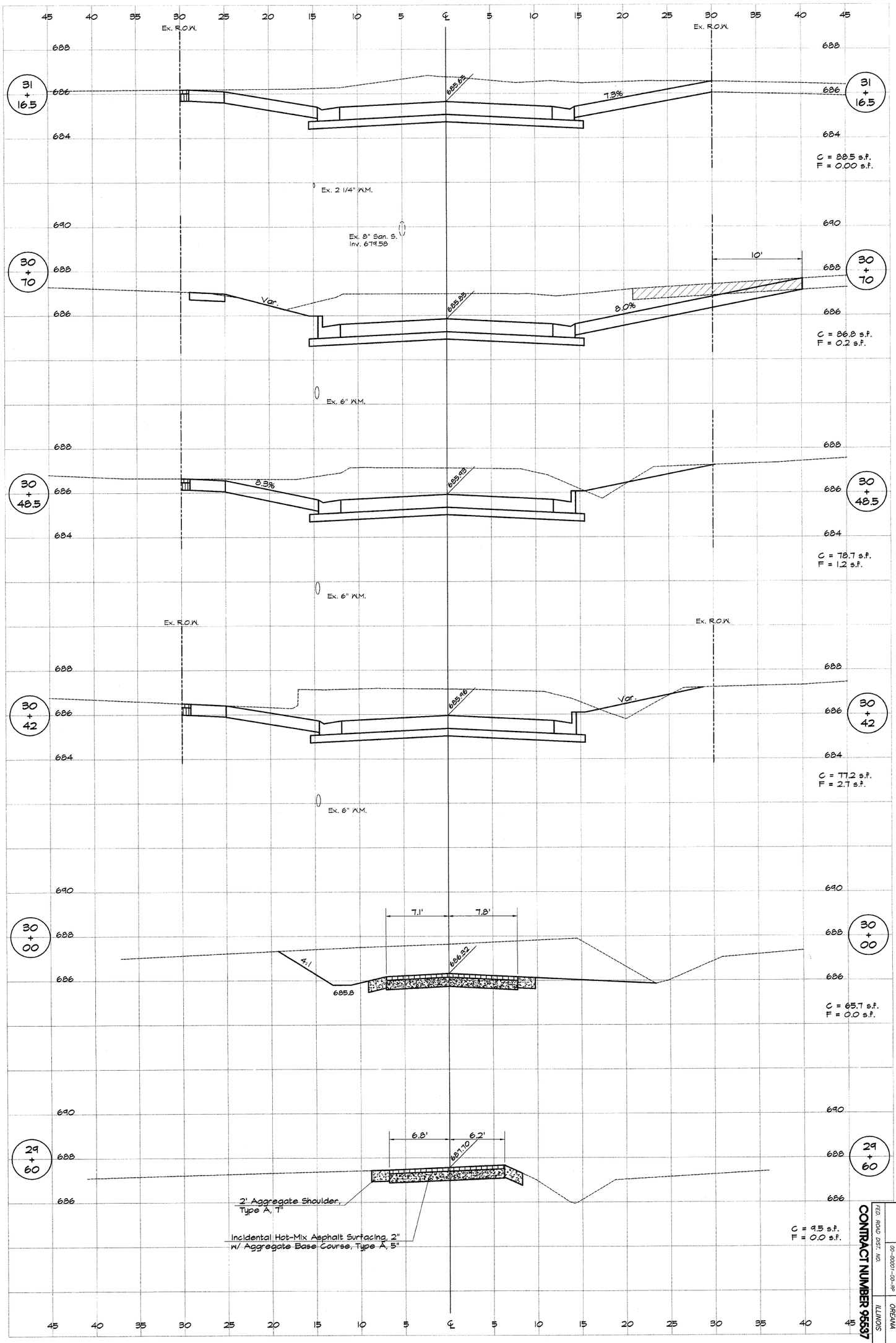


CONTRACT NUMBER 95537

| ROUTE NO. | SECTION | CITY | TOTAL SHEETS |
|---|---|---|---|
| FED. ROAD DIST. NO. | 00-00001-00-RP | ILLINOIS | OREANA | 46 |
| PROJECT | HSP-0812 (001) | SHEET NO. | 40 |

SHEET NO. 40 OF 46

CROSS SECTION HORIZONTAL 0 5 10

CROSS SECTION VERTICAL 0 2 4

# VILLAGE OF OREANA, ILLINOIS

SAFE TEA - LU PROJECT

## CROSS SECTIONS
## BELLE STREET
STATION 30+12.0 TO 31+18.5

BAINBRIDGE GEE MLANSKI & ASSOCIATES, INC.
Consulting Engineers
1670 SOUTH TAYLORVILLE ROAD
DECATUR ILLINOIS
Illinois License 184-001255

| DESIGNED | SCALE | REVISIONS | | |
|---|---|---|---|---|
| MHP | Hor. 1" = 5' Var. 1" = 2' | NO. | BY | DATE |
| DRAWN | DATE | | | |
| Les Jenkins | May 2006 | | | |
| FIELD BOOK | JOB NO. | | | |
| XXX | 06-040A | | | |

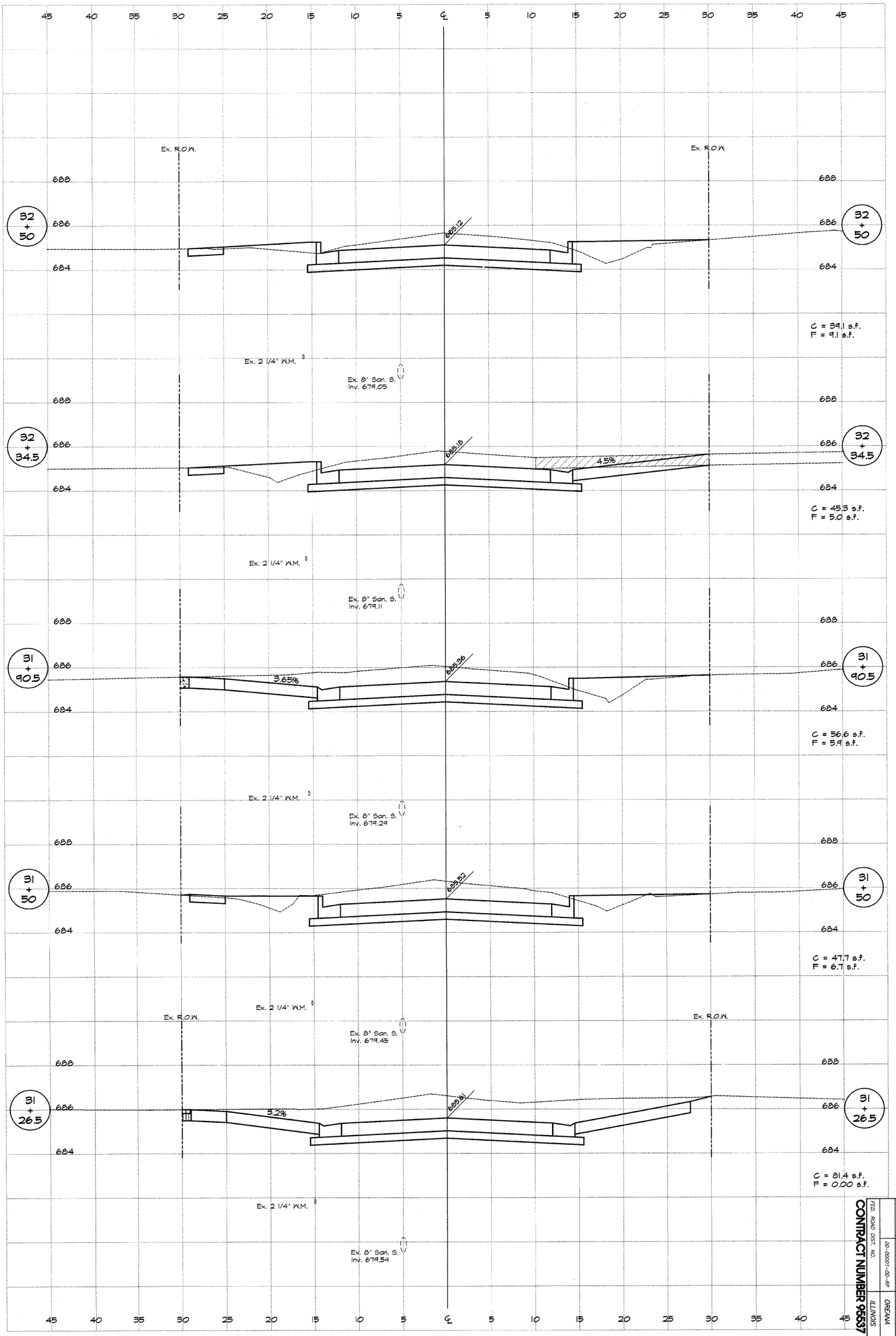


SHEET NO. 41 OF 46

CROSS SECTION HORIZONTAL 0 5 10

CROSS SECTION VERTICAL 0 2 4

# VILLAGE OF OREANA, ILLINOIS

SAFE TEA-LU PROJECT

## CROSS SECTIONS
## BELLE STREET
STATION 31+26.5 TO 32+50.0

BAINBRIDGE GEE MILANSKI & ASSOCIATES, INC.
Consulting Engineers
1670 SOUTH TAYLORVILLE ROAD
DECATUR ILLINOIS
Illinois License 184-001255

| DESIGNED | SCALE |
|---|---|
| MHP | Hor. 1" = 5' Vert. 1" = 2' |
| DRAWN | DATE |
| Lee Jenkins | May 2006 |
| FIELD BOOK | JOB NO. |
| XXX | 06-040A |

REVISIONS

| NO. | BY | DATE |
|---|---|---|
| | | |

CONTRACT NUMBER 95537

| FED. ROAD DIST. NO. | ILLINOIS | PROJECT HPP-0811(001) |
|---|---|---|
| 00-00001-00-RP | OREANA | 46 / 41 |
| ROUTE NO. | SECTION | CITY | TOTAL SHEETS | SHEET NO. |

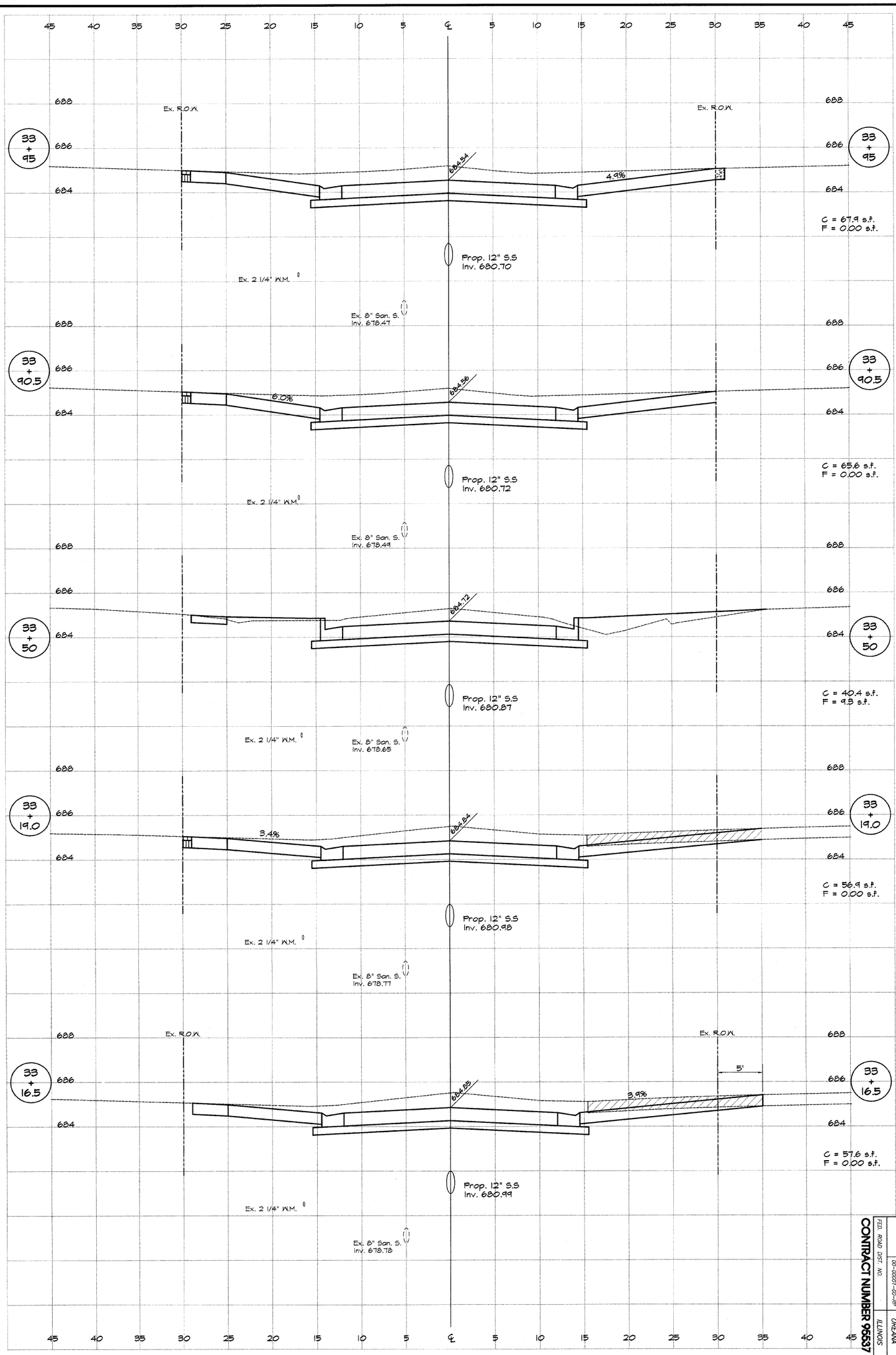


| ROUTE NO. | SECTION | CITY | TOTAL SHEETS | SHEET NO. |
|---|---|---|---|---|
| | 00-00001-00-RP | OREANA | 46 | 42 |

FED. ROAD DIST. NO. ILLINOIS

PROJECT HPP-0913 (001)

**CONTRACT NUMBER 95537**

SHEET NO. 42 OF 46

0 5 10
CROSS SECTION HORIZONTAL

0 2 4
CROSS SECTION VERTICAL

# VILLAGE OF OREANA, ILLINOIS

SAFE TEA - LU PROJECT

## CROSS SECTIONS
## BELLE STREET

STATION 33+16.5 TO 33+95.0

BAINBRIDGE GEE MILANSKI & ASSOCIATES, INC.
Consulting Engineers
1670 SOUTH TAYLORVILLE ROAD
DECATUR ILLINOIS
Illinois License 184-001255

| DESIGNED | SCALE |
|---|---|
| MHP | Hor. 1" = 5' Ver. 1" = 2' |
| DRAWN | DATE |
| Les Jenkins | May 2006 |
| FIELD BOOK | JOB NO. |
| XXX | 06-040A |

REVISIONS

| NO. | BY | DATE |
|---|---|---|
| | | |

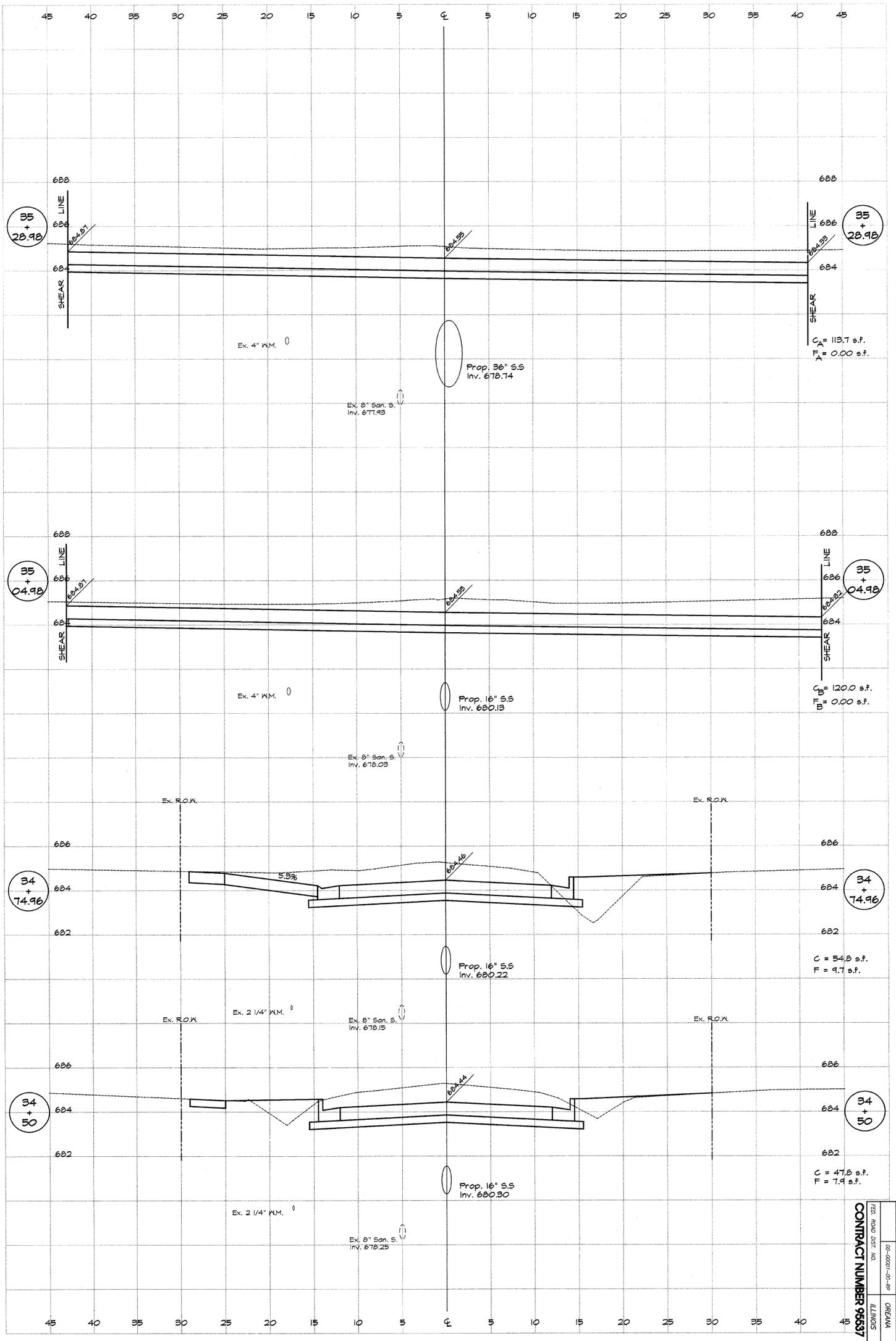


| ROUTE NO. | SECTION | CITY | TOTAL SHEETS | SHEET NO. |
|---|---|---|---|---|
| FED. ROAD DIST. NO. | 00-00001-00-RP | ILLINOIS | 46 | 43 |

**CONTRACT NUMBER 95537**

PROJECT HPR-0817 (001)

SHEET NO. 43 OF 46

CROSS SECTION HORIZONTAL 0 5 10

CROSS SECTION VERTICAL 0 2 4

# VILLAGE OF OREANA, ILLINOIS

SAFE TEA - LU PROJECT

## CROSS SECTIONS

STATION 34+50.0 TO 35+28.98

BAINBRIDGE & ASSOCIATES, INC.
Consulting Engineers
1670 SOUTH TAYLORVILLE ROAD
DECATUR ILLINOIS
Illinois License 184-001255

| DESIGNED | SCALE |
|---|---|
| MHP | Hor. 1" = 5' Ver. 1" = 2' |
| DRAWN | DATE |
| Les Jenkins | May 2006 |
| FIELD BOOK | JOB NO. |
| xxx | 06-040A |

REVISIONS

| NO. | BY | DATE |
|---|---|---|
| | | |

| ROUTE NO. | SECTION | CITY | TOTAL SHEETS | SHEET NO. |
|---|---|---|---|---|
| | 00-00001-00-RP | OREANA | 46 | 44 |
| FED. ROAD DIST. NO. | | ILLINOIS | PROJECT HPP-0913 (001) | |

**CONTRACT NUMBER 95537**




REVISIONS

| NO. | BY | DATE |
|---|---|---|
| | | |

SCALE: Hor. 1" = 5' Ver. 1" = 2'
DATE: May 2006
JOB NO.: 06-040A
DESIGNED: MMP
DRAWN: Lee Jenkins
FIELD BOOK: XXX

BANBRIDGE & ASSOCIATES, INC.
Consulting Engineers
1670 SOUTH TAYLORVILLE ROAD
DECATUR, ILLINOIS
Illinois License 184-001256

GEORGE MEZANSKI

# VILLAGE OF OREANA, ILLINOIS

SAFE TEA - LU PROJECT

## CROSS SECTIONS
## BELLE STREET
STATION 35+58.97 TO 38+90.0

CROSS SECTION HORIZONTAL: 0 5 10
CROSS SECTION VERTICAL: 0 2 4

SHEET NO. 44 OF 46

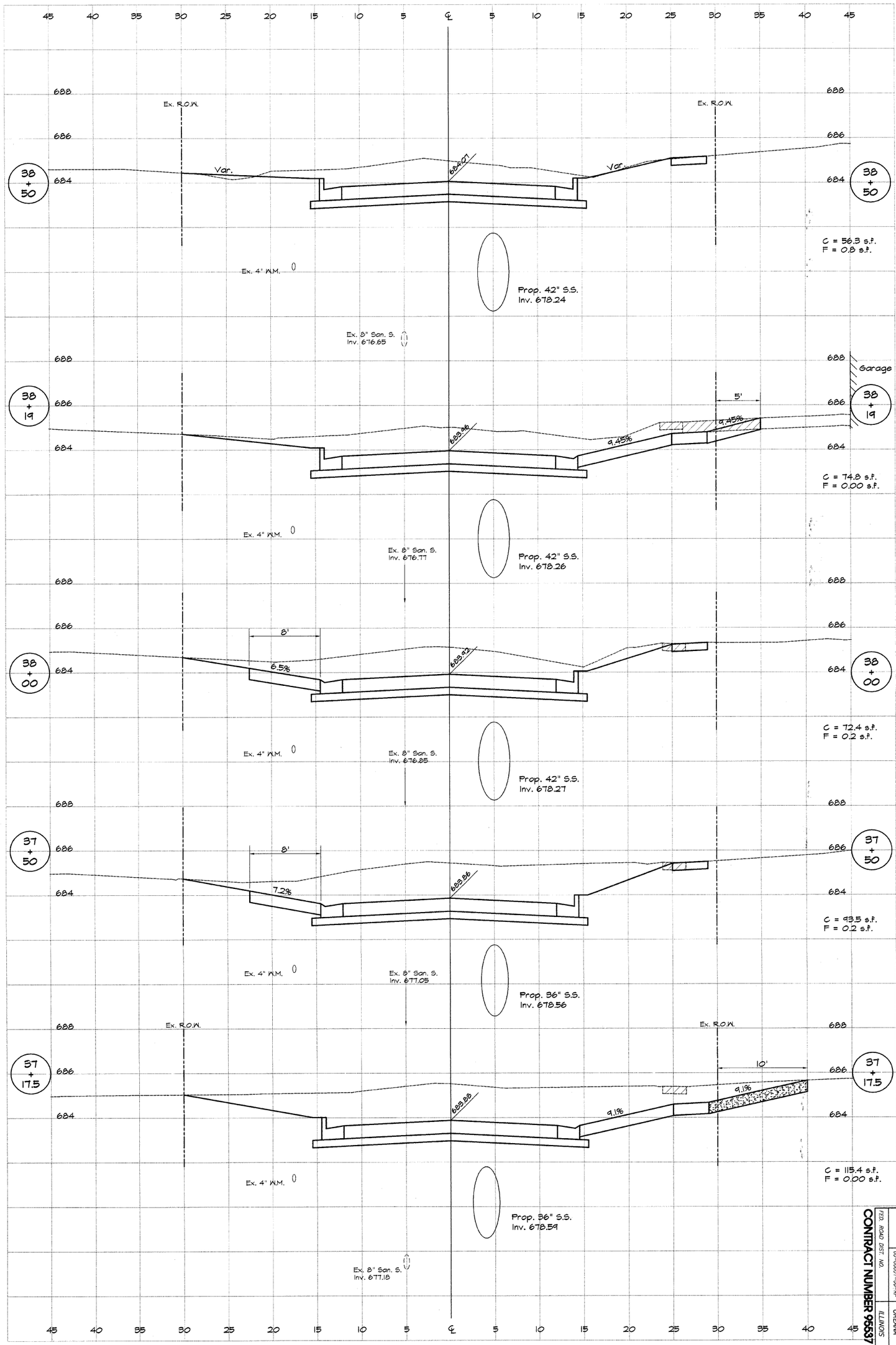


SHEET NO. 45 OF 46

CROSS SECTION HORIZONTAL 0 5 10

CROSS SECTION VERTICAL 0 2 4

# VILLAGE OF OREANA, ILLINOIS

SAFE TEA-LU PROJECT

## CROSS SECTIONS
## BELLE STREET

STATION 37+17.5 TO 38+50.0

BAINBRIDGE GEE MILANSKI & ASSOCIATES, INC.
Consulting Engineers
1670 SOUTH TAYLORVILLE ROAD
DECATUR ILLINOIS
Illinois License 184-001286

| DESIGNED | SCALE |
|---|---|
| MHP | Hor. 1" = 5' Var. 1" = 2' |
| DRAWN | DATE |
| Les Jenkins | May 2006 |
| FIELD BOOK | JOB NO. |
| XXX | 06-040A |

REVISIONS

| NO. | BY | DATE |
|---|---|---|
| | | |

| ROUTE NO. | SECTION | CITY | TOTAL SHEETS | SHEET NO. |
|---|---|---|---|---|
| FED. ROAD DIST. NO. | 09-00031-00-RP | OREANA | 46 | 45 |
| ILLINOIS | | | PROJECT HPP-891-3 (001) | |

CONTRACT NUMBER 95537

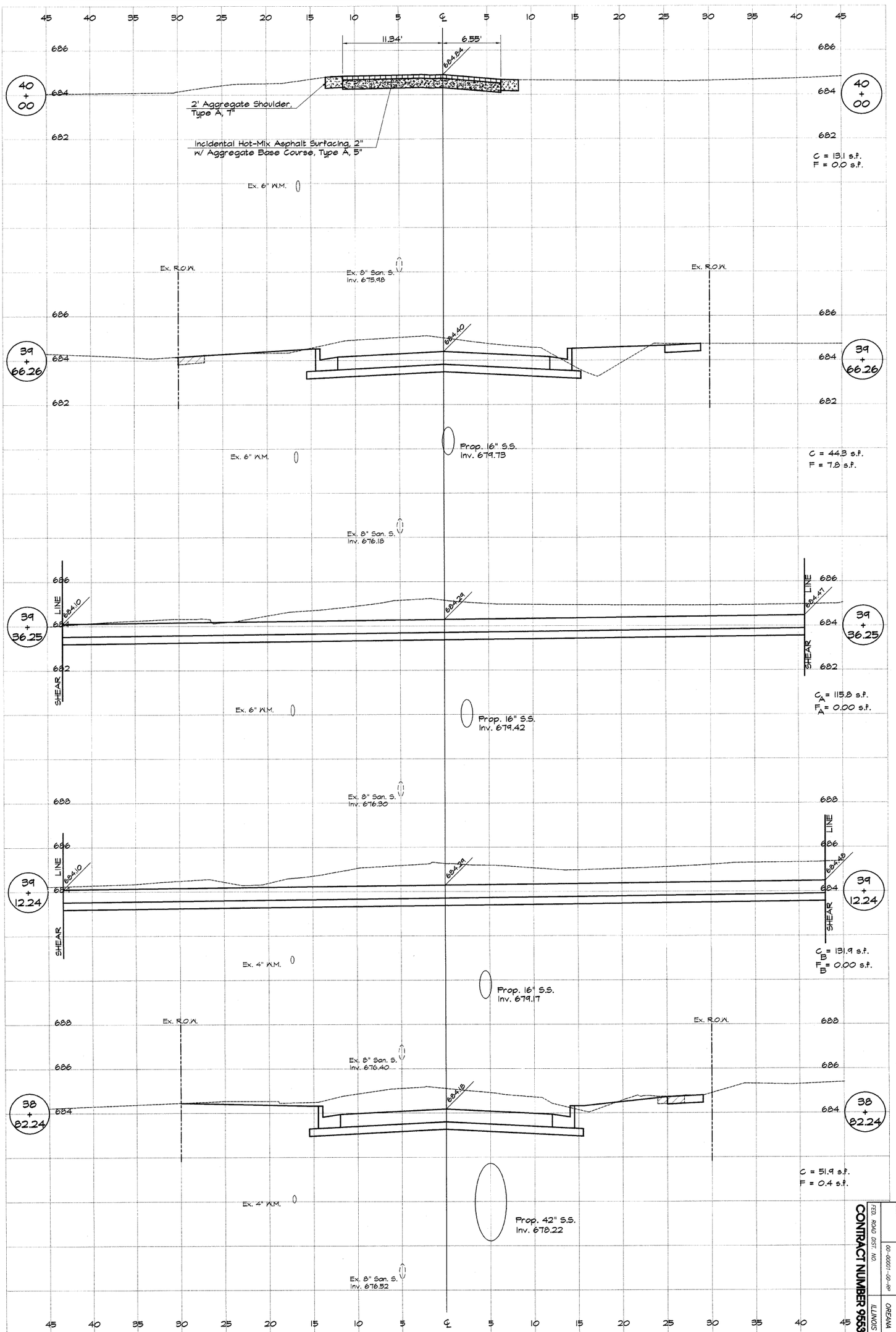


| ROUTE NO. | SECTION | CITY | TOTAL SHEETS | SHEET NO. |
|---|---|---|---|---|
| | 00-00001-00-RP | OREANA | 46 | 46 |
| FED. ROAD DIST. NO. | | ILLINOIS | PROJECT HPP-0013 (001) | |

CONTRACT NUMBER 95537

SHEET NO. 46 OF 46

CROSS SECTION HORIZONTAL 0 5 10

CROSS SECTION VERTICAL 0 2 4

**VILLAGE OF OREANA, ILLINOIS**
SAFE TEA - LU PROJECT

**CROSS SECTIONS**
**BELLE STREET**
STATION 38+82.24 TO 39+66.26

BAINBRIDGE GEE MILANSKI & ASSOCIATES, INC.
Consulting Engineers
1670 SOUTH TAYLORVILLE ROAD
DECATUR ILLINOIS
Illinois License 184-001255

| DESIGNED | SCALE |
|---|---|
| MHP | Hor. 1" = 5' Ver. 1" = 2' |
| DRAWN | DATE |
| Les Jenkins | May 2006 |
| FIELD BOOK | JOB NO. |
| XXX | 06-040A |

| REVISIONS | | |
|---|---|---|
| NO. | BY | DATE |