F.A.I. RTE.	SECTION	COUNTY	TOTAL SHEETS	SHEET NO.
94	1516.1 I-7	COOK	58	36
STA. 2212+06.20		TO STA. 2243+03.23		
FED. ROAD DIST. NO.	ILLINOIS	FED. AID PROJECT		

62971

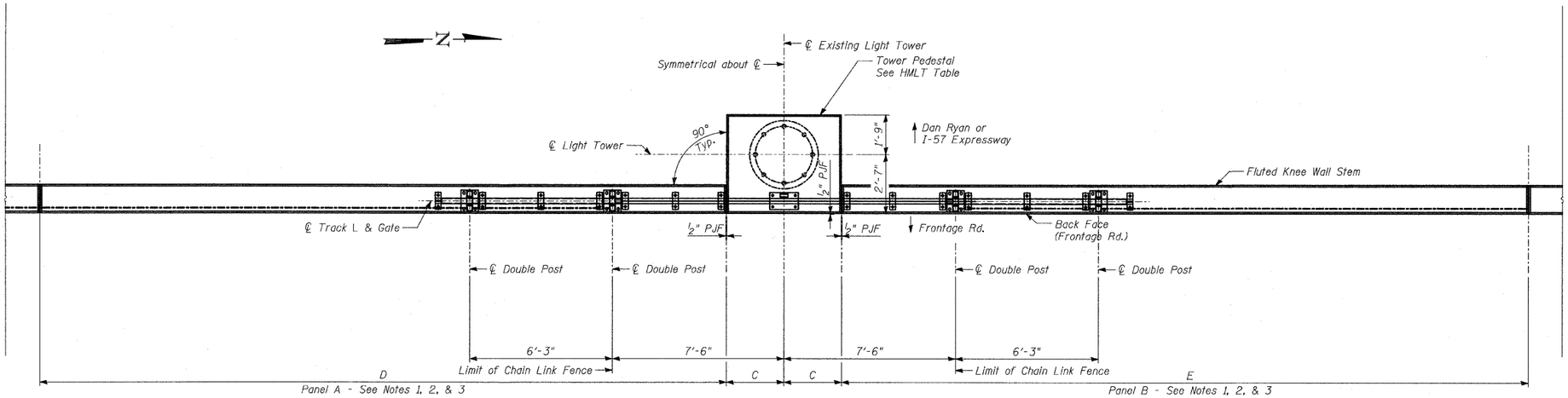

PLAN - LIMITS OF CHAIN LINK GATE ASSEMBLY IN OPEN POSITION

HMLT TABLE

HMLT	C	D	E
60MN3	2.02	29.65	26.31
600P2	2.52	20.03	17.00
600P3	2.52	30.00	30.00

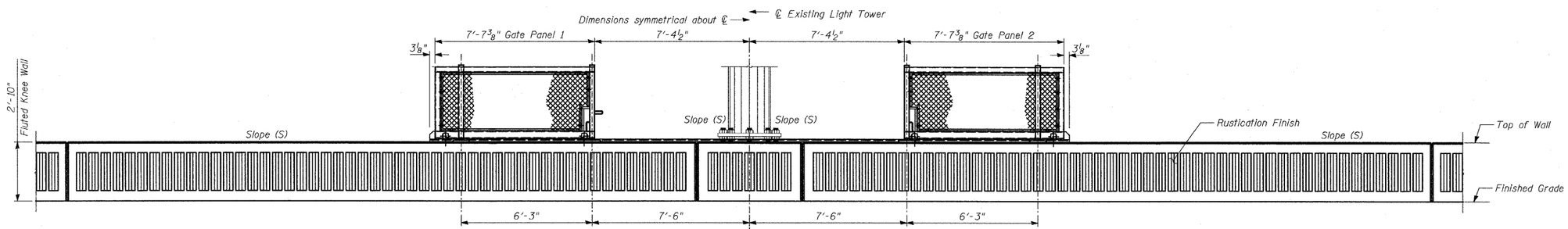

BACK FACE ELEVATION - LIMITS OF CHAIN LINK GATE ASSEMBLY IN OPEN POSITION

NOTES:

1. The Chain Link Gate Assembly (Special) is not included in this contract, but shall be furnished and installed by others in Contract 60A01.
2. Panels A & B shall be constructed to be aligned with the Back Face of existing High Mast Light Tower (HMLT).
3. The Slope (S) at the top of panels A & B and the HMLT foundation shall be the same.

TY·LIN INTERNATIONAL

REVISIONS	
NAME	DATE

ILLINOIS DEPARTMENT OF TRANSPORTATION

F.A.I. 94 (DAN RYAN EXPRESSWAY)
FLUTED KNEE WALL ALONG STATE ST.
94TH ST. TO N. OF 89TH ST. (PRIVATE)
FLUTED KNEE WALL AT HMLT

S.N.
SCALE: N.T.S.
DATE: OCTOBER 17, 2008

DESIGNED BY: MAF
DRAWN BY: MAF, TB
CHECKED BY: MI

p:\0237.3\structur\c250\fw25bdrsh033a.dgn 10/17/2008 11:33:50 AM