F.A.I. RTE.	SECTION	COUNTY	TOTAL SHEETS	SHEET NO.
94	1818 I-7	COOK	58	35
STA. 2339+42.81		TO STA. 2364+99.12		
FED. ROAD DIST. NO.	ILLINOIS	FED. AID PROJECT		

62975

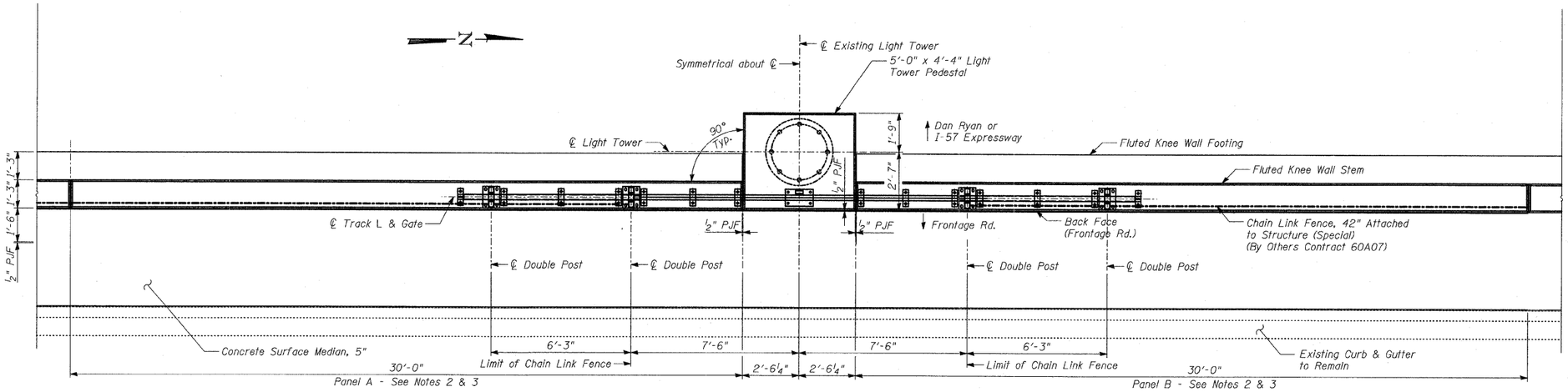

PLAN - CHAIN LINK GATE ASSEMBLY IN OPEN POSITION

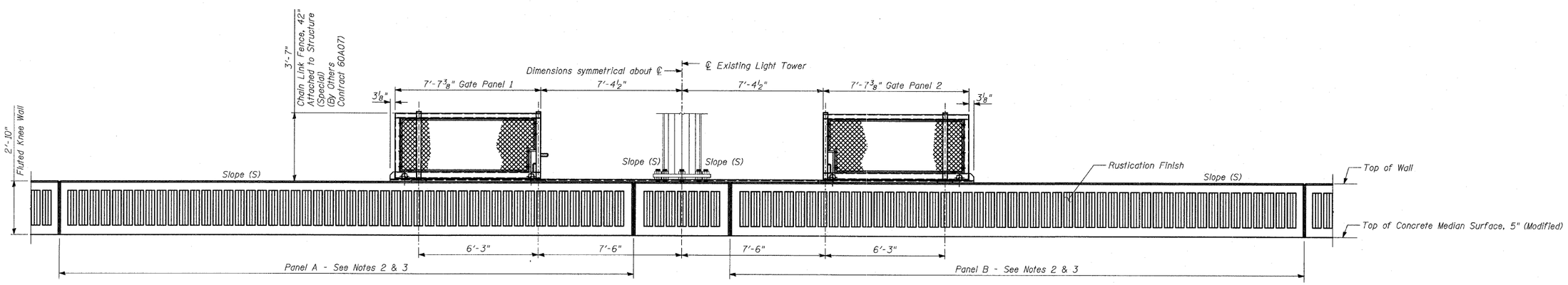

BACK FACE ELEVATION - LIMITS OF CHAIN LINK GATE ASSEMBLY IN OPEN POSITION

NOTES:

1. The Chain Link Gate Assembly (Special), and the Chain Link Gate (Special) are not included in this contract, but shall be furnished and installed by others in Contract 60A07.
2. Panels A & B shall be constructed to be aligned with the Back Face of existing High Mast Light Tower (HMLT).
3. The Slope (S) at the top of panels A & B and the HMLT foundation shall be the same.

TY·LIN INTERNATIONAL

REVISIONS	
NAME	DATE

ILLINOIS DEPARTMENT OF TRANSPORTATION

F.A.I. 94 (DAN RYAN EXPRESSWAY)
FLUTED KNEE WALL ALONG STATE ST.
N 75TH ST. TO S 72ND ST.
FLUTED KNEE WALL AT HMLT

S.N.
SCALE: N.T.S.
DATE: FEBRUARY 13, 2009

DESIGNED BY: MAF
DRAWN BY: MAF
CHECKED BY: MI

P:\0237-3\structur\c25f\w25fdrsh03.3.dgn
3/19/2009 2:15:08 PM