F.A.I. RTE.	SECTION	COUNTY	TOTAL SHEETS	SHEET NO.
59	*	WILL	608	390
STA.		TO STA.		
FED. ROAD DIST. NO. 1	ILLINOIS	FED. AID PROJECT		

* (26, 26HB-1 & 114) R-2
CONTRACT NO. 60363

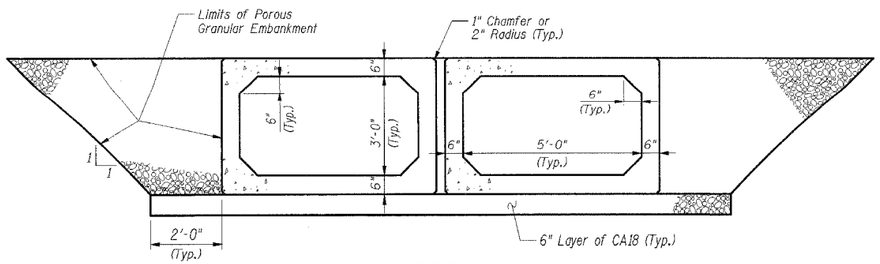

SECTION

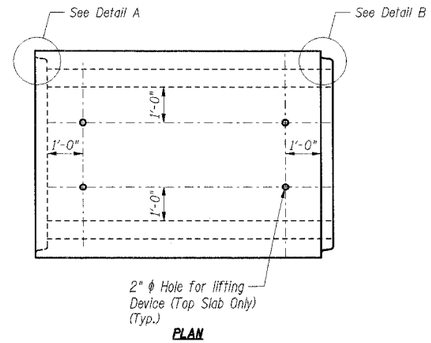

PLAN

(Location of lifting holes may be varied as needed to clear reinforcement)

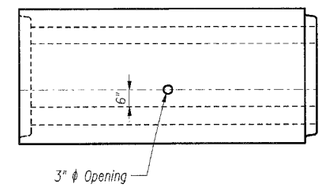

ELEVATION

BAR LIST

Bar	No.	Size	Length	Shape
b200	4	#4	15'-3"	
b201	2	#4	17'-4"	
b202	2	#4	19'-5"	
b203	4	#4	21'-1"	
d200	30	#4	5'-4"	
h200	2	#4	24'-3"	
h201	16	#4	5'-6"	
s200	8	#4	19'-3"	
v200	12	#4	8'-10"	

Item	Unit	Total
Reinforcement Bars***	lbs	520
Concrete Structures***	Cu Yd	9.0

*** For information only, cost included with Box Culvert End Section, Culvert No. 6.

STANDARD BOX CULVERT SECTION

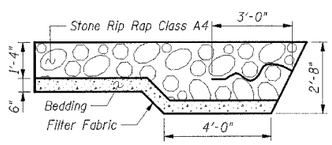

SECTION A-A

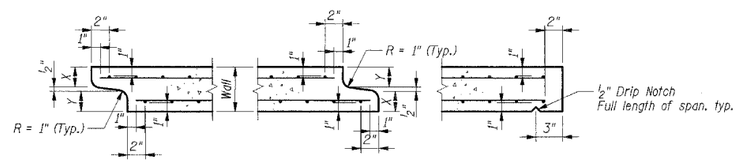

DETAIL A (Typ. Inlet End)

DETAIL B (Typ. Outlet End)

DETAIL C (Typ. Exposed End)

Note:
Inlet and outlet ends shall be compatible.

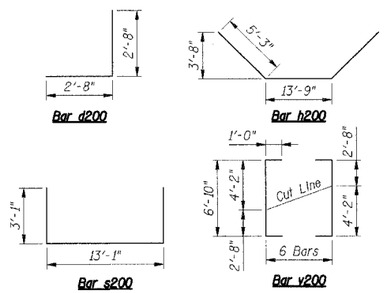

Reinforcement Notes:
(1) Bend bars in the field to fit as required.
(2) Cut bars according to Cutting Diagram and use remainder in opposite end.

Notes:
1. B.F. indicates Back Face
F.F. indicates Front Face
E.F. indicates Each Face

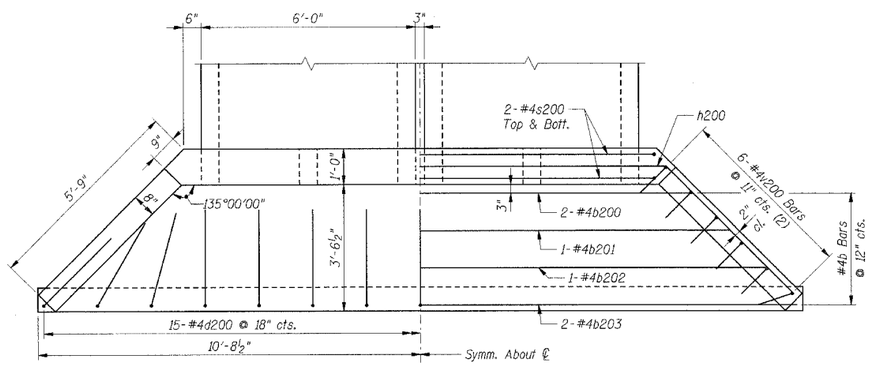

PLAN

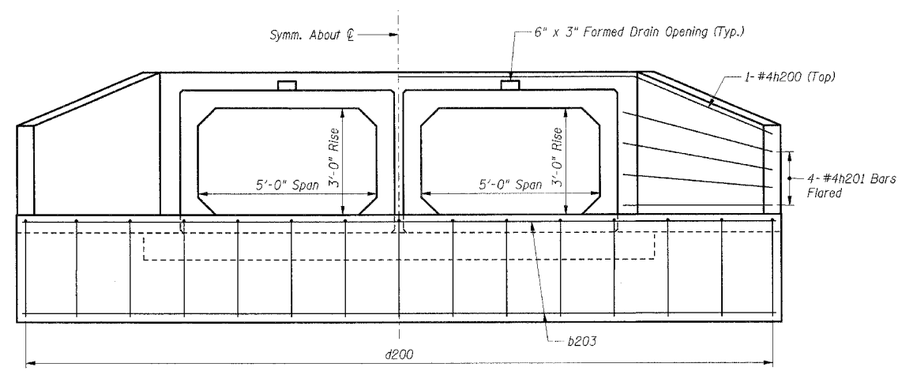

END ELEVATION

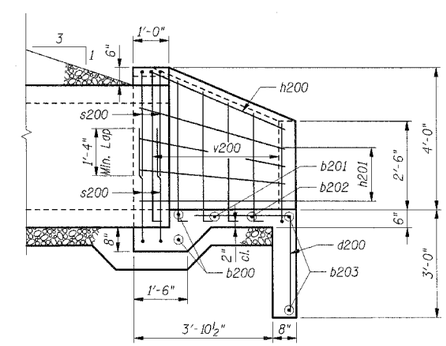

HALF SIDE ELEVATION

APRON END SECTION

SHT. BCE-2 OF BCE-3

REVISIONS	
NAME	DATE

ILLINOIS DEPARTMENT OF TRANSPORTATION
F.A.P. ROUTE 338 (ILLINOIS ROUTE 59)
SEIL ROAD DOUBLE BOX CULVERT
SECTION (26, 26HB-1 & 114) R-2
STRUCTURE NUMBER 099-C022
STATION 4016+73.50, WILL COUNTY

BOX CULVERT END SECTIONS

DRAWN BY: MDB
DATE: 03/14/08 CHECKED BY:

TENG

TENG & ASSOCIATES, INC.
ENGINEERING/ARCHITECTURE/PLANNING
300 N. MARTIGNY AVE. CITY, CHICAGO, IL 60651
TELEPHONE: 312-814-8000

\\BXCOOZTMJDGN, \\BXCOOZTMJDGN, \\BXCOOZTMJDGN, \\BXCOOZTMJDGN, \\BXCOOZTMJDGN, \\BXCOOZTMJDGN, \\BXCOOZTMJDGN, \\BXCOOZTMJDGN, \\BXCOOZTMJDGN, \\BXCOOZTMJDGN
3-12-2008,12:9:40 BONDHUJO
pen table: N/A T:\DOCUMENT\93799\STRUCT\DGN\BXCOOZTMJDGN color table: K:\STANDARD\ENG\DATA\COLORTABLE.TBL