STATE OF ILLINOIS
DEPARTMENT OF TRANSPORTATION

ROUTE NO.	SECTION	COUNTY	TOTAL SHEETS	SHEET NO.
346	*	LAKE	469	358
FED. ROAD DIST. NO.		ILLINOIS	FED. AID PROJECT-	

SHEET NO. - 8
13 - SHEETS

* 125X-HB-(1&2) R-1 CONTRACT # 60826

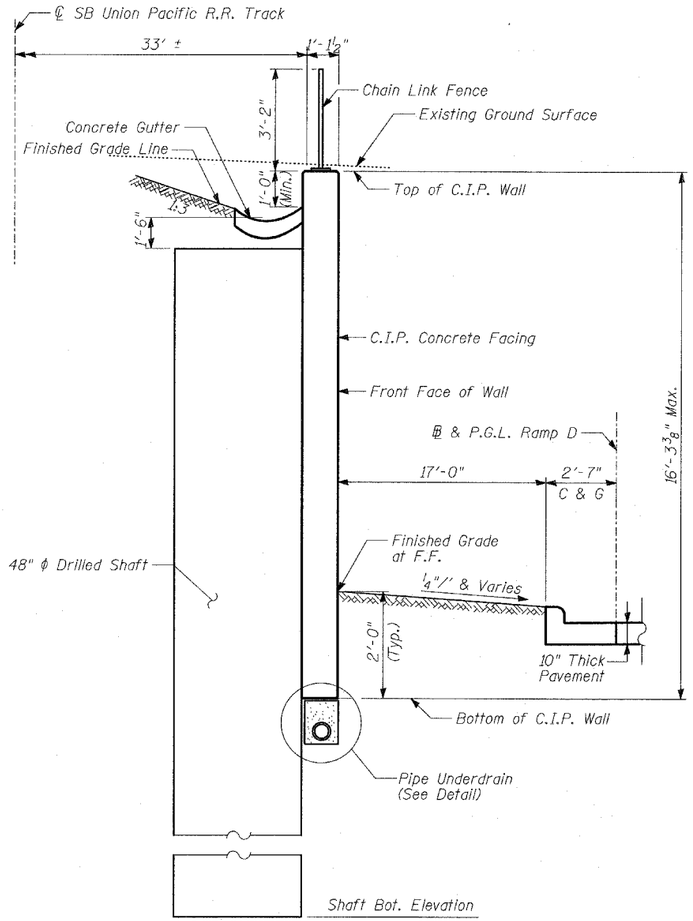

SECTION B-B
Sta. 401+57.09 to Sta. 402+17.09
(Tangent Pile Wall)

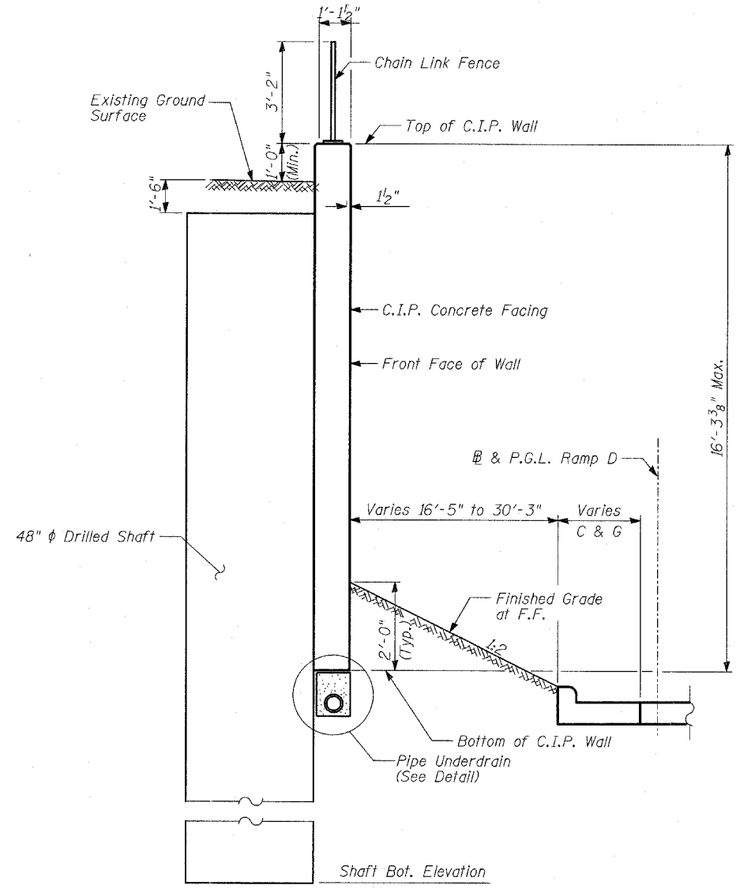

SECTION C-C
Sta. 400+84.81 to Sta. 401+57.09
(Tangent Pile Wall)

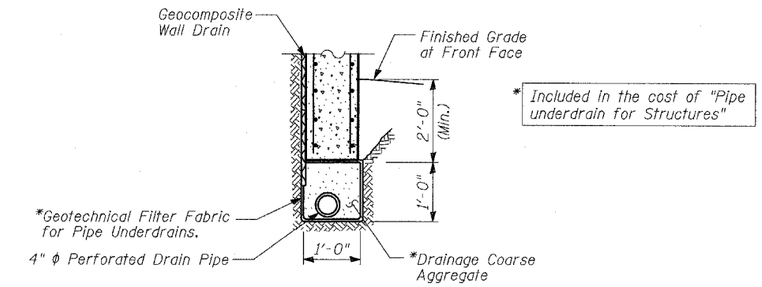

PIPE UNDERDRAIN DETAIL
BETWEEN DRILLED SHAFTS

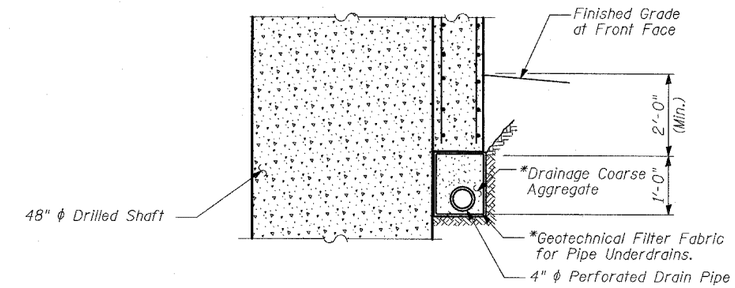

PIPE UNDERDRAIN DETAIL
AT DRILLED SHAFT

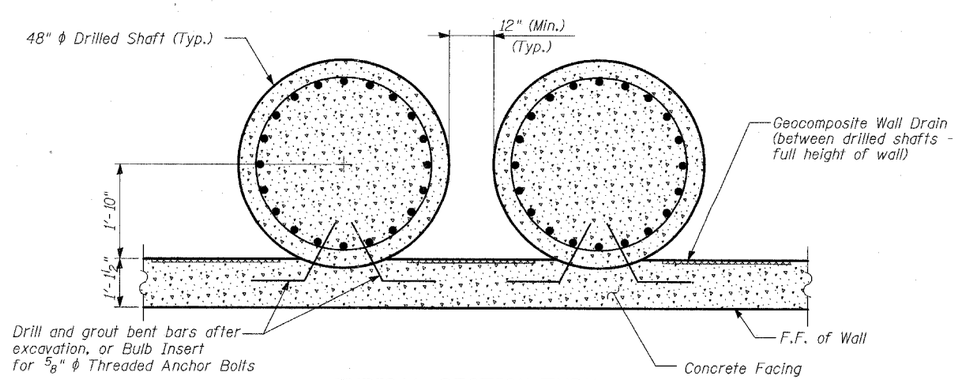

TYPICAL SECTION THRU
TANGENT PILE WALL

TY·LIN INTERNATIONAL

DESIGNED	- MB
CHECKED	- AD
DRAWN	- DE
CHECKED	- CM, AD

WALL Q
DETAILS (2 OF 2)

FAP 346 (U.S. ROUTE 41 - SKOKIE HIGHWAY) OVER ILLINOIS ROUTE 132
SECTION 125X-HB-(1&2)R-1
LAKE COUNTY
S.N. 049-W038