TOTAL BILL OF MATERIAL

DESCRIPTION	UNIT	SUPER.	SUB.	TOTAL	
Removal of Existing Superstructures No. 2 △1	Each	1	-	1	
Floor Drains	Each	4	-	4	
Concrete Superstructure	Cu. Yd.	34.2	-	34.2	
Bridge Deck Grooving	Sq. Yd.	258	-	258	
Protective Coat	Sq. Yd.	386	-	386	
Concrete Wearing Surface, 5"	Sq. Yd.	292	-	292	
Precast Prestressed Concrete Deck Beams (11" Depth)	Sq. Ft.	3,236	-	3,236	
Furnishing & Erecting Structural Steel	Pound	2,000	-	2,000	
Reinforcement Bars, Epoxy Coated	Pound	6,940	-	6,940	
Bar Splicers	Each	44	-	44	
Silicone Joint Sealer, $1\frac{3}{4}$"	Foot	74	-	74	
Structural Repair of Concrete (Depth Greater Than 5 In.)	Sq. Ft.	-	9	9	✳
Structural Repair of Concrete (Depth Equal to or Less Than 5 In.)	Sq. Ft.	-	139	139	✳
Name Plates	Each	1	-	1	
Temporary Wall Bracing System	Lump Sum	1	-	1	

✳ Based on the Field Notes from I.D.O.T. Maintenance Engineers, dated September, 2007

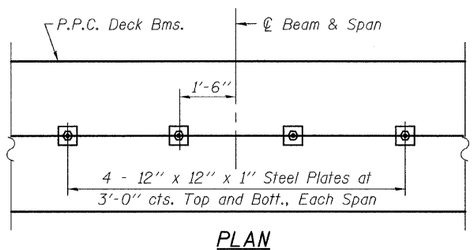

PLAN

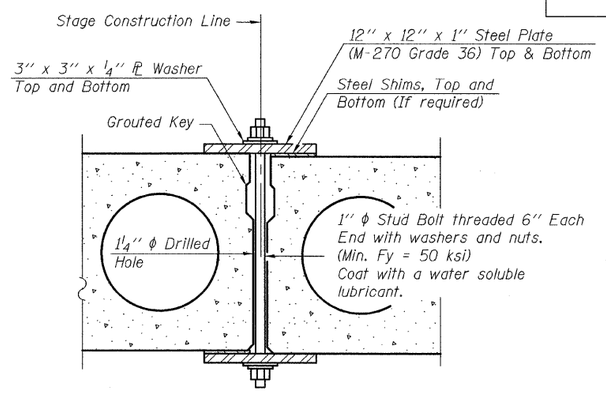

SECTION

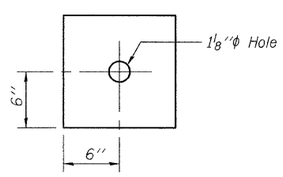

CLAMPING PLATE

SHEAR KEY CLAMPING DETAILS AT STAGE CONST. JT.

Cost included with Precast Prestressed Concrete Deck Beams.
See Stage Construction Details for traffic lanes.

NOTES:

As an alternate to Drilled Holes, the Contractor may request the Fabricator to cast 2" Dia. Semi-Circular Recesses in the side of each Beam adjacent to the Stage Construction Line.

These Recesses must align to form a hole at the correct location for the Clamping Device Bolts.

If the Contractor elects to use this Alternate, a Detail of the 2" Dia. Semi-Circular Recesses must be shown on the Shop Drawings.

GENERAL NOTES:

1. Plan dimensions and details relative to existing plans are subject to routine varations. The Contractor shall field verify existing dimensions and details affecting new construction and make necessary approved adjustments prior to construction or ordering of materials. Such variations shall not be cause for additional compensation for a change in the scope of work, however, the Contractor will be paid for the quantity actually furnished based upon the unit price bid for the work.
2. The Reinforced Concrete Overlay, as specified on the plan details, shall be paid for at the Contract Unit Price Bid per Square Yard for "Concrete Wearing Surface" and pounds for "Reinforcement Bars, Epoxy Coated".
3. Reinforcement Bars shall conform to the requirements of ASTM A 706, Grade 60 (IL. Modified). See Special Provisions.
4. Reinforcement Bars designated (E) shall be Epoxy Coated.
5. The minimum thickness of the Concrete Overlay shall be 5 inches and varies as required to adjust for the new Profile Grade and Beam Camber.
6. The Contractor is advised that the existing PPC Deck Beams are in a deteriorated condition with reduced load carrying capacity. It is the Contractor's responsibility to account for the condition of the Beams when developing Construction Procedures for Removal and Replacement of the Superstructure.
7. If the Contractor's procedure for existing Beam Removal or Placement of new Beams involves placement of heavy equipment on the new Deck Beams, a detailed procedure shall be submitted to the Engineer for approval. The procedure shall include calculations, sealed by an Illinois Licensed Structural Engineer, verifying the Structural adequacy of the Beams for the Proposed Load.
8. Any damage done to the Bridge during Beam removal shall be repaired by the Contractor. Cost is to be included with "Removal of Existing Superstructures".
9. Temporary Concrete Barrier shall only be anchored into the Concrete Overlay and not into the Precast Prestressed Concrete Deck Beams.
10. All Structural Steel shall be Shop Painted with the Inorganic Zinc Rich Primer per AASHTO M300, Type 1. Cost included with "Furnishing and Erecting Structural Steel".
11. No in-stream work will be allowed on this Project.
12. Slipforming of the Parapets is not allowed.
13. Repair of the abutments and piers shall be completed prior to placement of the new deck beams.

CHRISTIAN-ROGE & ASSOCIATES, INC.
ENGINEERS / PLANNERS / SURVEYORS
211 W. WACKER DRIVE CHICAGO, IL. 60606
PHONE: (312)372-2023 FAX: (312)372-5274

△1 Rev. 7-15-08

FILE NAME = gen_notes.sht	USER NAME = IDOT	DESIGNED - B.N.S.	REVISED -
		DRAWN - D.L. / F.M.	REVISED -
	PLOT SCALE = 1.0000 ' / IN.	CHECKED - B.N.S. / J.C.N.	REVISED -
	PLOT DATE = 4/30/2008	DATE - APRIL 21, 2008	REVISED -

STATE OF ILLINOIS
DEPARTMENT OF TRANSPORTATION

GENERAL NOTES & TOTAL BILL OF MATERIAL
HIGGINS ROAD (IL. RTE. 72) OVER SALT CREEK **S.N. 016-0504**

SCALE: NONE | SHEET NO. S2 OF S12 SHEETS | STA. | TO STA.

F.A.P. RTE.	SECTION	COUNTY	TOTAL SHEETS	SHEET NO.
559/341	2008-007 B	COOK	39	25
		CONTRACT NO. 60D55		

FED. ROAD DIST. NO. | ILLINOIS | FED. AID PROJECT