CONTRACT NO. 63023

Engineering Enterprises, Inc.

F.A. RTE.	SECTION	COUNTY	TOTAL SHEETS	SHEET NO.
N/A	06-00017-00-PV	KANE	232	18
STA.		TO STA.		
FED. ROAD DIST. NO. _	ILLINOIS	FED. AID PROJECT		

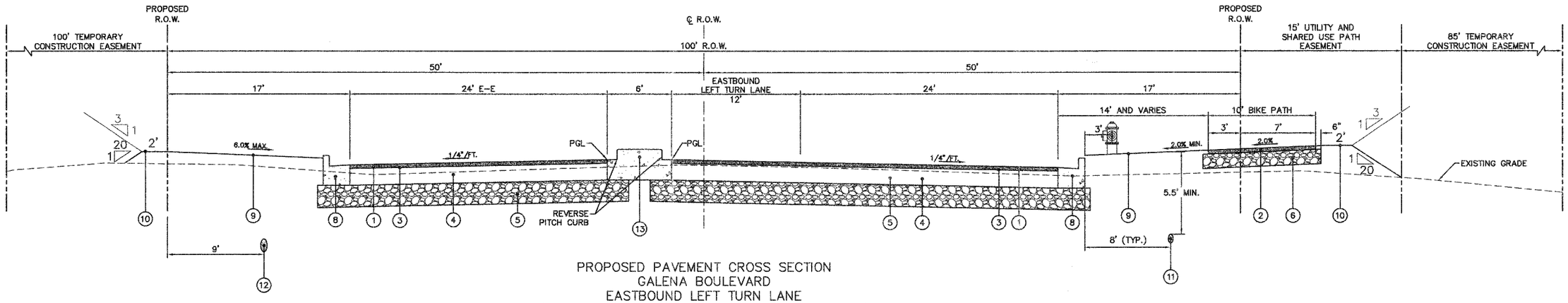

PROPOSED PAVEMENT CROSS SECTION
GALENA BOULEVARD
EASTBOUND LEFT TURN LANE
(SEE PLAN AND PROFILE SHEETS FOR LOCATION)

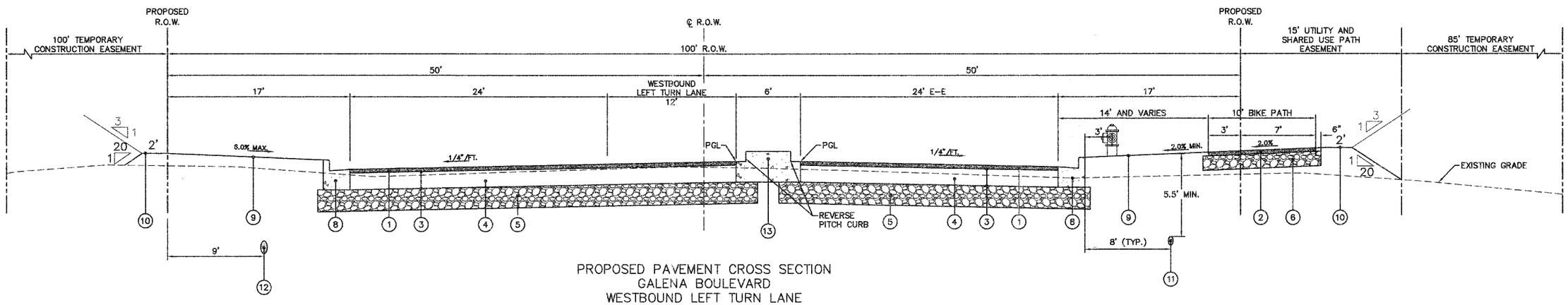

PROPOSED PAVEMENT CROSS SECTION
GALENA BOULEVARD
WESTBOUND LEFT TURN LANE
(SEE PLAN AND PROFILE SHEETS FOR LOCATION)

LEGEND

1. HOT-MIX ASPHALT SURFACE COURSE, MIX "D", N70, 2" (STA. 200+50 TO 224+00)
   POLYMERIZED HOT-MIX ASPHALT SURFACE COURSE, MIX "F", N90, 2" (STA. 224+00 TO 229+87)
2. HOT-MIX ASPHALT SURFACE COURSE, MIX "C", N50, 2"
3. BITUMINOUS MATERIAL (PRIME COAT)
4. HOT-MIX ASPHALT BINDER COURSE, IL-19.0, N70, 9.5" (STA. 200+50 TO 224+00)
   HOT-MIX ASPHALT BINDER COURSE, IL-19.0, N90, 9.5" (STA. 224+00 TO 229+87) Δ1
5. AGGREGATE SUBGRADE, 12"
6. SUB-BASE GRANULAR MATERIAL, TYPE B, 8"
7. COMBINATION CONCRETE CURB AND GUTTER, B-6.12
8. COMBINATION CONCRETE CURB AND GUTTER, B-6.24
9. 4" TOPSOIL, SEEDING CLASS 1A, AND MULCH METHOD 3"
10. 4" TOPSOIL, SEEDING CLASS 2, AND MULCH METHOD 3
11. WATER MAIN
12. STORM SEWER
13. CONCRETE MEDIAN, TYPE SB-6.12

Δ1 REVISED 7/11/08

REVISIONS	
NAME	DATE

ILLINOIS DEPARTMENT OF TRANSPORTATION

TYPICAL CROSS SECTIONS

SCALE: NTS
DATE: 02/07/08
DRAWN BY:
CHECKED BY: WBR

PLAN — SURVEYED / PLOTTED / ALIGNMENT CHECKED / R.O.W. CHECKED / NOTE BOOK / NO. / DATE / BY

PROFILE — SURVEYED / PLOTTED / GRADES CHECKED / STRUCTURE NOTATIONS CHKD / NOTE BOOK / NO. / DATE / BY

Plotted: July 7, 2008 @ 1:42 PM By: Kris Pung – Tab: 18 SEC (22x34)

Path:H:\SDSKPROJ\SG0546\DWG\SG0732\DWG FINAL ENG\CONTRACT B\B-SG0546-TYPSEC