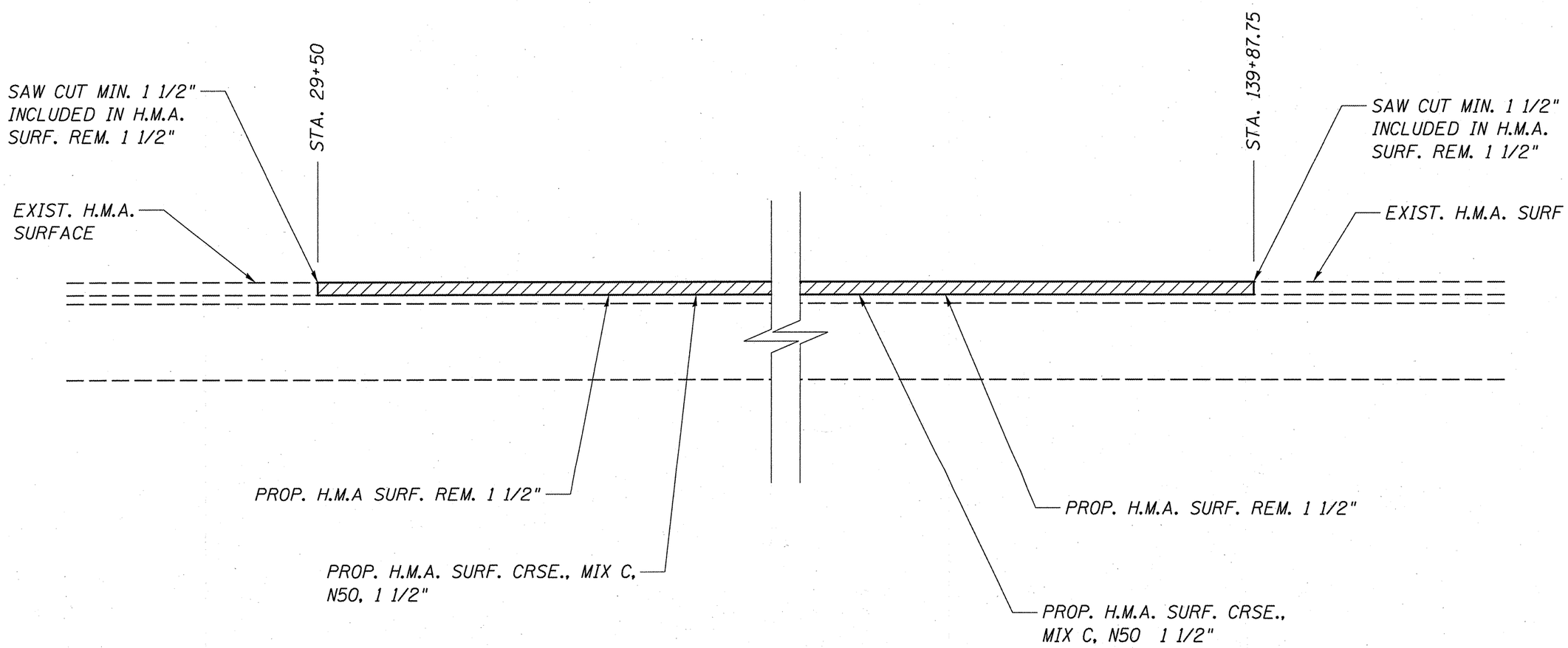

BUTT JOINT
FAP 733 (IL 94)
SECTION 1 RS-3
HANCOCK COUNTY