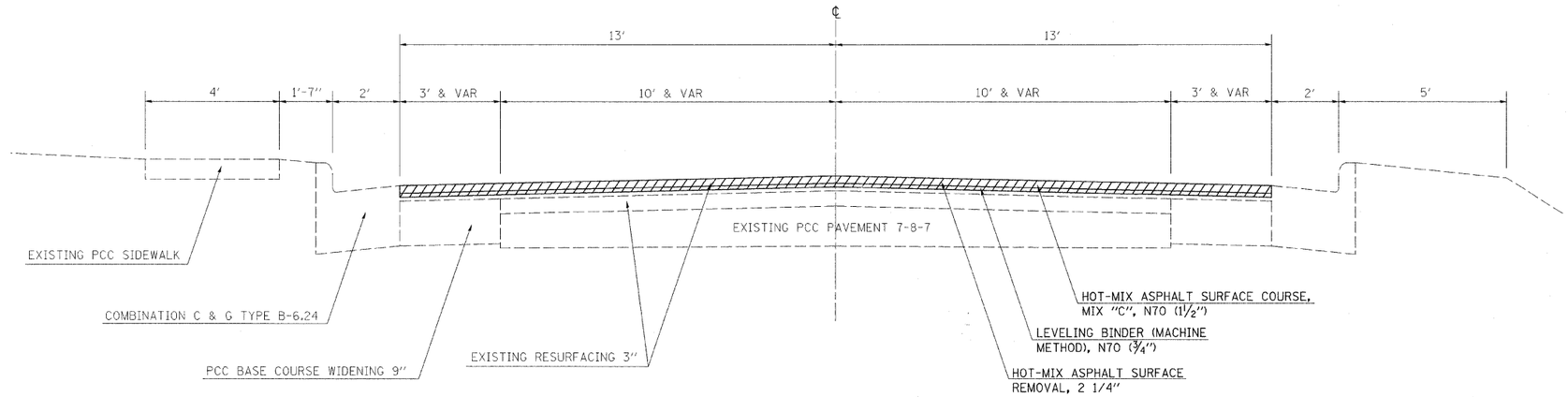

TYPICAL CROSS SECTION

STA 2+68 TO STA. 0+00
STA. EQ. 0+00 BK = STA. 100+00 AH
STA. 100+00 TO STA. 93+50

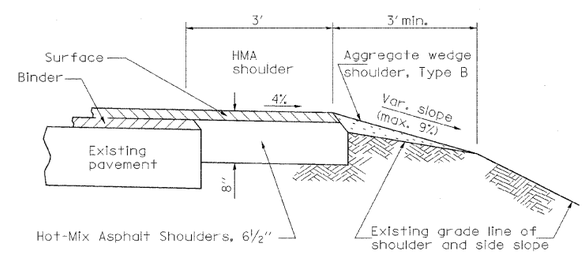

HMA SHOULDER AND AGGREGATE WEDGE WITH RESURFACING

STA. 150+50 TO STA. 147+50 EB
STA. 119+00 TO STA. 110+50 WB
STA. 109+50 TO STA. 100+50 EB
STA. 77+50 TO STA. 66+00 WB
STA. 65+50 TO STA. 64+60 EB
STA. 63+00 TO STA. 49+50 EB

FILE NAME = c:\projects\74057d\shttypical_74057.dgn	USER NAME = swartzrw	DESIGNED -	REVISED -	STATE OF ILLINOIS DEPARTMENT OF TRANSPORTATION	TYPICAL CROSS SECTIONS			F.A.S RTE.	SECTION	COUNTY	TOTAL SHEETS / SHEET NO.
		DRAWN -	REVISED -					2793	(O,P,Y)RS-1	FAYETTE	52 / 11
	PLOT SCALE = 20.0000 ′/ IN.	CHECKED -	REVISED -							CONTRACT NO. 74057	
	PLOT DATE = 5/14/2008	DATE -	REVISED -		SCALE: NA	SHEET NO. 7 OF 7 SHEETS	STA. TO STA.	FED. ROAD DIST. NO.	ILLINOIS	FED. AID PROJECT	