STATE OF ILLINOIS
DEPARTMENT OF TRANSPORTATION

ROUTE NO.	SECTION	COUNTY	TOTAL SHEETS	SHEET NO.
F.A.S. 1832	5BR-2	WASHINGTON	97	77
FED. ROAD DIST. NO. 7		ILLINOIS	FED. AID PROJECT-	

SHEET NO. 7
12 SHEETS

Contract #76949

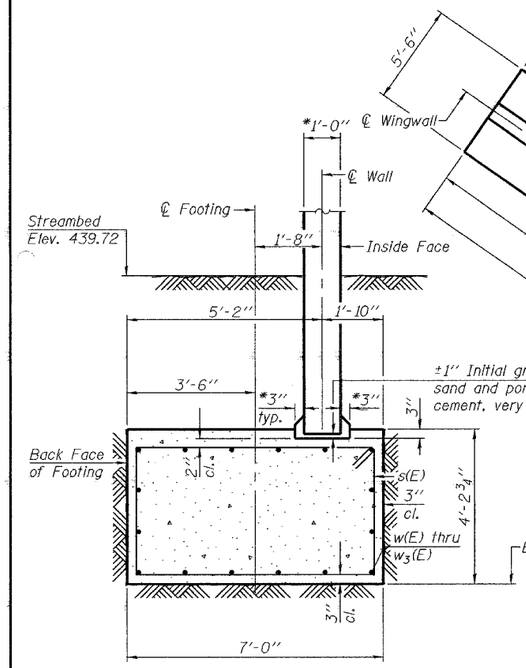

SECTION A-A

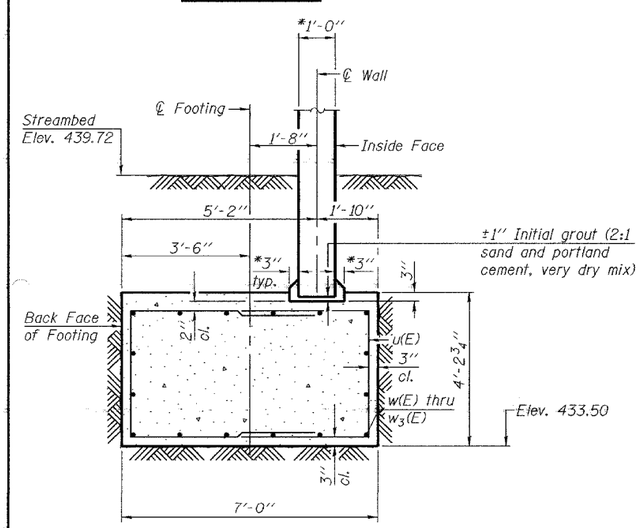

SECTION B-B

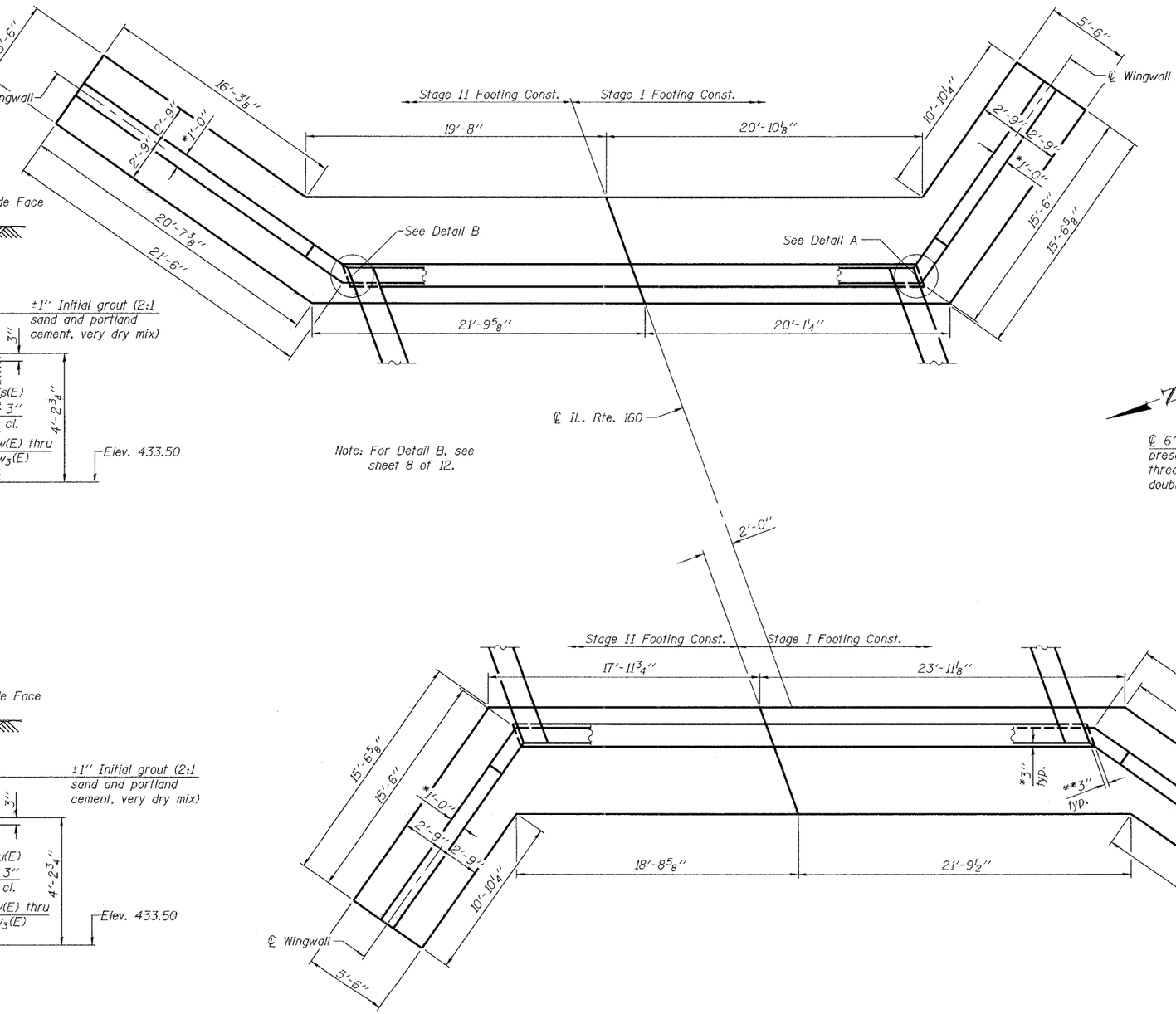

Note: For Detail B, see sheet 8 of 12.

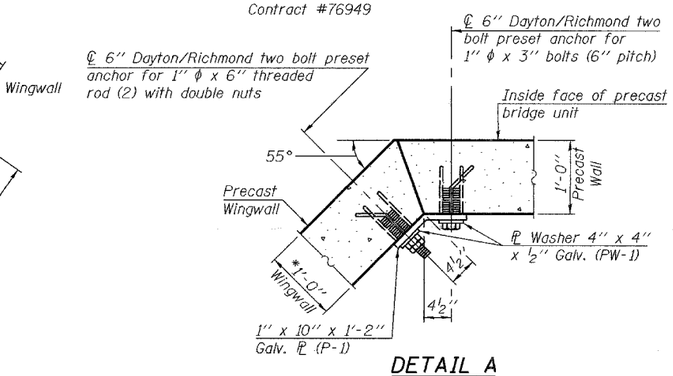

DETAIL A
(At Unit Leg/ S.E. or N.W.)

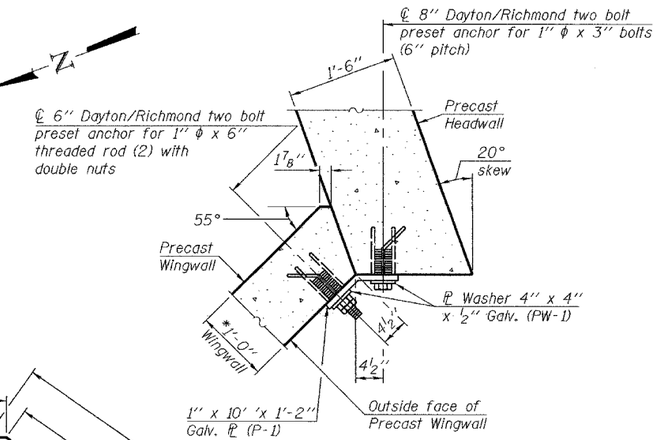

DETAIL A
(At Headwall; S.E. or N.W.)

Note: Connection ℄ (P-1) shall be positioned with small ϕ holes toward precast headwall.

*Slab and wall thickness and shape may vary as per manufacturer's design.
**May vary due to tolerances in the precast unit.

DESIGNED	Nicholas R. Barnett
CHECKED	Ray Ahanchi
DRAWN	Gregory D. Farmer
CHECKED	NRB/GRA

January 28 2008
EXAMINED Thomas J. Domagalski
ENGINEER OF BRIDGE DESIGN
PASSED Ralph E. Anderson
ENGINEER OF BRIDGES AND STRUCTURES

FOOTING DETAILS
F.A.S. RTE. 1832 - SEC. 5BR-2
WASHINGTON COUNTY
STATION 1511+01.00
STRUCTURE NO. 095-0078

\projects\farmergd\095007B.dgn 1/23/2008 4:03:56 PM