CONTRACT NO. 93466

ROUTE NO.	SECTION	COUNTY	TOTAL SHEETS	SHEET NO.
TR 50	*	SANGAMON SHELBY	20	18
FED. ROAD DIST. NO. 7		ILLINOIS	PROJECT	

*04-12112-00-BR

SHEET 3 OF 5

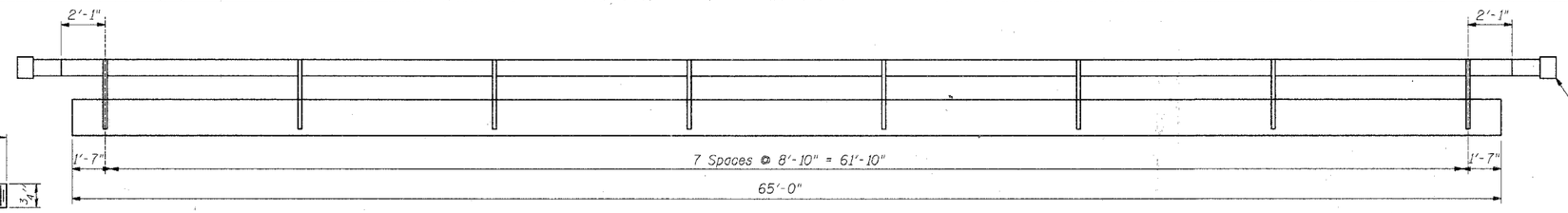

OUTSIDE ELEVATION

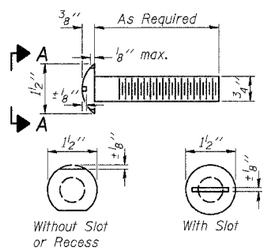

VIEW A-A
ROUND HEAD BOLT

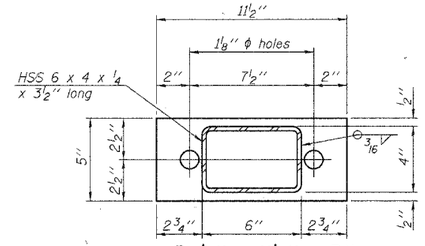

PL 1/2" x 11 1/2" x 5"

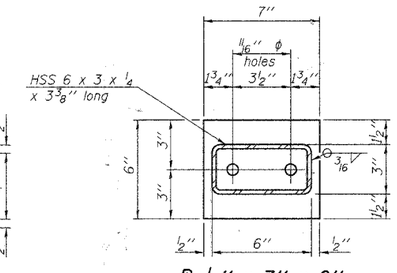

PL 1/2" x 7" x 6"

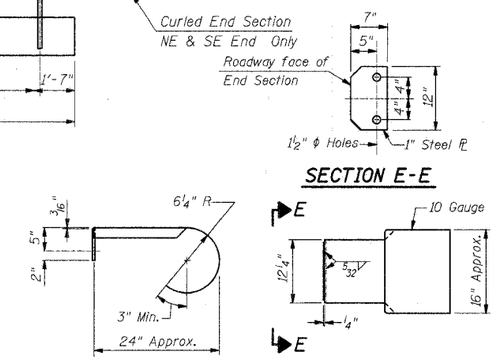

SECTION E-E

CURLED END SECTION DETAILS

(Cost included with Type S-1 Rail)

Notes:

All field drilled holes shall be coated with an approved zinc rich paint before erection.

For multi-span bridges, sufficient 1/4" x 6" x 1'-2" galvanized steel shims shall be provided to align rail between adjacent spans. Cost included with Steel Railing, Type S-1.

All steel rail elements shall be galvanized according to Article 509.05 of the Standard Specifications.

*** The studs of the anchor devices shall be placed below the top reinforcement bars and the outermost longitudinal reinforcement bar shall be placed directly above the studs of the rail post anchor device.

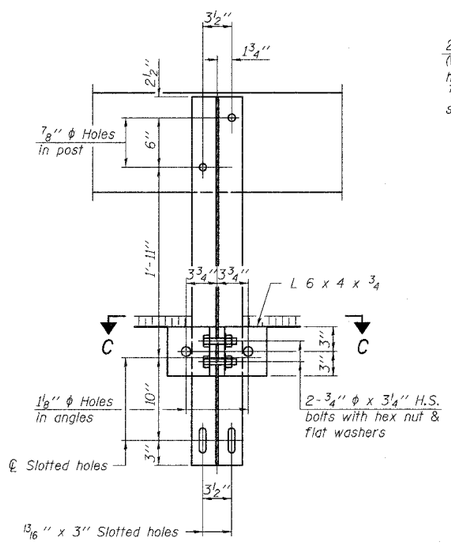

SECTION B-B

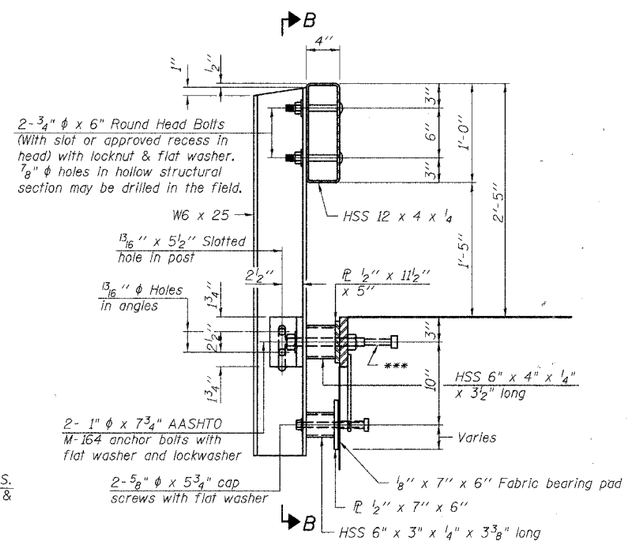

SECTION AT RAILING POST

** Whenever the lower insert assemblies interfere with strand locations, the #3 bars shall be cut and adjusted in order to allow raising or lowering of the lower inserts. Maximum adjustment not to exceed 1/2".

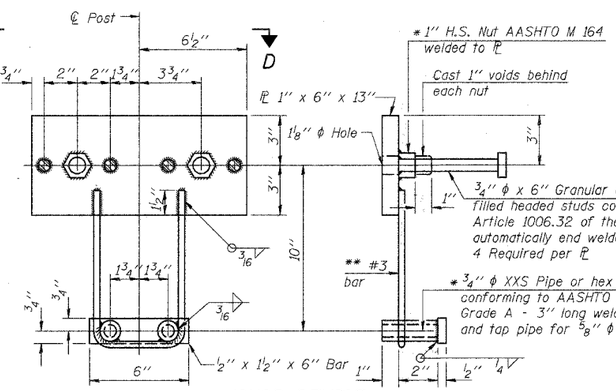

ANCHOR DEVICE

* Threaded areas shall be plugged or blocked off during casting of beam.

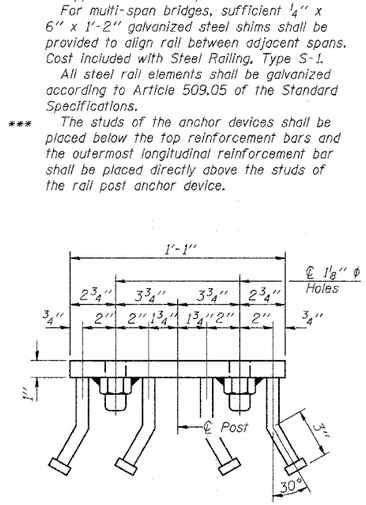

VIEW D-D

BILL OF MATERIAL

Item	Unit	Quantity
Steel Railing Type S-1	Foot	132

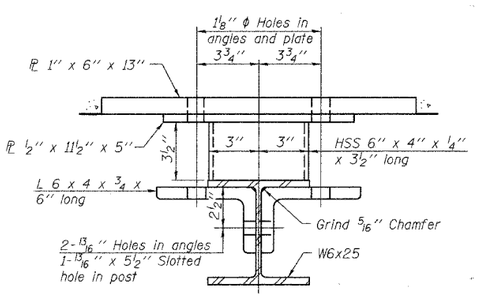

SECTION C-C

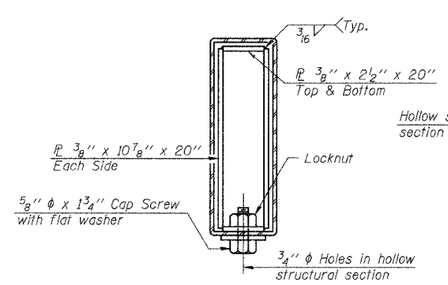

SECTIONS AT RAIL SPLICE

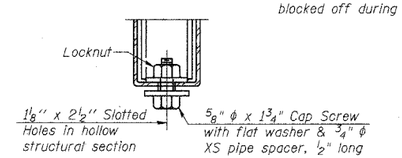

RAIL SPLICE CONNECTION AT EXPANSION JT.

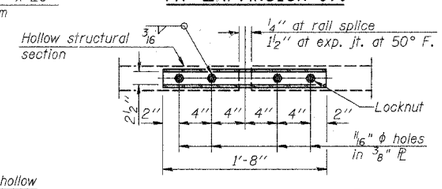

PLAN-BOTT. SPLICE PL TYPICAL

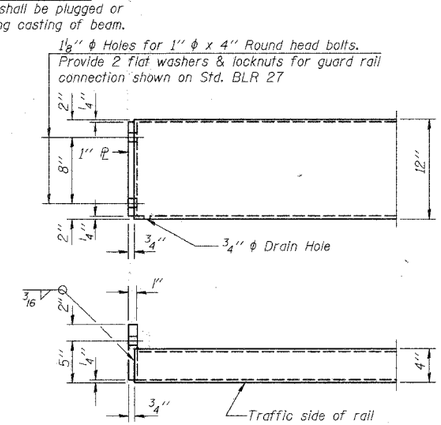

END OF RAIL DETAILS

STEEL RAILING TYPE S-1 DETAILS
T.R. 50 OVER LONG GROVE CREEK
SECTION 04-12112-00-BR
CHRISTIAN COUNTY
S.N. 011-3403
STA. 19+55.00

ie consultants

DESIGNED: SCD CHECKED: DRB
DRAWN: TRF DATE: FEB. 2008

$FILE$