CONTRACT #99324

All other steel shapes and plates shall conform to the requirements of

All field drilled holes shall be coated with an approved zinc rich paint before erection.

the angles to the concrete shall be tightened to a snug fit and given

tightened to a snug fit only.

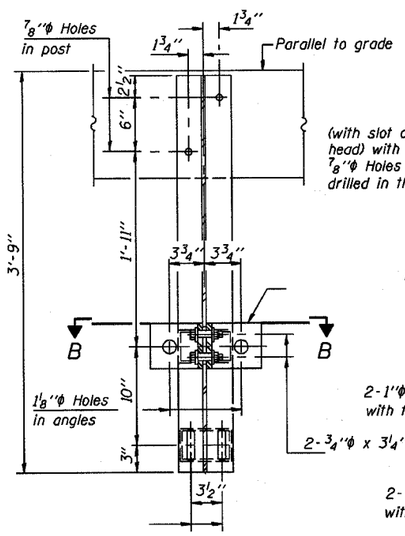

SECTION A-A

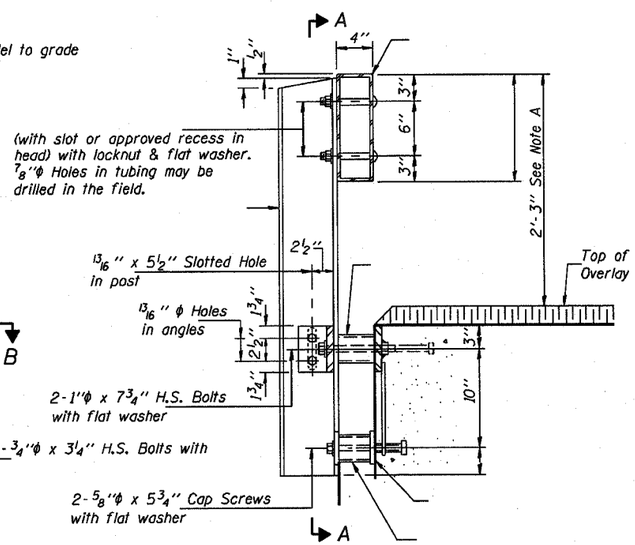

SECTION AT RAIL POST

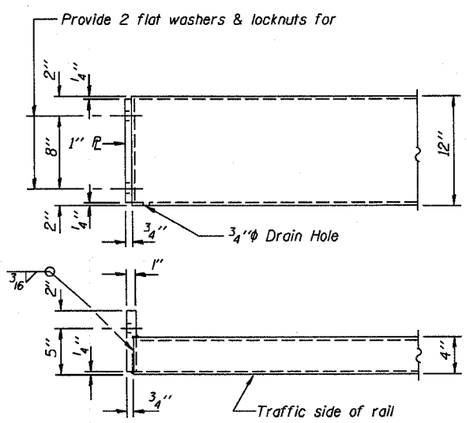

END OF RAIL DETAILS

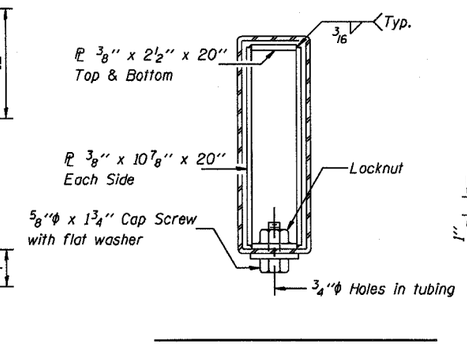

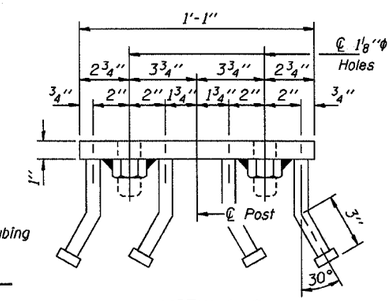

VIEW C-C

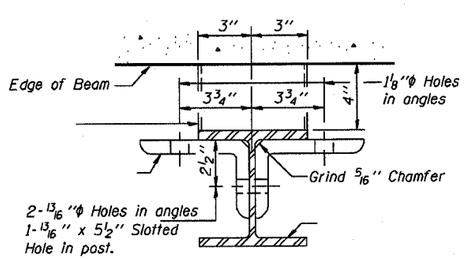

SECTION B-B

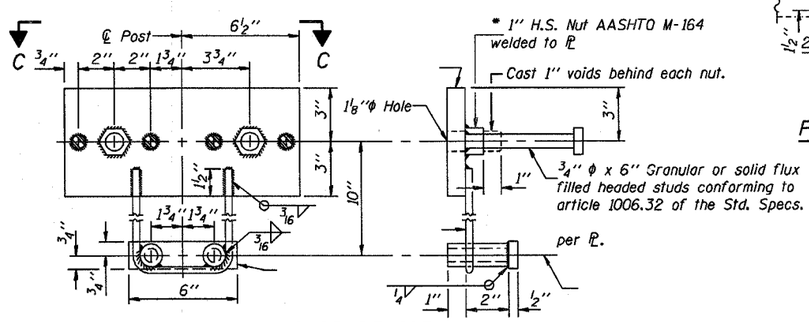

ANCHOR DEVICE

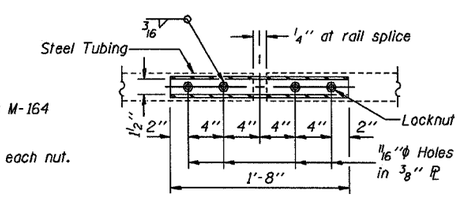

PLAN-BOTT. SPLICE R TYPICAL

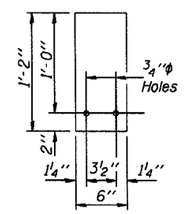

1/4" SHIM PLATE

STANDARD CR-TS1