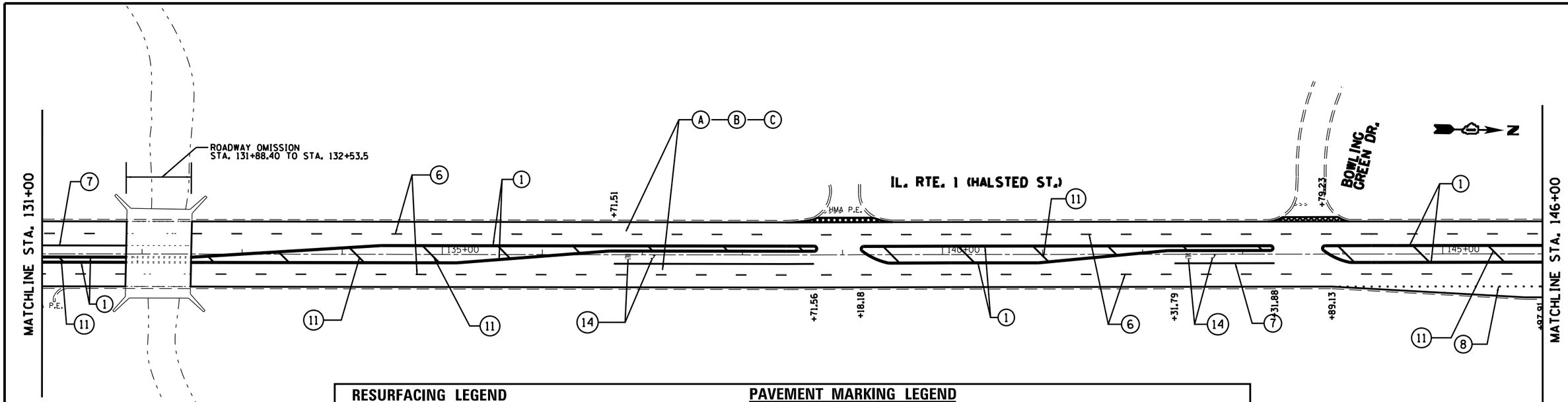

RESURFACING LEGEND

MAINLINE REMOVAL

(A) PROPOSED HOT-MIX ASPHALT REMOVAL, 2½"

MAINLINE PAVEMENT RESURFACING

(B) PROP. POLY. LEVELING BINDER (MACHINE METHOD), IL-4.75, ¾"

(C) PROP. POLY. HOT-MIX ASPHALT SURFACE COURSE, MIX "F", N90, 1¾"

PARKING LANE RESURFACING

(D) PROP. POLY. HOT-MIX ASPHALT REMOVAL, 1¾""

(E) PROP. POLY. HOT-MIX ASPHALT SURFACE COURSE, MIX "F", N90, 1¾"

PROP. HMA SURFACE REMOVAL-BUTT JOINT
SEE BUTT JOINT AND HMA TAPER DETAILS (BD-32) (TYP.)

PAVEMENT MARKING LEGEND

1. THPL PAVT MK, 4" DOUBLE YELLOW LINE, 11" C-C (TYP.)
2. THPL PAVT MK, 4" YELLOW SKIP DASH & SOLID LINE, 5 1/2" C-C (TYP.)
3. THPL PAVT MK, 4" YELLOW LINE (TYP.)
4. THPL PAVT MK, 4" WHITE EDGE LINE (TYP.)
5. THPL PAVT MK, 4" WHITE PARKING LINE (TYP.)
6. THPL PAVT MK, 4" WHITE LANE LINE (30' SKIP 10' DASH) (TYP.)
7. THPL PAVT MK, 6" WHITE LINE (TYP.)
8. THPL PAVT MK, 6" WHITE DOTTED LINE (6' SKIP 2' DASH) (TYP.)
9. THPL PAVT MK, 8" WHITE LINE (TYP.)
10. THPL PAVT MK, 12" DIAGONAL WHITE LINE (TYP.)
11. THPL PAVT MK, 12" DIAGONAL YELLOW LINE, 75' C-C (TYP.)
12. THPL PAVT MK, 12" DIAGONAL WHITE LINE, 20' C-C (TYP.)
13. THPL PAVT MK, 24" WHITE STOP BAR (TYP.)
14. THPL PAVT MK, LETTERS & SYMBOLS (TYP.)

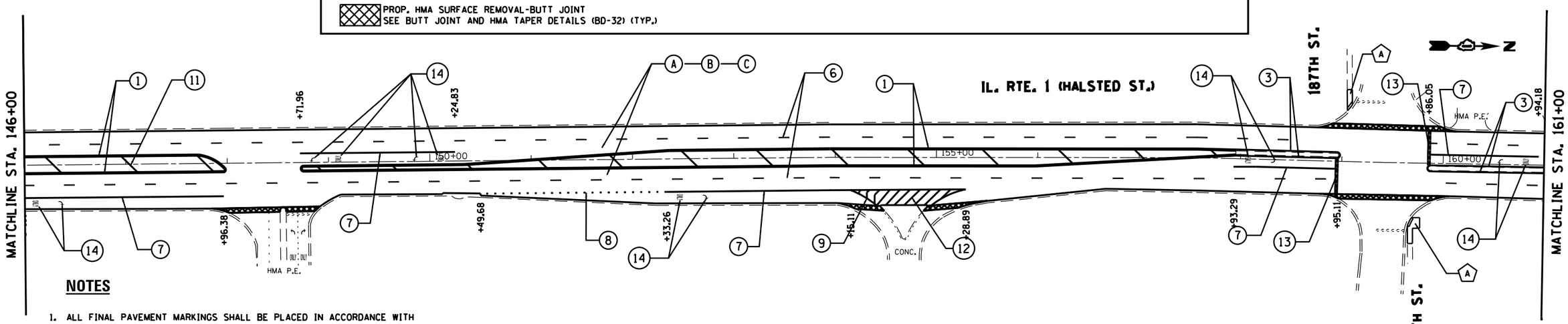

NOTES

1. ALL FINAL PAVEMENT MARKINGS SHALL BE PLACED IN ACCORDANCE WITH DISTRICT ONE TYPICAL PAVEMENT MARKINGS (TC-13) DETAIL.
2. ALL FINAL RAISED REFLECTIVE PAVEMENT MARKERS SHALL BE PLACED IN ACCORDANCE WITH THE DISTRICT ONE RAISED REFLECTIVE PAVEMENT MARKERS (TC-11) DETAIL.
3. PROPOSED THERMOPLASTIC PAVEMENT MARKING, 4" WHITE EDGE LINE SHALL BE USED ONLY ALONG IL RTE. 1 CUTOFF AS PRESENT IN EXISTING CONDITIONS.

(A) PROP. SIDEWALK REMOVAL
PROP. PCC SIDEWALK
PROP. DETECTABLE WARNING

FILE NAME = c:\pw_work\pwidot\mairenade\d0238722\D106311-sht-plan2.dgn	USER NAME = mairenade	DESIGNED -	REVISED -
		DRAWN -	REVISED -
	PLOT SCALE = 100.0000 ' / in.	CHECKED -	REVISED -
Default	PLOT DATE = 5/30/2014	DATE -	REVISED -

STATE OF ILLINOIS
DEPARTMENT OF TRANSPORTATION

IL. RTE. 1 (CHICAGO RD TO STRIEFF LN)
ROADWAY PLANS

SCALE: | SHEET OF SHEETS | STA. 131+00 TO STA. 161+00

F.A.P RTE.	SECTION	COUNTY	TOTAL SHEETS	SHEET NO.
876	2010-095-RS	COOK	30	12

CONTRACT NO. 60L96

ILLINOIS FED. AID PROJECT