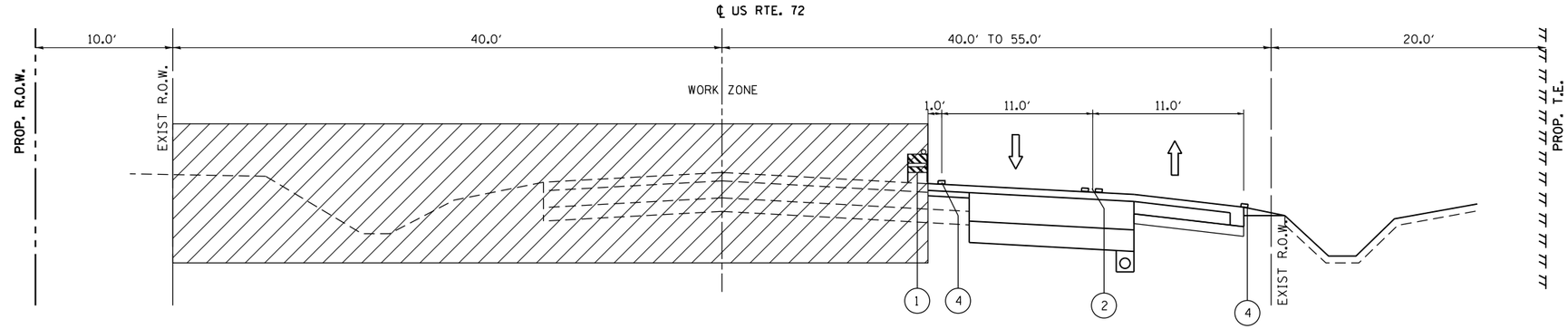

M.O.T. TYPICAL SECTION – STAGE 3
U.S. ROUTE 72

STA. 59+60 TO STA. 70+00
(LOOKING EAST)

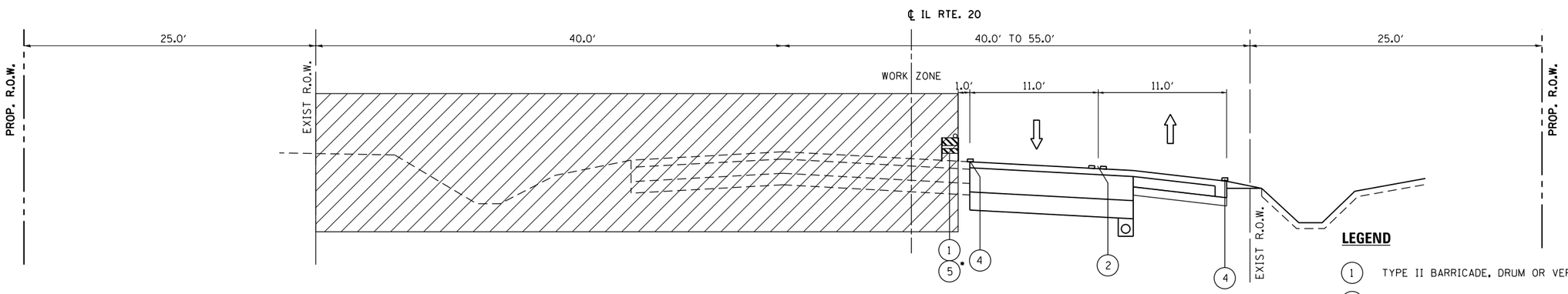

M.O.T. TYPICAL SECTION – STAGE 3
IL ROUTE 20

STA. 70+00 TO STA. 81+00
(LOOKING WEST)

* TEMPORARY CONCRETE BARRIER LOCATED BETWEEN STA. 74+00 TO 76+00

LEGEND

1. TYPE II BARRICADE, DRUM OR VERTICAL BARRICADE
2. TEMPORARY PAVEMENT MARKING - LINE 4" (YELLOW)
3. TEMPORARY PAVEMENT MARKING - LINE 6" (WHITE)
4. TEMPORARY PAVEMENT MARKING - LINE 4" (WHITE)
5. TEMPORARY CONCRETE BARRIER

DIRECTION OF TRAFFIC

WORK ZONE

NOTES

1. PRIOR TO INSTALLING POST MOUNTED SIGNS, THE CONTRACTOR SHALL CONTACT J.U.L.I.E.
2. SEE STAGING PLAN AND STANDARD 701326 FOR ADDITIONAL INFORMATION.
3. THE LEFT-TURN LANES ON IL-72 AT THE INTERSECTION OF WITH US-20/IL-47/IL-72 WILL HAVE TO BE STAGED SEPARATELY IN ORDER TO PROVIDE LEFT-TURN MOVEMENT.