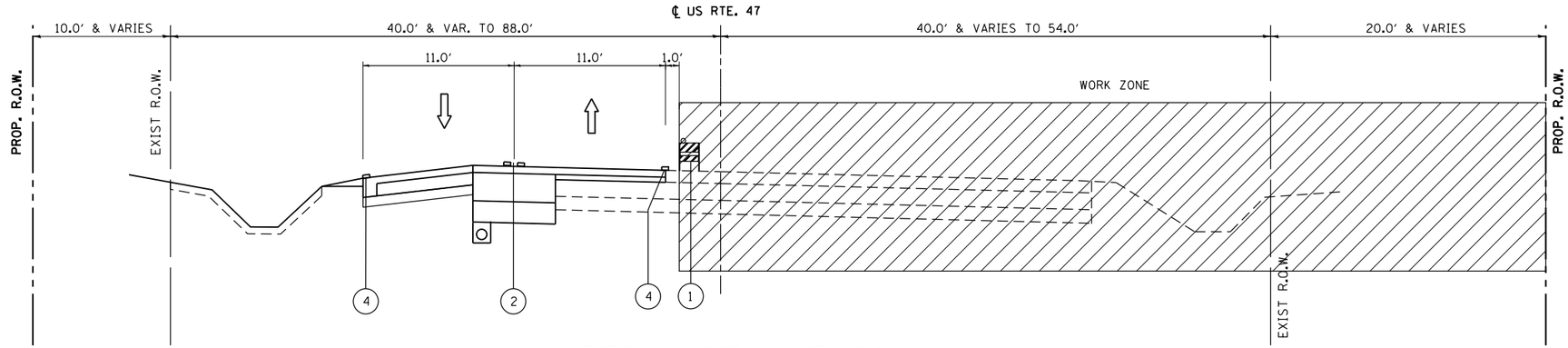

M.O.T. TYPICAL SECTION – STAGE 2
IL ROUTE 47

STA. 110+70 TO STA. 120+00
(LOOKING NORTH)

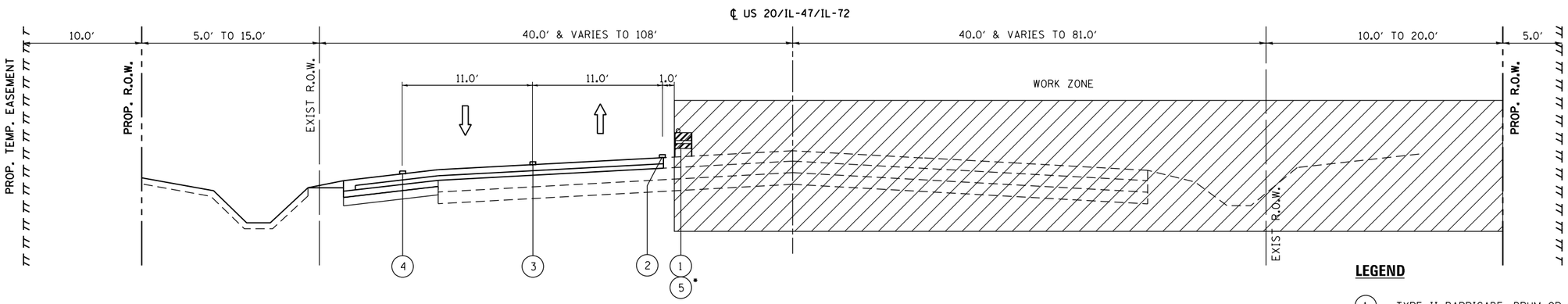

M.O.T. TYPICAL SECTION – STAGE 2
U.S. ROUTE 20 /IL ROUTE 47 /IL ROUTE 72

STA. 120+00 TO STA. 129+00
(LOOKING NORTH)
*TEMPORARY CONCRETE BARRIER LOCATED
BETWEEN STA. 127+00 TO 129+00

LEGEND

1. TYPE II BARRICADE, DRUM OR VERTICAL BARRICADE
2. TEMPORARY PAVEMENT MARKING - LINE 4″ (YELLOW)
3. TEMPORARY PAVEMENT MARKING - LINE 6″ (WHITE)
4. TEMPORARY PAVEMENT MARKING - LINE 4″ (WHITE)
5. TEMPORARY CONCRETE BARRIER

DIRECTION OF TRAFFIC

WORK ZONE

NOTES

1. PRIOR TO INSTALLING POST MOUNTED SIGNS, THE CONTRACTOR SHALL CONTACT J.U.L.I.E.
2. SEE STAGING PLAN AND STANDARD 701422 FOR ADDITIONAL INFORMATION.

FILE NAME =	USER NAME = chrisfish	DESIGNED - MTM	REVISED -	STATE OF ILLINOIS DEPARTMENT OF TRANSPORTATION	SUGGESTED MAINTENANCE OF TRAFFIC STAGE 3 TYPICAL SECTION – SOUTH JUNCTION	F.A.P. RTE.	SECTION	COUNTY	TOTAL SHEETS	SHEET NO.
		DRAWN - MTM	REVISED -			345	106-S-N-2	KANE	147	37
	PLOT SCALE = 10.0000 ′ / in.	CHECKED - BA	REVISED -					CONTRACT NO. 60T09		
Default	PLOT DATE = 4/1/2014	DATE - 3/31/14	REVISED -		SCALE: N.T.S. SHEET 6 OF 7 SHEETS STA. TO STA.		ILLINOIS FED. AID PROJECT			