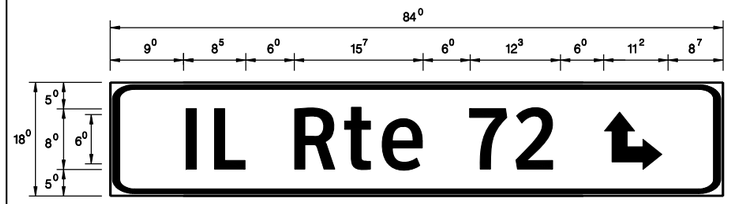

- Sq. M. each

10.50 Sq. Ft. each

1 Required

Design Series D

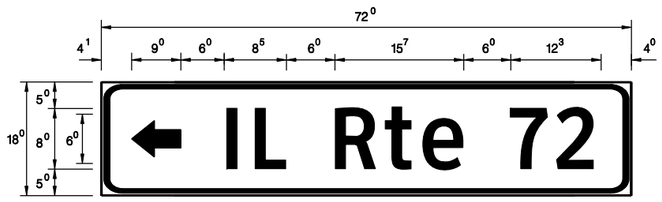

- Sq. M. each

9 Sq. Ft. each

1 Required

Design Series D

SUPPORTING CHANNELS

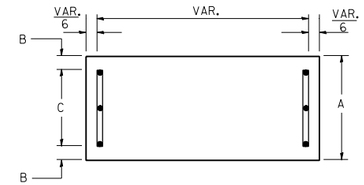

A	B	C
18"	2"	14"

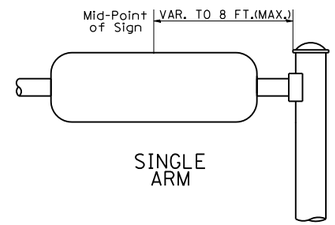

SINGLE ARM

SUPPORTING CHANNELS

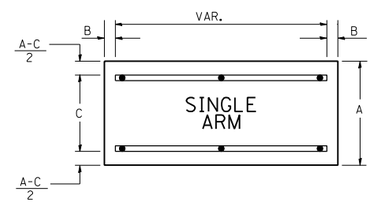

A	B	C
18"	2"	12"
30"	2"	22"

NOTE: SIGN DIMENSIONS ARE IN ENGLISH UNITS

GENERAL NOTES

1. WHERE MAST ARM MOUNTED STREET NAME SIGNS ARE SPECIFIED, THE MAST ARM ASSEMBLY AND POLES SHALL BE DESIGNED TO SUPPORT THE LOADINGS CALLED FOR ON STANDARDS 877001, 877002, 877006, 877011 AND 877012, AS APPLICABLE, PLUS TWO (2) SIGN PANELS 2'-6" x 8'-0" MOUNTED AS SHOWN. THE DESIGN SHALL BE IN ACCORDANCE WITH THE REQUIREMENTS OF THE CURRENT "STANDARD SPECIFICATIONS FOR STRUCTURAL SUPPORTS FOR HIGHWAY SIGNS, LUMINAIRES, AND TRAFFIC SIGNALS" AS PUBLISHED BY THE AMERICAN ASSOCIATION OF STATE HIGHWAY AND TRANSPORTATION OFFICIALS FOR 80 M.P.H. WIND VELOCITY.
2. ALL SIGNS SHALL HAVE A WHITE REFLECTORIZED LEGEND AND BORDER ON A GREEN REFLECTORIZED BACKGROUND, TYPE A SHEETING.
3. THE SIGN LENGTH SHOULD BE INCREASED IN 6-INCH INCREMENTS, BUT THE OVERALL LENGTH SHOULD NOT EXCEED 8'-0".
4. ALL BORDERS SHALL BE ¾" WIDE AND CORNER RADIUS SHALL BE 2-1/4 ".
5. SIGNFIX ALUMINUM CHANNEL FRAMING SYSTEM SHALL BE USED FOR ALL SIGNS ATTACHED TO SIGNAL POLES AND POSTS. LOCAL SUPPLIERS OF THE SIGNFIX ALUMINUM CHANNEL FRAMING SYSTEM ARE:

* J.O. HERBERT CO.
  MIDLOTHIAN, VA.
* WESTERN REMAC INC.
  WOODRIDGE, IL.

PARTS LISTING:

SIGN CHANNEL	PART #HPN053 (MED. CHANNEL)
SIGN SCREWS	¼" x 14 x 1" H.W.H. #3 SELF TAPPING WITH NEOPRENE WASHER
BRACKETS	PART #HPN034 (UNIVERSAL) CHANNEL CLAMPS WITH STAINLESS STEEL STRAPPING

OTHER BRANDS OF MOUNTING HARDWARE ARE ACCEPTABLE, BASED UPON THE DEPARTMENT'S APPROVAL AND COMPATIBILITY WITH THE CHANNEL/BRACKET OF THE ABOVE PRODUCT.

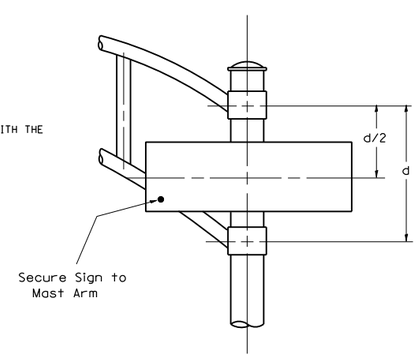

DUAL ARM

SIGNFIX ALUMINUM CHANNEL FRAMING SYSTEM

Shall be used. See Note #5.

Upper Case To Lower Case

Spacing Chart 8-6 Inch Series "C & D"

EXAMPLE, 2 (3) DENOTES 3"/8

FIRST LETTER	SECOND LETTER: a c d e g o q		b h i k l m n p r u		f w		j		s t		v y		x		z	
SERIES	C	D	C	D	C	D	C	D	C	D	C	D	C	D	C	D
A W X	1 2	1 4	1 4	1 5	1 2	1 4	0 6	1 0	1 1	1 4	0 6	1 0	1 1	1 2	1 2	1 4
B	1 4	1 5	2 0	2 1	1 4	1 5	1 1	1 2	1 4	1 5	1 2	1 4	1 2	1 4	1 6	1 7
C E G	1 4	1 5	2 0	2 1	1 2	1 4	0 6	1 0	1 2	1 4	1 2	1 4	1 4	1 5	1 4	1 5
D O Q R	1 4	1 5	2 0	2 1	1 4	1 5	0 6	1 0	1 2	1 4	1 2	1 4	1 4	1 5	1 4	1 5
F	0 5	0 6	1 4	1 5	0 6	1 0	0 5	0 6	0 6	1 0	0 6	1 0	0 6	1 0	1 1	1 2
H I M N	2 0	2 1	2 2	2 4	2 0	2 1	1 4	1 5	1 6	1 7	1 6	1 7	2 0	2 1	2 0	2 1
J U	2 0	2 1	2 0	2 1	1 6	1 7	1 4	1 5	1 6	1 7	1 6	1 7	1 6	1 7	2 0	2 1
K L	1 1	1 2	1 6	1 7	1 1	1 2	0 5	0 6	1 1	1 2	1 1	1 2	1 1	1 2	1 2	1 4
P	1 2	1 4	1 4	1 5	1 2	1 4	0 5	0 6	1 1	1 2	1 1	1 2	1 2	1 4	1 2	1 4
S	1 2	1 4	1 6	1 7	1 2	1 4	0 6	1 0	1 2	1 4	1 2	1 4	1 2	1 4	1 2	1 4
T	1 1	1 2	1 6	1 7	0 6	1 0	0 6	1 0	1 1	1 2	1 1	1 2	1 1	1 2	1 2	1 4
V	0 6	1 0	1 4	1 5	1 1	1 2	0 6	1 0	1 2	1 4	1 2	1 4	1 2	1 4	1 2	1 4
Y	0 5	0 6	1 4	1 5	0 6	1 0	0 5	0 6	0 5	0 7	0 5	0 6	0 6	1 0	1 1	1 2
Z	1 6	1 7	2 2	2 4	1 6	1 7	1 2	1 4	1 6	1 7	1 6	1 7	1 6	1 7	2 0	2 1

Lower Case To Lower Case

Spacing Chart 6 Inch Series "C & D"

FIRST LETTER	SECOND LETTER: a c d e g o q		b h i k l m n p r u		f w		j		s t		v y		x		z	
SERIES	C	D	C	D	C	D	C	D	C	D	C	D	C	D	C	D
a d h g i j l m n q u	1 6	1 7	2 2	2 4	1 6	1 7	1 2	1 4	1 4	1 5	1 4	1 5	1 6	1 7	1 6	1 7
b f k o p s	1 2	1 4	1 6	1 7	1 1	1 2	0 5	0 6	1 1	1 2	1 1	1 2	1 2	1 4	1 2	1 4
c e	1 2	1 4	1 6	1 7	1 2	1 4	0 6	1 0	1 2	1 4	1 2	1 4	1 2	1 4	1 2	1 4
r	0 6	1 0	1 2	1 4	0 6	1 0	0 3	0 3	0 5	0 6	0 5	0 6	0 6	1 0	0 6	1 0
t z	1 2	1 4	1 6	1 7	1 2	1 4	0 6	1 0	1 1	1 2	1 1	1 2	1 2	1 4	1 2	1 4
v y	1 1	1 2	1 4	1 5	1 1	1 2	0 5	0 6	0 6	1 0	0 6	1 0	1 1	1 2	1 1	1 2
w	1 1	1 2	1 4	1 5	1 1	1 2	0 5	0 6	1 1	1 2	1 1	1 2	1 1	1 2	1 2	1 4
x	1 2	1 4	1 6	1 7	1 1	1 2	0 5	0 6	1 1	1 2	1 1	1 2	1 1	1 2	1 2	1 4

Number To Number

Spacing Chart 8 Inch Series "C & D"

FIRST NUMBER	SECOND NUMBER: 0		1		2		3		4		5		6		7		8		9	
SERIES	C	D	C	D	C	D	C	D	C	D	C	D	C	D	C	D	C	D	C	D
0 9	1 6	1 7	1 6	1 7	1 4	1 5	1 2	1 4	1 4	1 5	1 4	1 5	1 6	1 7	1 2	1 4	1 6	1 7	1 6	1 7
1	2 0	2 1	2 0	2 1	2 0	2 1	1 6	1 7	1 4	1 5	2 0	2 1	2 0	2 1	1 4	1 5	2 0	2 1	2 0	2 1
2 3 4	1 4	1 5	1 4	1 5	1 4	1 5	1 2	1 4	1 2	1 4	1 4	1 5	1 4	1 5	1 1	1 2	1 6	1 7	1 4	1 5
5	1 4	1 5	1 4	1 5	1 4	1 5	1 1	1 2	1 1	1 2	1 4	1 5	1 4	1 5	1 1	1 2	1 4	1 5	1 4	1 5
6	1 6	1 7	1 4	1 5	1 4	1 5	1 2	1 5	1 2	1 4	1 4	1 5	1 4	1 5	1 1	1 2	1 4	1 5	1 4	1 5
7	1 2	1 4	1 2	1 4	1 4	1 5	1 2	1 5	0 5	0 6	1 2	1 4	1 4	1 5	1 1	1 2	1 4	1 5	1 2	1 4
8	1 6	1 7	1 6	1 7	1 4	1 5	1 2	1 5	1 2	1 4	1 4	1 5	1 6	1 7	1 2	1 4	1 6	1 7	1 4	1 5

UPPER AND LOWER CASE LETTER WIDTHS

LETTERS	6 INCH UPPER CASE LETTERS SERIES C	6 INCH UPPER CASE LETTERS SERIES D	8 INCH UPPER CASE LETTERS SERIES C	8 INCH UPPER CASE LETTERS SERIES D	LETTERS	6 INCH LOWER CASE LETTERS SERIES C	6 INCH LOWER CASE LETTERS SERIES D
A	3 6	5 0	5 0	6 5	a	3 5	4 2
B	3 2	4 0	4 3	5 3	b	3 5	4 2
C	3 2	4 0	4 3	5 3	c	3 5	4 1
D	3 2	4 0	4 3	5 3	d	3 5	4 2
E	3 0	3 5	4 0	4 7	e	3 5	4 2
F	3 0	3 5	4 0	4 7	f	2 3	2 6
G	3 2	4 0	4 3	5 3	g	3 5	4 2
H	3 2	4 0	4 3	5 3	h	3 5	4 2
I	0 7	0 7	1 1	1 2	i	1 1	1 1
J	3 0	3 6	4 0	5 0	j	2 0	2 2
K	3 2	4 1	4 3	5 4	k	3 5	4 2
L	3 0	3 5	4 0	4 7	l	1 1	1 1
M	3 7	4 5	5 1	6 1	m	6 0	7 0
N	3 2	4 0	4 3	5 3	n	3 5	4 2
O	3 4	4 2	4 5	5 5	o	3 6	4 3
P	3 2	4 0	4 3	5 3	p	3 5	4 2
Q	3 4	4 2	4 5	5 5	q	3 5	4 2
R	3 2	4 0	4 3	5 3	r	2 6	3 2
S	3 2	4 0	4 3	5 3	s	3 6	4 2
T	3 0	3 5	4 0	4 7	t	2 7	3 2
U	3 2	4 0	4 3	5 3	u	3 5	4 2
V	3 5	4 4	4 7	6 0	v	4 2	4 7
W	4 4	5 2	6 0	7 0	w	5 5	6 4
X	3 4	4 0	4 5	5 3	x	4 4	5 1
Y	3 6	5 0	5 0	6 6	y	4 6	5 3
Z	3 2	4 0	4 3	5 3	z	3 6	4 3

NUMBER	6 INCH SERIES C	6 INCH SERIES D	8 INCH SERIES C	8 INCH SERIES D
1	1 2	1 4	1 5	2 0
2	3 2	4 0	4 3	5 3
3	3 2	4 0	4 3	5 3
4	3 5	4 3	4 7	5 7
5	3 2	4 0	4 3	5 3
6	3 2	4 0	4 3	5 3
7	3 2	4 0	4 3	5 3
8	3 2	4 0	4 3	5 3
9	3 2	4 0	4 3	5 3
0	3 4	4 2	4 5	5 5