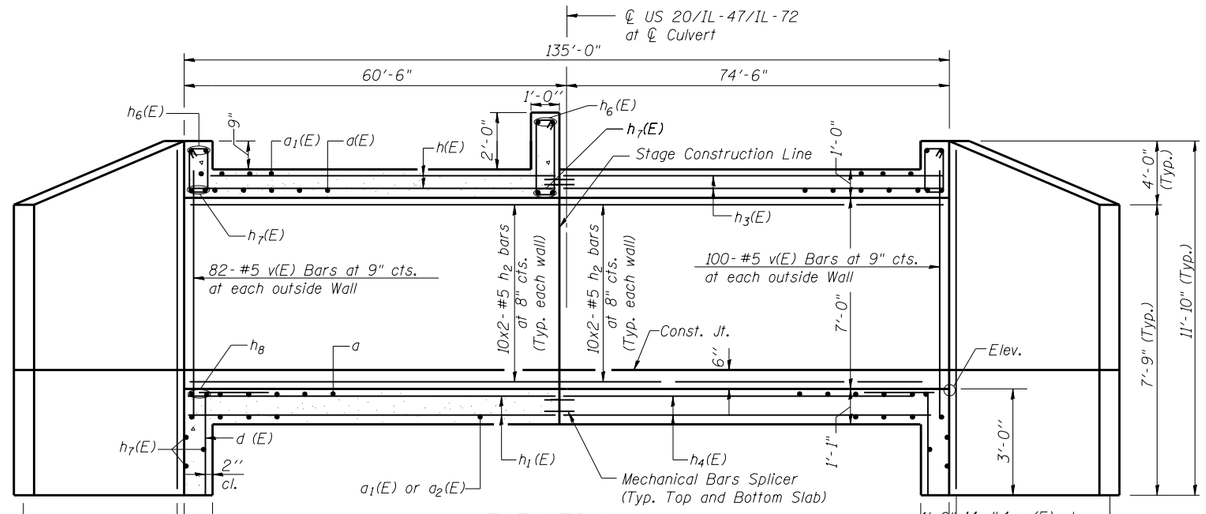

ELEVATION

(Showing Bars at Outside Walls and Wingwalls)

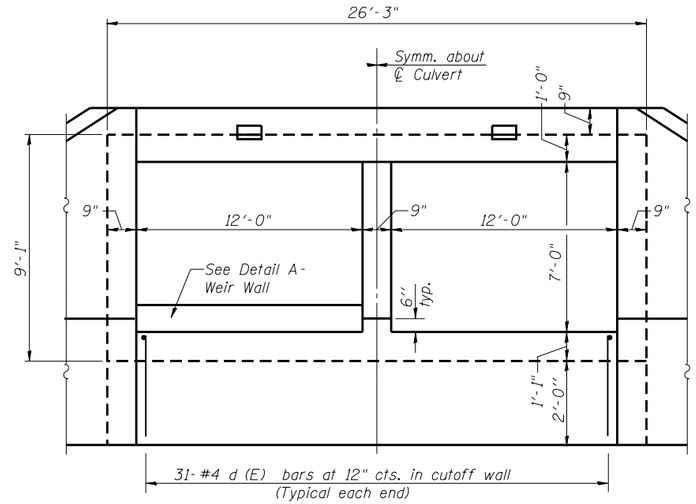

END ELEVATION

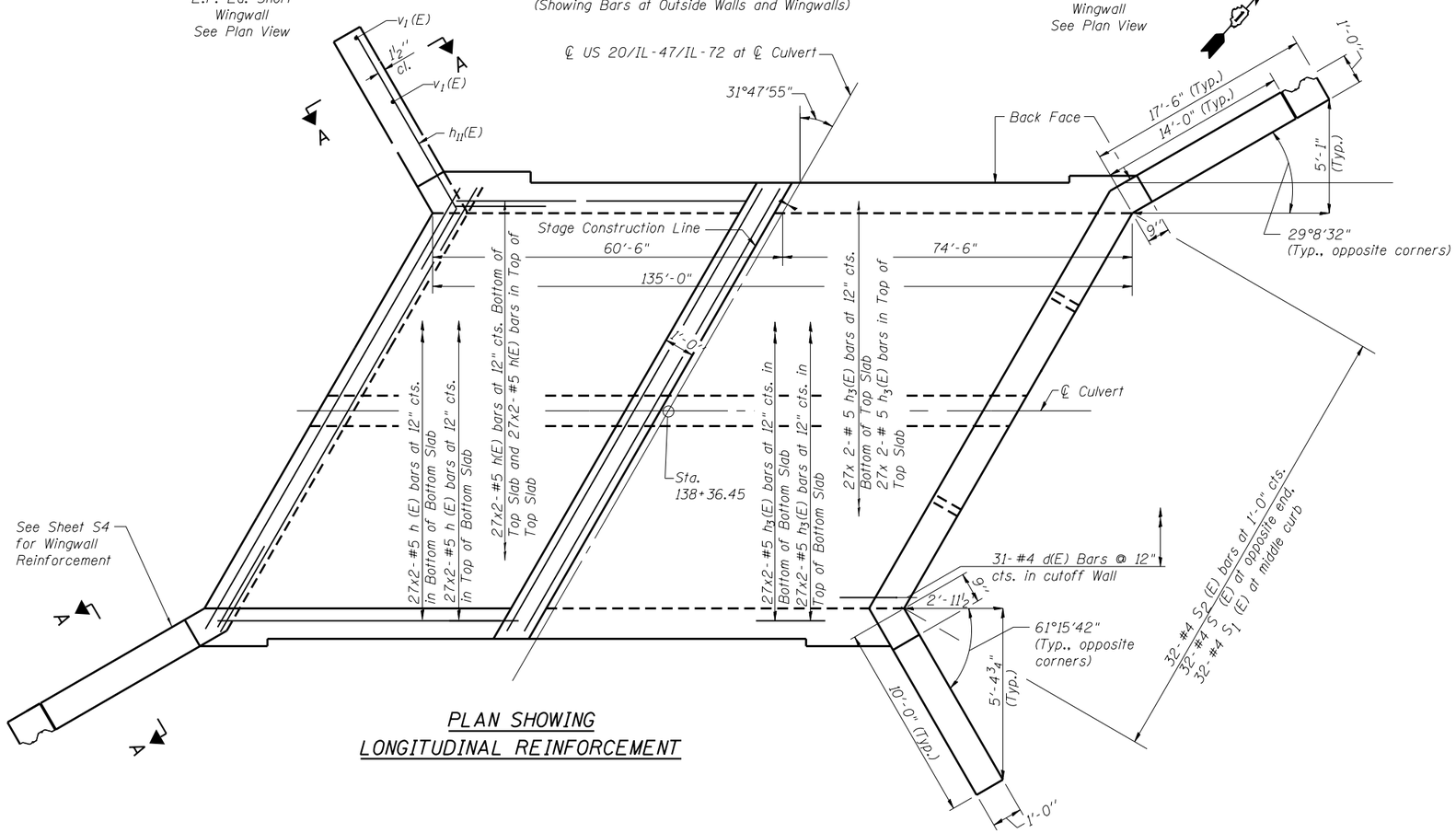

PLAN SHOWING LONGITUDINAL REINFORCEMENT

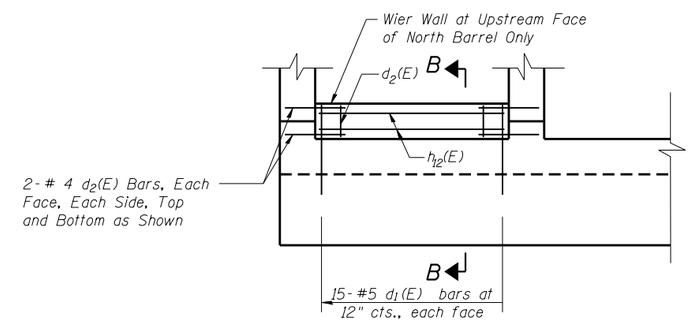

DETAIL A - WIER WALL

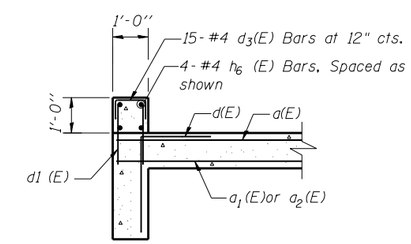

SECTION B-B

Notes:
- See Sheet S1 for Bill of Materials
- See Sheet S2 for Notes
- Work this Sheet with Sheet S4
- See Sheet S6 for Bill of Material

MINIMUM BAR LAPS

#4 Bar = 2'-7"
#5 Bar = 3'-3"
#6 Bar = 3'-10"
#7 Bar = 5'-2"

PLOT DATE = $DATE$
FILE NAME = $FILEL$

USER NAME =	DESIGNED - MBC	REVISED -	
PLOT SCALE =	DRAWN - SSR	REVISED -	
PLOT DATE =	CHECKED - GFP	REVISED -	
FILE NAME =	DATE - 5/12/14	REVISED -	

DBS STERLIN CONSULTANTS, INC.
123 N. WACKER DRIVE SUITE 2000
CHICAGO, ILLINOIS 60606
TEL. (312)857-1008 FAX. (312)857-1056

STATE OF ILLINOIS
DEPARTMENT OF TRANSPORTATION

CULVERT PLAN, TOP SLAB, BOTTOM SLAB, ELEVATIONS AND DETAILS
STRUCTURE NO. 045-2040

SHEET NO. S5 OF S9 SHEETS

F.A.P. RTE.	SECTION	COUNTY	TOTAL SHEETS	SHEET NO.
345	106-S-N-1	KANE	167	108
		CONTRACT NO. 60T10		

FED. ROAD DIST. NO. 1 | ILLINOIS | FED. AID PROJECT