ROUTE NO.	SECTION	COUNTY	TOTAL SHEETS	SHEET NO.
F.A.I. 57	**	IROQUOIS	190	48
FED. ROAD DIST. NO.	ILLINOIS			

**(38-4)RS-2, (38-4)BR CONTRACT NO. 66757

Sheet 3 of 11 Sheets

STATE OF ILLINOIS
DEPARTMENT OF TRANSPORTATION

Notes:

All structural steel shall conform to AASHTO Classification M-270 Grade 36.

See Section 584 of the Standard Specifications for Epoxy Grouting.

All work and material associated with the placement of edge beams is included in the cost of Furnishing and Erecting Structural Steel.

Threaded rods shall conform with the requirements Article 1006.9 of the Standard Specifications.

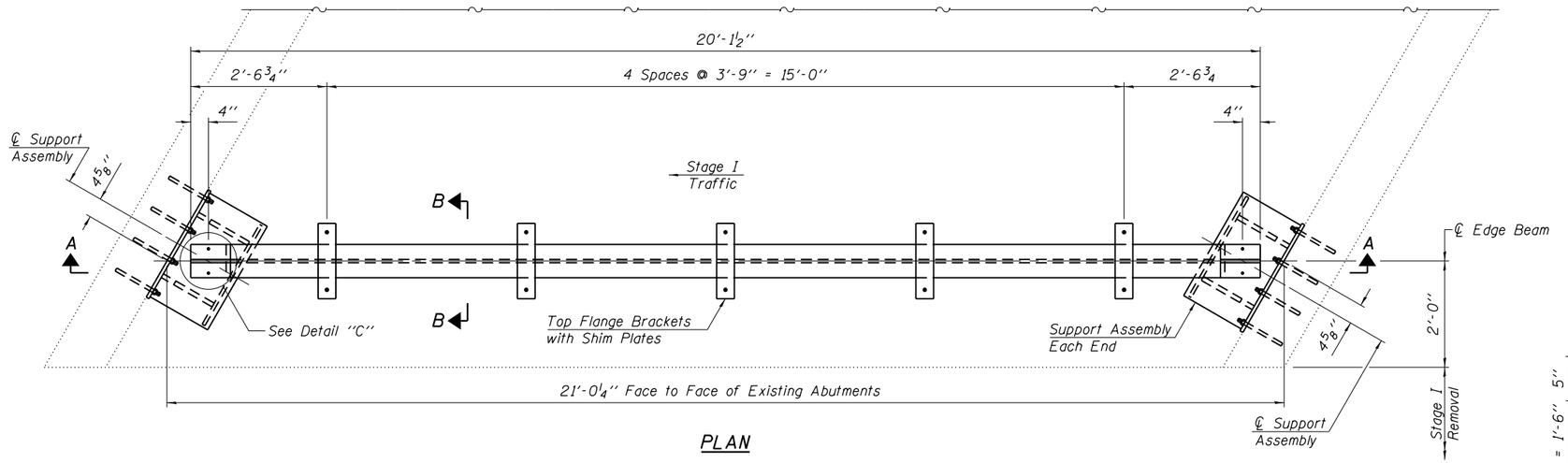

PLAN

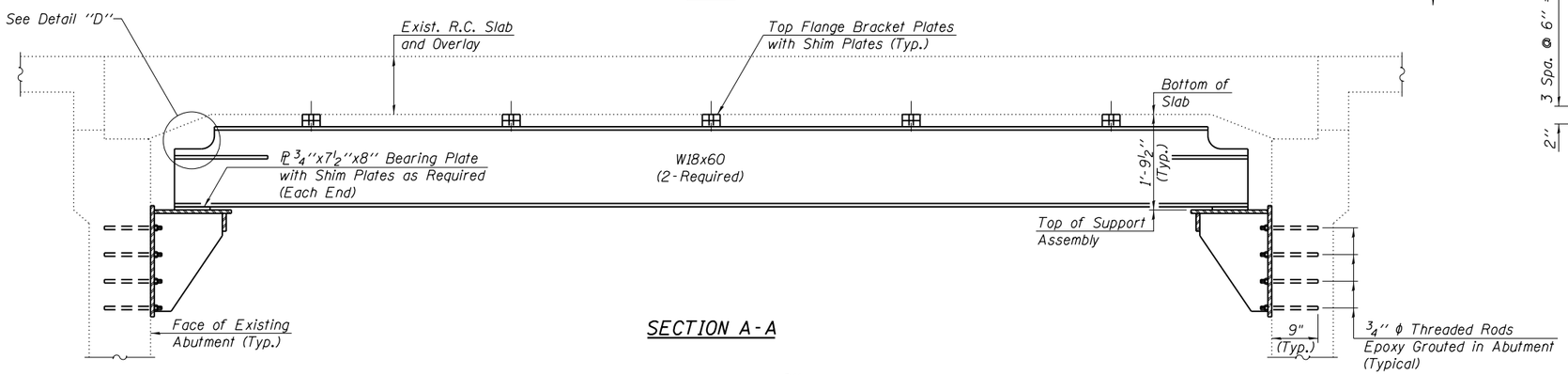

SECTION A-A

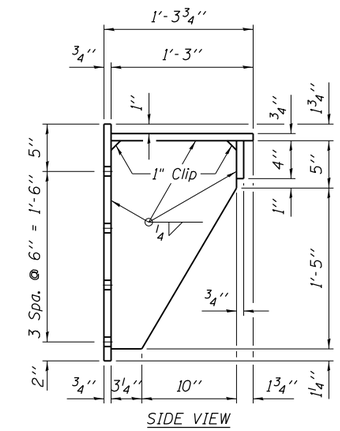

SIDE VIEW

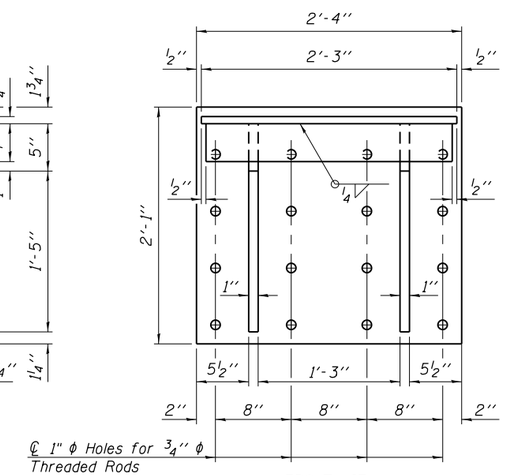

FRONT VIEW

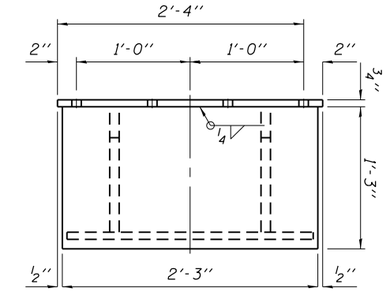

PLAN VIEW

SUPPORT ASSEMBLY DETAILS

(4-Required)

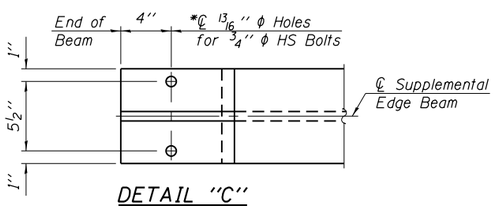

DETAIL "C"

*Note: 13/16" ϕ Holes in Support Assembly shall be drilled in field to match the location of holes in Beam Flange.

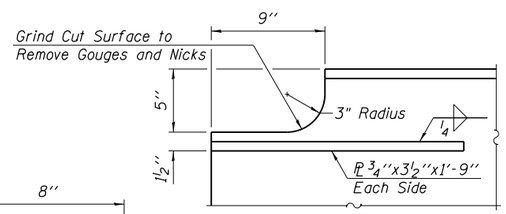

DETAIL "D"

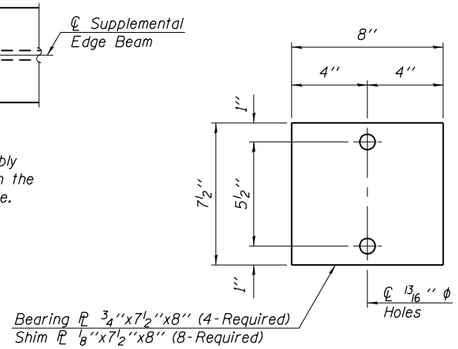

BEARING PLATE & BEARING SHIM PLAN

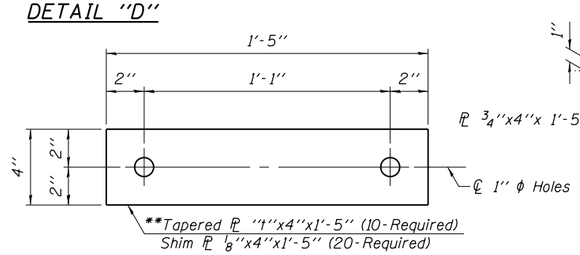

TOP FLANGE BRACKET TAPERED & SHIM PLATES PLAN

**See Section B-B for Tapered Plate Thickness "t".

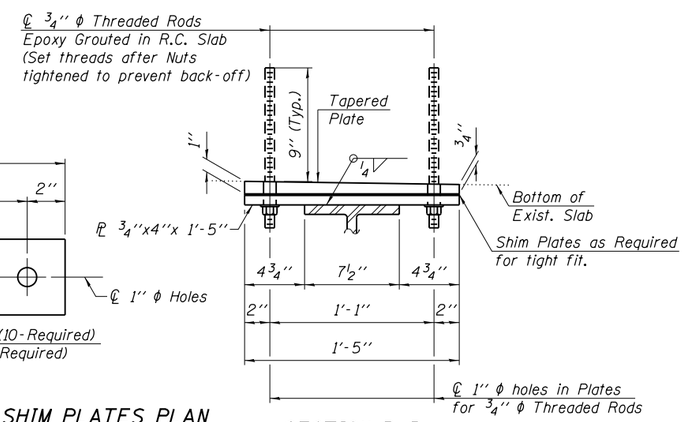

SECTION B-B

DESIGNED -	J.A.M.
CHECKED -	S.F.M. & A.R.K.
DRAWN -	S.A.P.
CHECKED -	A.R.K. & J.A.M.

EDGE BEAM DETAILS
I-57 OVER
DANFORTH TOWNSHIP DRAINAGE DITCH
F.A.I. ROUTE 57
SECTION (38-4)RS-2, (38-4)BR
IROQUOIS COUNTY
STATION 348+54.50
S.N. 038-2021

4440 ASH GROVE
SPRINGFIELD, IL. 62711
(217) 793-8600
www.fehr-graham.com

FEHR-GRAHAM & ASSOCIATES, LLC
ENGINEERING AND SCIENCE CONSULTANTS
FREEPORT, IL ROCKFORD, IL ROCHELLE, IL MONROE, WI SPRINGFIELD, IL

JOB NO.:	468101
FILE:	SUP-BM.DGN
DATE:	11/11/08