EXISTING WETLAND SITE DETAILS

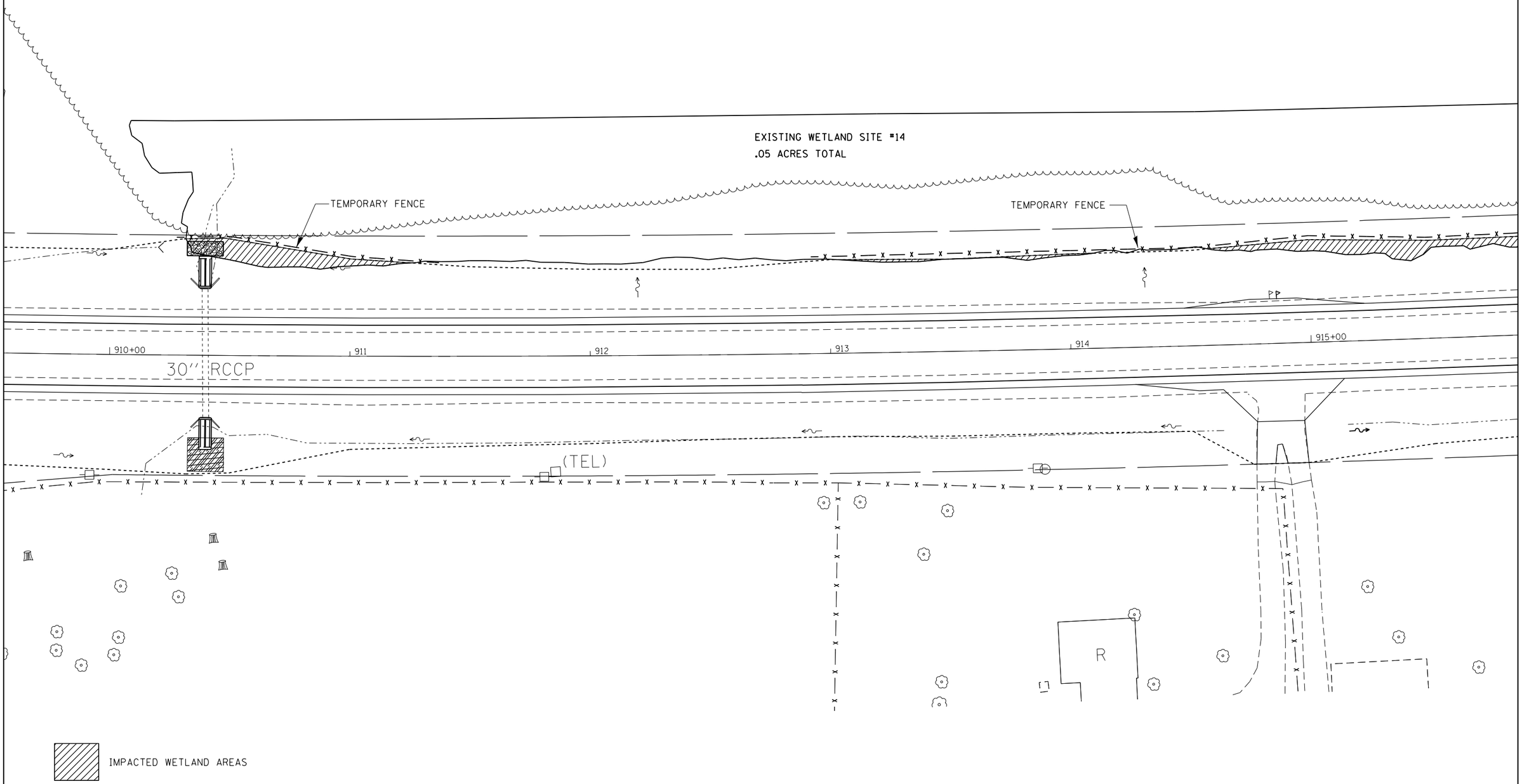

FILE NAME = c:\pw_work\pwidot\grantpm\d0261271\D207411-sht-wetlands.dgn	USER NAME = grantpm	DESIGNED -	REVISED -
		DRAWN -	REVISED -
	PLOT SCALE = 40.0000 ' / in.	CHECKED -	REVISED -
Default	PLOT DATE = Wed Mar 20 11:33:37 2013	DATE -	REVISED -

STATE OF ILLINOIS
DEPARTMENT OF TRANSPORTATION

EXISTING WETLAND SITE DETAILS

SCALE: | SHEET OF SHEETS | STA. TO STA.

F.A.P. RTE.	SECTION	COUNTY	TOTAL SHEETS	SHEET NO.
599	(83MFT & 103MFT)W	ROCK ISLAND	340	101

CONTRACT NO. 64H11

ILLINOIS FED. AID PROJECT

EXISTING WETLAND SITE DETAILS

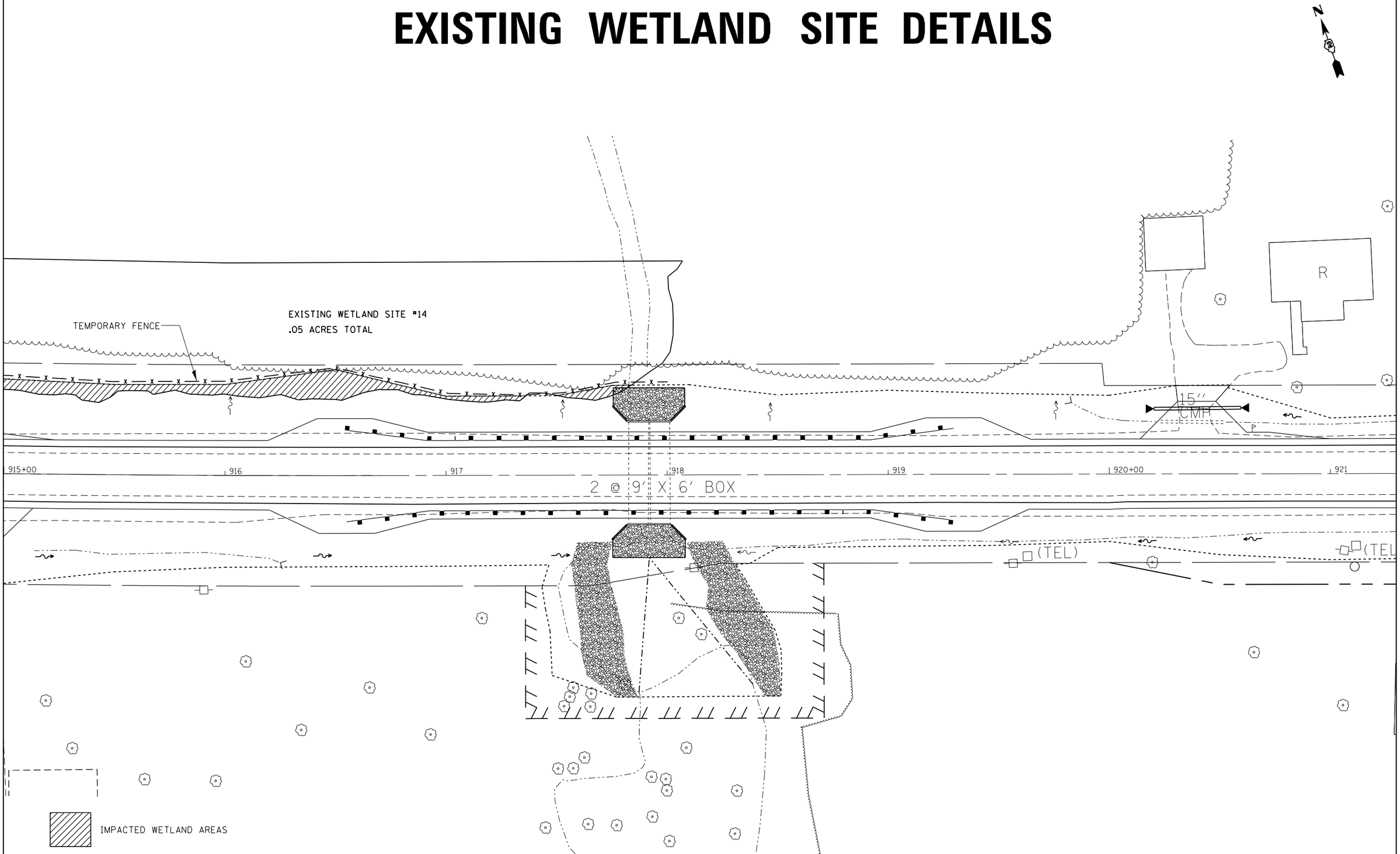

FILE NAME = c:\pw_work\pwidot\grantpm\d0261271\D207411-sht-wetlands.dgn	USER NAME = grantpm	DESIGNED -	REVISED -
		DRAWN -	REVISED -
	PLOT SCALE = 40.0000 ' / in.	CHECKED -	REVISED -
Default	PLOT DATE = Wed Mar 20 11:33:52 2013	DATE -	REVISED -

STATE OF ILLINOIS
DEPARTMENT OF TRANSPORTATION

EXISTING WETLAND SITE DETAILS

SCALE: | SHEET OF SHEETS | STA. TO STA.

F.A.P. RTE.	SECTION	COUNTY	TOTAL SHEETS	SHEET NO.
599	(83MFT & 103MFT)W	ROCK ISLAND	340	102

CONTRACT NO. 64H11

ILLINOIS FED. AID PROJECT

EXISTING WETLAND SITE DETAILS

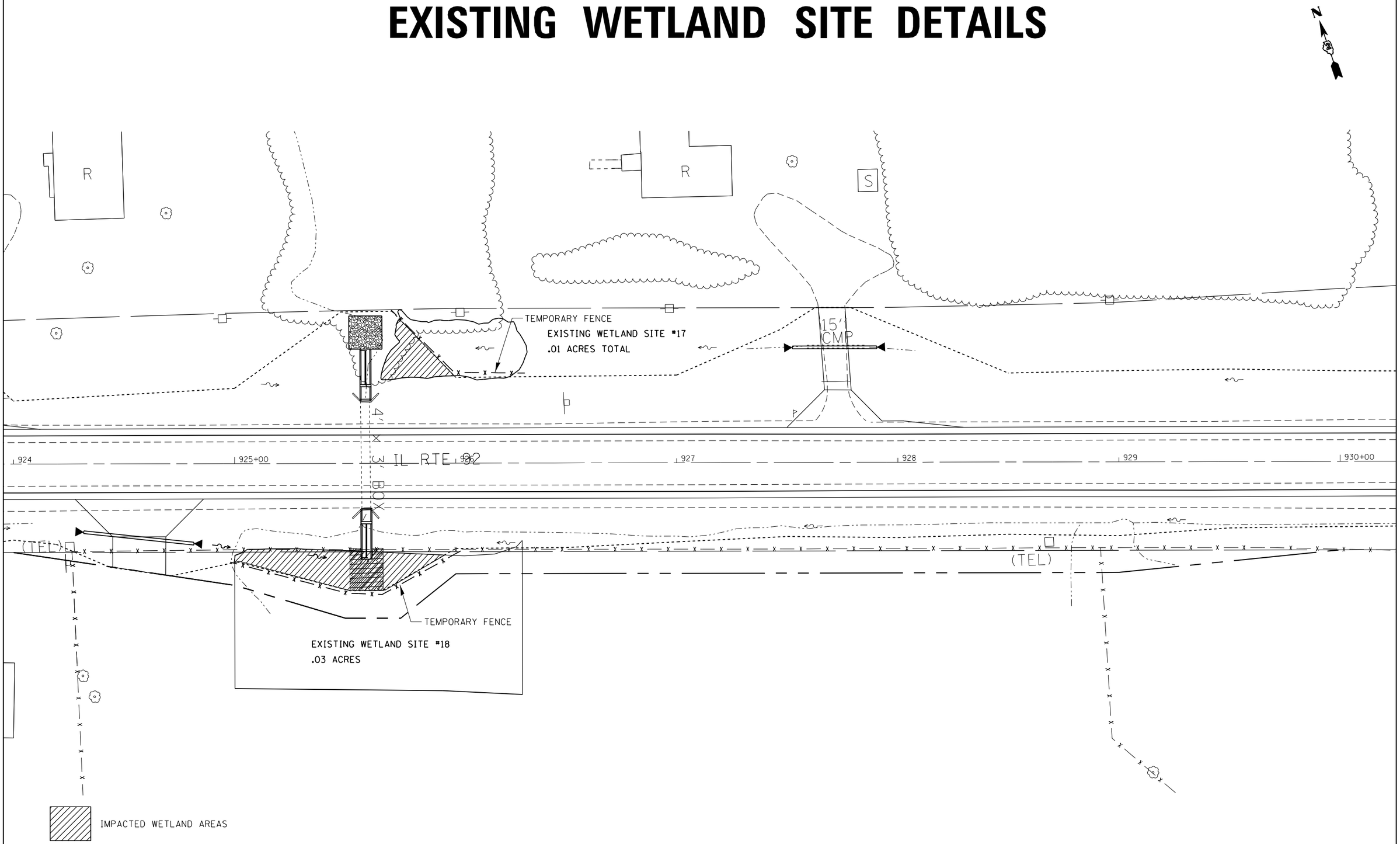

FILE NAME = c:\pw_work\pwidot\grantpm\d0261271\D207411-sht-wetlands.dgn	USER NAME = grantpm	DESIGNED -	REVISED -	STATE OF ILLINOIS DEPARTMENT OF TRANSPORTATION	EXISTING WETLAND SITE DETAILS	F.A.P. RTE.	SECTION	COUNTY	TOTAL SHEETS / SHEET NO.
	PLOT SCALE = 40.0000 ' / in.	DRAWN -	REVISED -			599	(83MFT & 103MFT)W	ROCK ISLAND	340 / 103
		CHECKED -	REVISED -					CONTRACT NO. 64H11	
Default	PLOT DATE = Wed Mar 20 11:34:06 2013	DATE -	REVISED -		SCALE: SHEET OF SHEETS STA. TO STA.		ILLINOIS FED. AID PROJECT		

EXISTING WETLAND SITE DETAILS

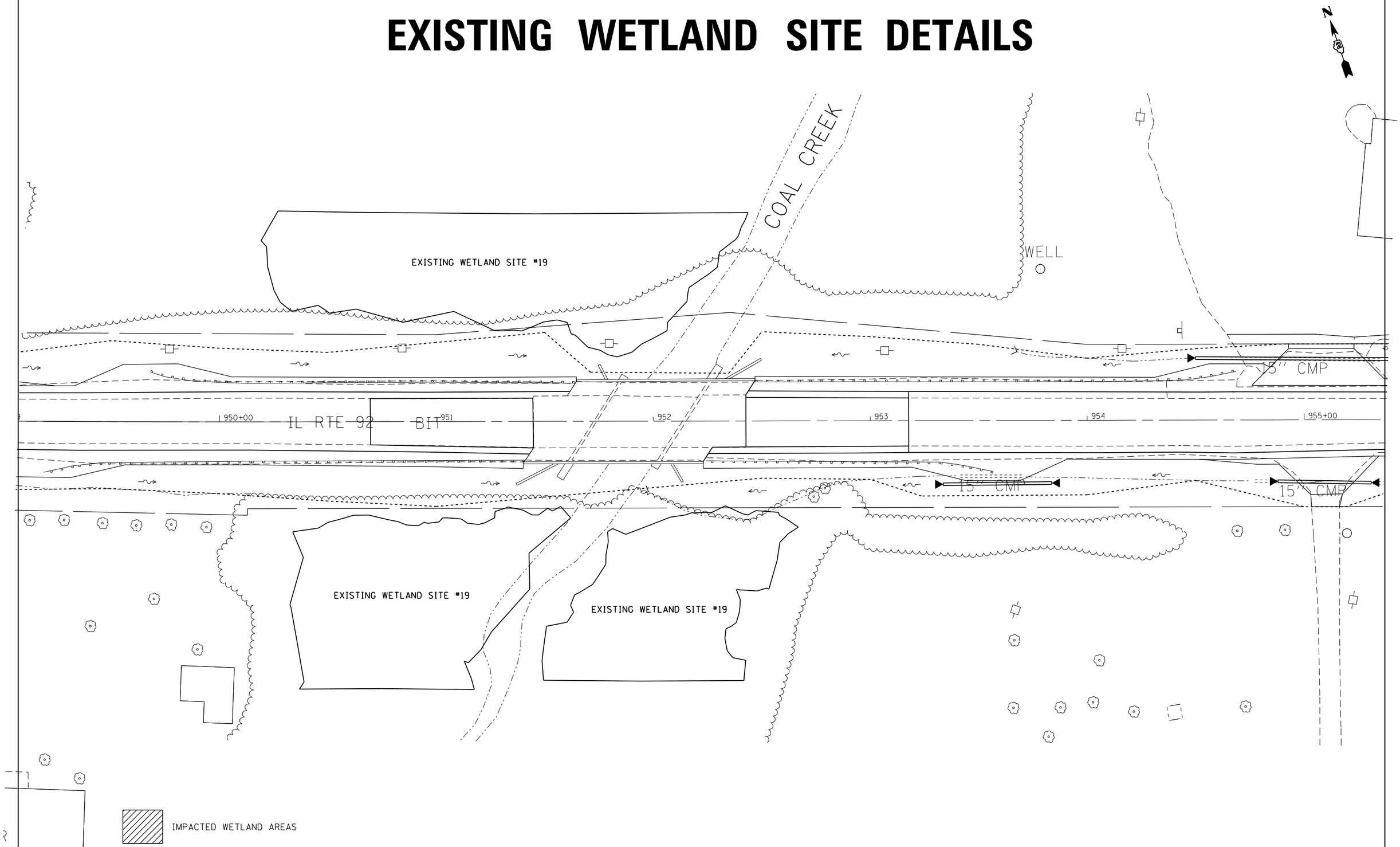

FILE NAME = c:\pw_work\pwidot\grantpm\d0261271\D207411-sht-wetlands.dgn	USER NAME = grantpm	DESIGNED -	REVISED -
		DRAWN -	REVISED -
	PLOT SCALE = 40.0000 ' / in.	CHECKED -	REVISED -
Default	PLOT DATE = Wed Mar 20 11:34:20 2013	DATE -	REVISED -

STATE OF ILLINOIS
DEPARTMENT OF TRANSPORTATION

EXISTING WETLAND SITE DETAILS

SCALE: | SHEET OF SHEETS | STA. TO STA.

F.A.P. RTE.	SECTION	COUNTY	TOTAL SHEETS	SHEET NO.
599	(83MFT & 103MFT)W	ROCK ISLAND	340	104

CONTRACT NO. 64H11

ILLINOIS FED. AID PROJECT

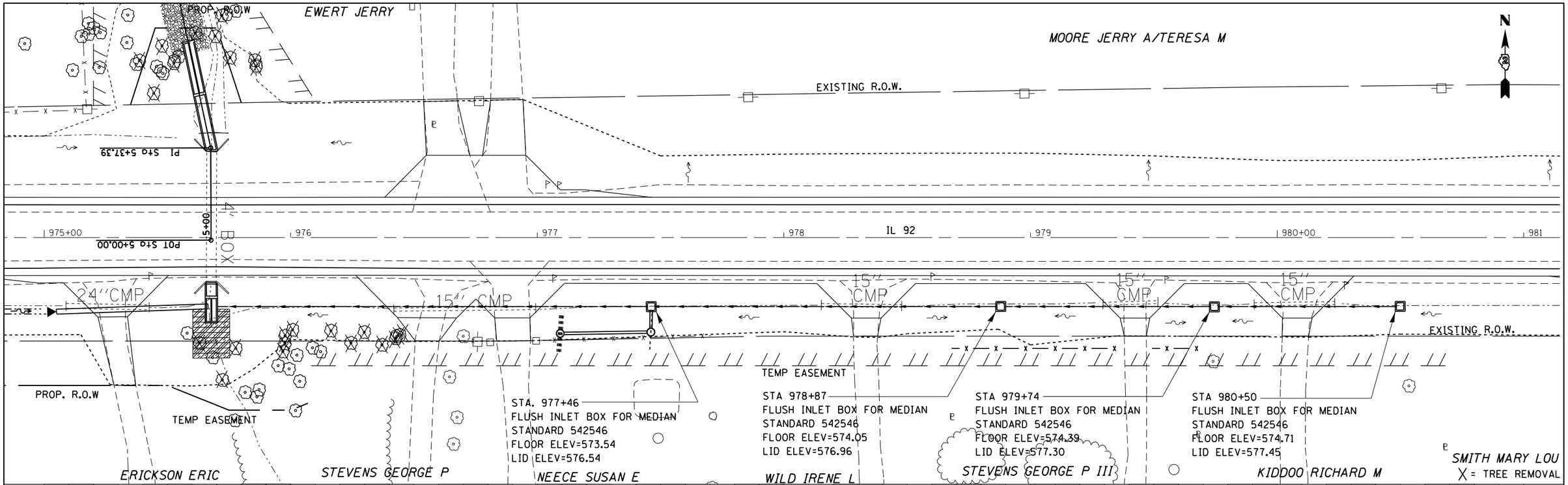

PLAN
SURVEYED
PLOTTED
ALIGNMENT CHECKED
RT. OF WAY CHECKED
CADD FILE NAME
NOTE BOOK NO.
BY
DATE

PROFILE
SURVEYED
PLOTTED
GRADES CHECKED
BM. NOTED
STRUCTURE NOTAT'NS CH'KD
NOTE BOOK NO.
BY
DATE

FILE NAME = c:\pw_work\pwidot\grantpm\d0261271\D207411-sht-drain.dgn	USER NAME = grantpm	DESIGNED -	REVISED -
		DRAWN -	REVISED -
	PLOT SCALE = 40.0000 ' / in.	CHECKED -	REVISED -
	PLOT DATE = Wed Mar 20 11:35:07 2013	DATE -	REVISED -

STATE OF ILLINOIS
DEPARTMENT OF TRANSPORTATION

IL 92 Drainage

SCALE: | SHEET OF SHEETS | STA. TO STA.

F.A.P. RTE.	SECTION	COUNTY	TOTAL SHEETS	SHEET NO.
599	(83MFT & 103MFT)W	ROCK ISLAND	340	105

CONTRACT NO. 64H11

ILLINOIS FED. AID PROJECT

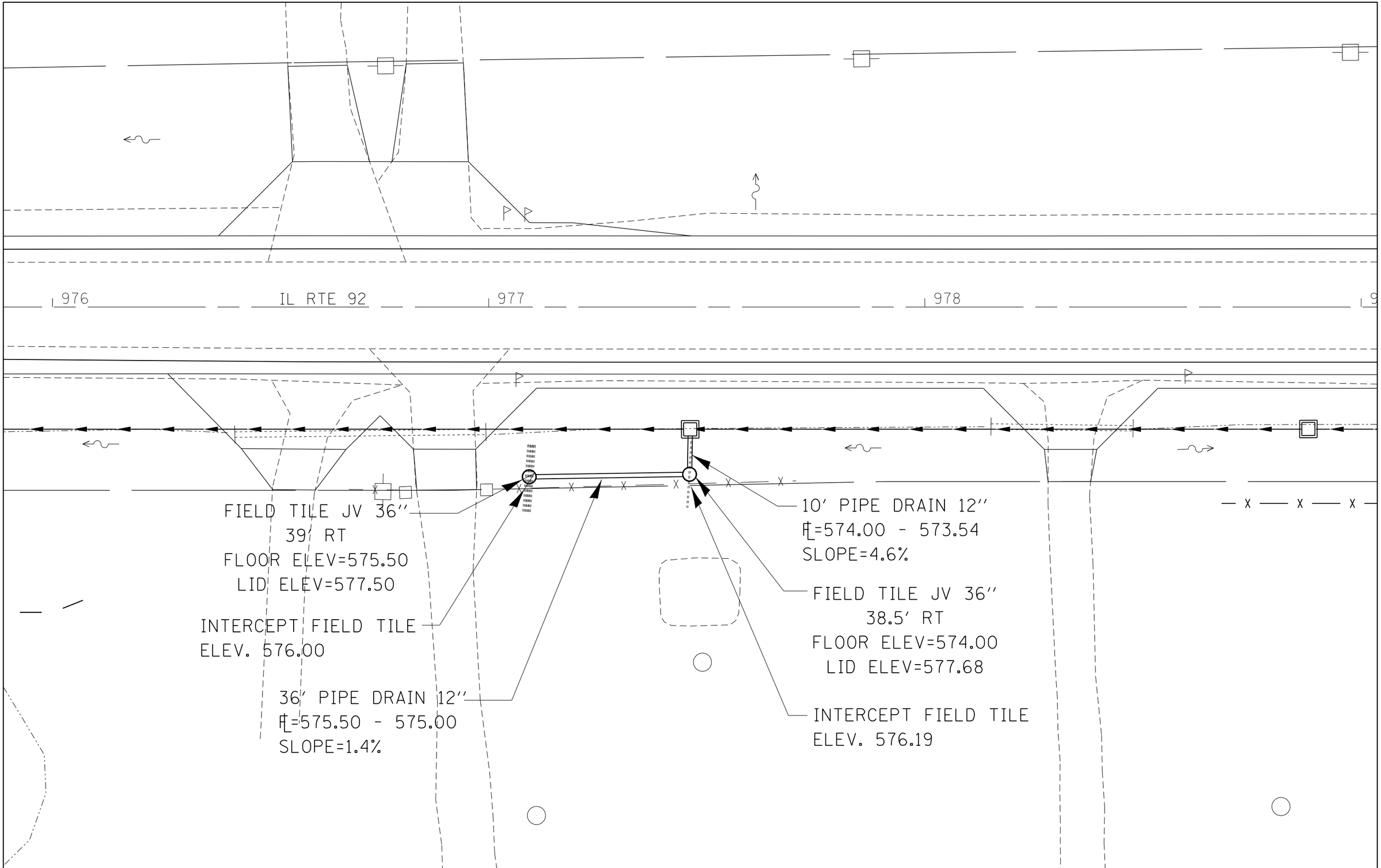

FILE NAME = c:\pw_work\pwidot\grantpm\d0261271\D207411-sht-drain.dgn	USER NAME = grantpm	DESIGNED -	REVISED -	STATE OF ILLINOIS DEPARTMENT OF TRANSPORTATION	IL 92 DRAINAGE FIELD TILE JUNCTION VAULT DETAILS	F.A.P RTE.	SECTION	COUNTY	TOTAL SHEETS	SHEET NO.
		DRAWN -	REVISED -			599	(83MFT & 103 MFT)W	ROCK ISLAND	340	106
	PLOT SCALE = 20.0000 ' / in.	CHECKED -	REVISED -					CONTRACT NO. 64H11		
Default	PLOT DATE = Wed Mar 20 11:35:24 2013	DATE -	REVISED -		SCALE: SHEET OF SHEETS STA. TO STA.		ILLINOIS	FED. AID PROJECT		

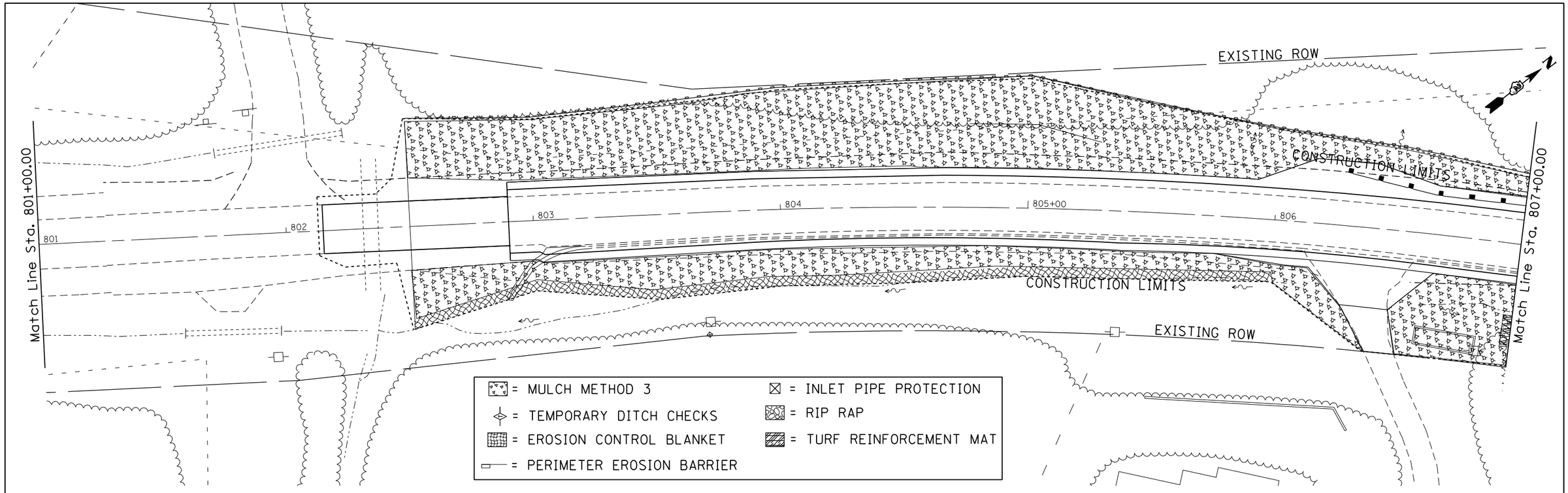

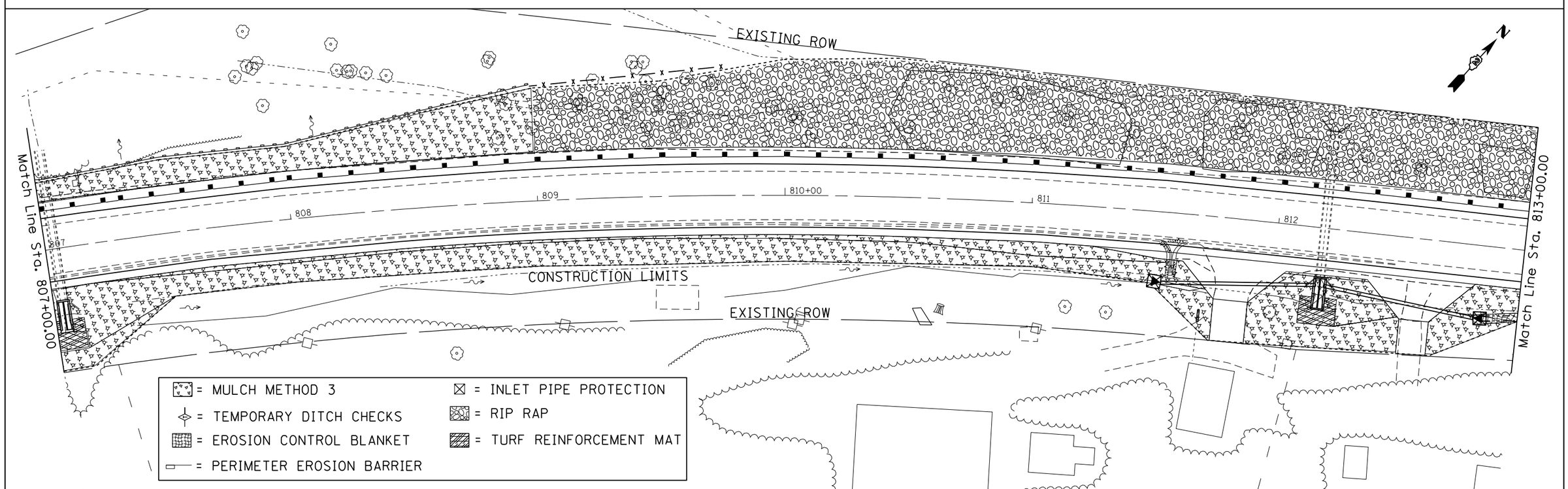

FILE NAME = c:\pw_work\pwidot\grantpm\d0261271\D207411-sht-eros.dgn	USER NAME = grantpm	DESIGNED -	REVISED -	STATE OF ILLINOIS DEPARTMENT OF TRANSPORTATION	IL ROUTE 92 EROSION CONTROL SHEETS	F.A.P. RTE.	SECTION	COUNTY	TOTAL SHEETS / SHEET NO.
	PLOT SCALE = 40.0000 ' / in.	DRAWN -	REVISED -			599	(83MFT & 103MFT)W	ROCK ISLAND	340 / 107
	PLOT DATE = Wed Mar 20 11:37:06 2013	CHECKED -	REVISED -					CONTRACT NO. 64H11	
		DATE -	REVISED -		SCALE: SHEET OF SHEETS STA. TO STA.			ILLINOIS FED. AID PROJECT	

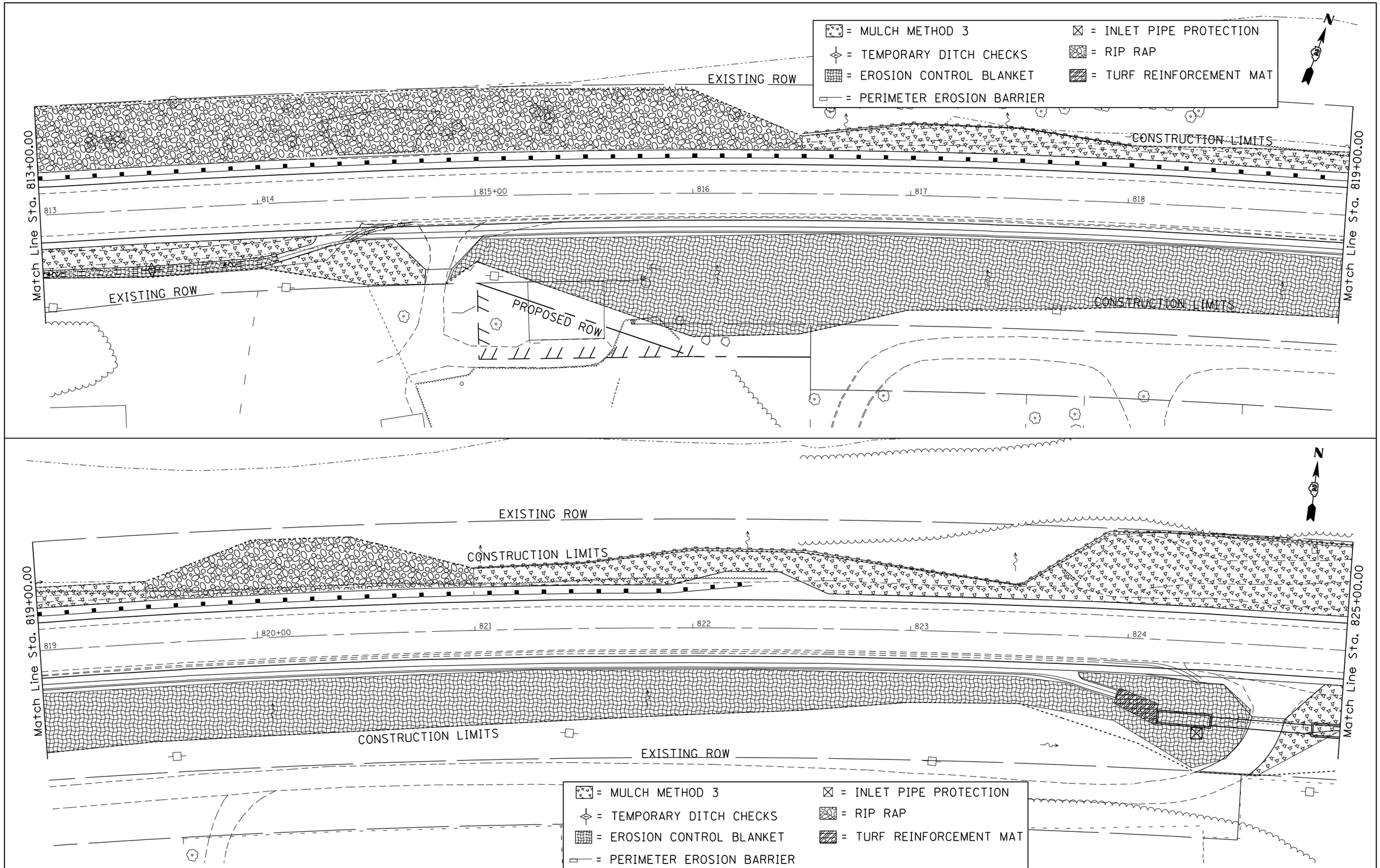

FILE NAME = c:\pw_work\pwidot\grantpm\d0261271\D207411-sht-eros.dgn	USER NAME = grantpm	DESIGNED -	REVISED -
		DRAWN -	REVISED -
	PLOT SCALE = 40.0000 ' / in.	CHECKED -	REVISED -
	PLOT DATE = Wed Mar 20 11:40:48 2013	DATE -	REVISED -

STATE OF ILLINOIS
DEPARTMENT OF TRANSPORTATION

IL ROUTE 92
EROSION CONTROL SHEETS

SCALE: | SHEET OF SHEETS | STA. TO STA.

F.A.P. RTE.	SECTION	COUNTY	TOTAL SHEETS	SHEET NO.
599	(83MFT & 103MFT)W	ROCK ISLAND	340	108
		CONTRACT NO. 64H11		
		ILLINOIS FED. AID PROJECT		

= MULCH METHOD 3
= TEMPORARY DITCH CHECKS
= EROSION CONTROL BLANKET
= PERIMETER EROSION BARRIER
= INLET PIPE PROTECTION
= RIP RAP
= TURF REINFORCEMENT MAT

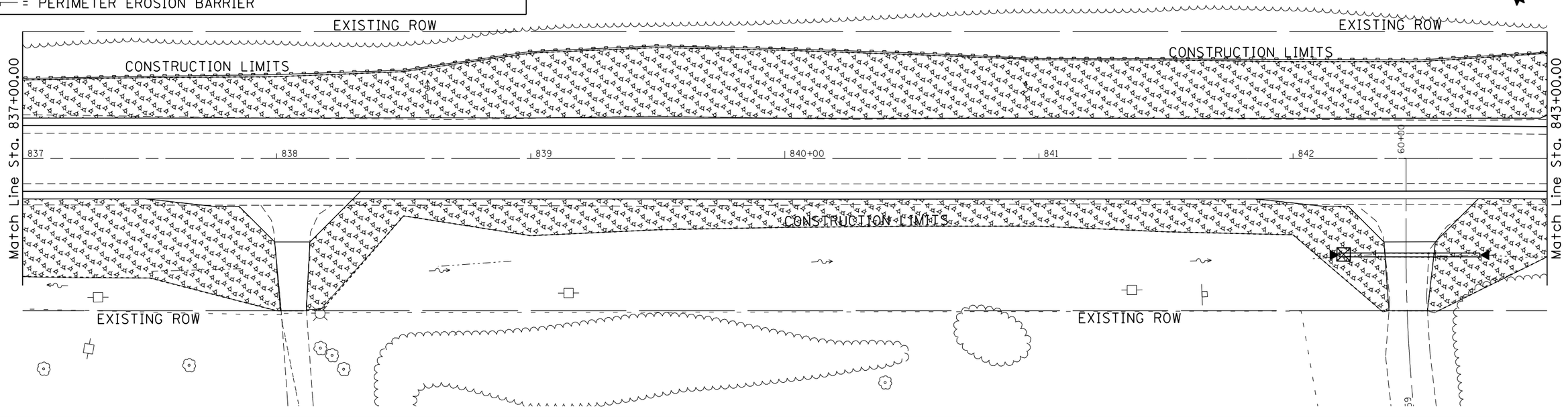

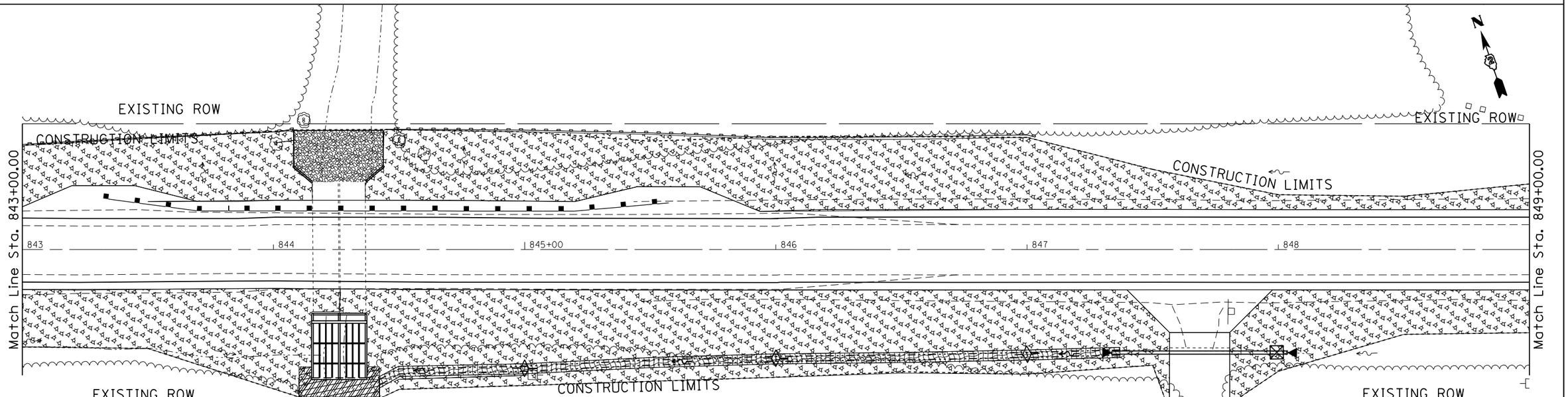

= MULCH METHOD 3
= TEMPORARY DITCH CHECKS
= EROSION CONTROL BLANKET
= PERIMETER EROSION BARRIER
= INLET PIPE PROTECTION
= RIP RAP
= TURF REINFORCEMENT MAT

FILE NAME = c:\pw_work\pwidot\grantpm\d0261271\D207411-sht-eros.dgn	USER NAME = grantpm	DESIGNED -	REVISED -	STATE OF ILLINOIS DEPARTMENT OF TRANSPORTATION	IL ROUTE 92 EROSION CONTROL SHEETS	F.A.P. RTE.	SECTION	COUNTY	TOTAL SHEETS / SHEET NO.
		DRAWN -	REVISED -			599	(83MFT & 103MFT)W	ROCK ISLAND	340 / 110
	PLOT SCALE = 40.0000 ' / in.	CHECKED -	REVISED -					CONTRACT NO. 64H11	
	PLOT DATE = Wed Mar 20 11:42:44 2013	DATE -	REVISED -		SCALE: SHEET OF SHEETS STA. TO STA.		ILLINOIS FED. AID PROJECT		

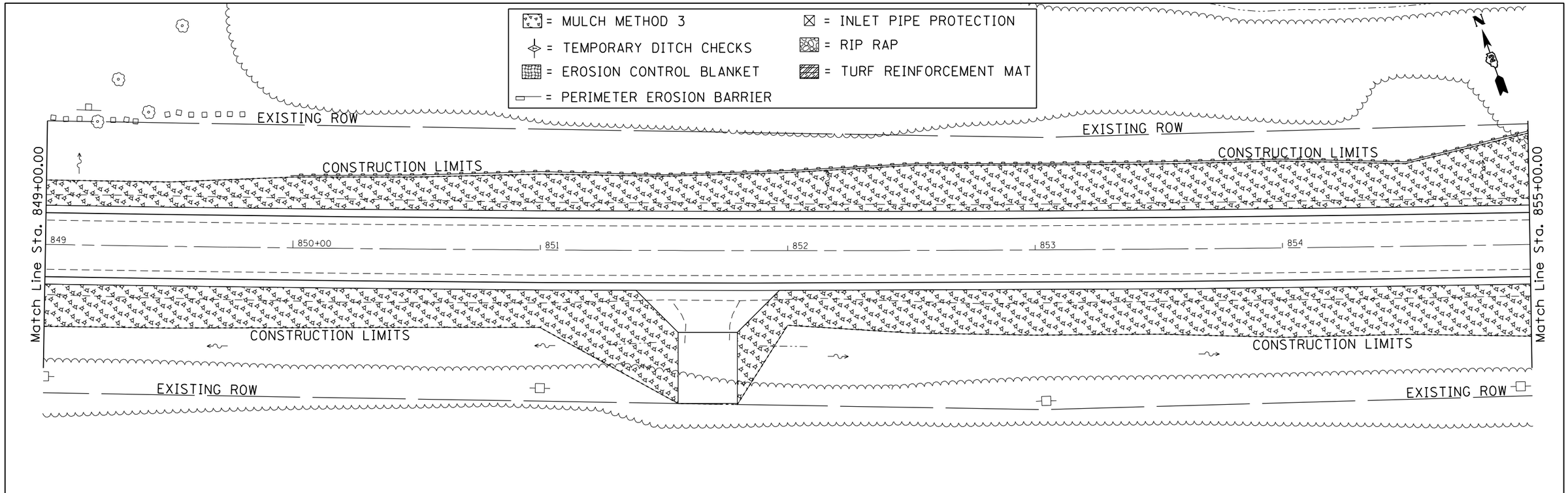

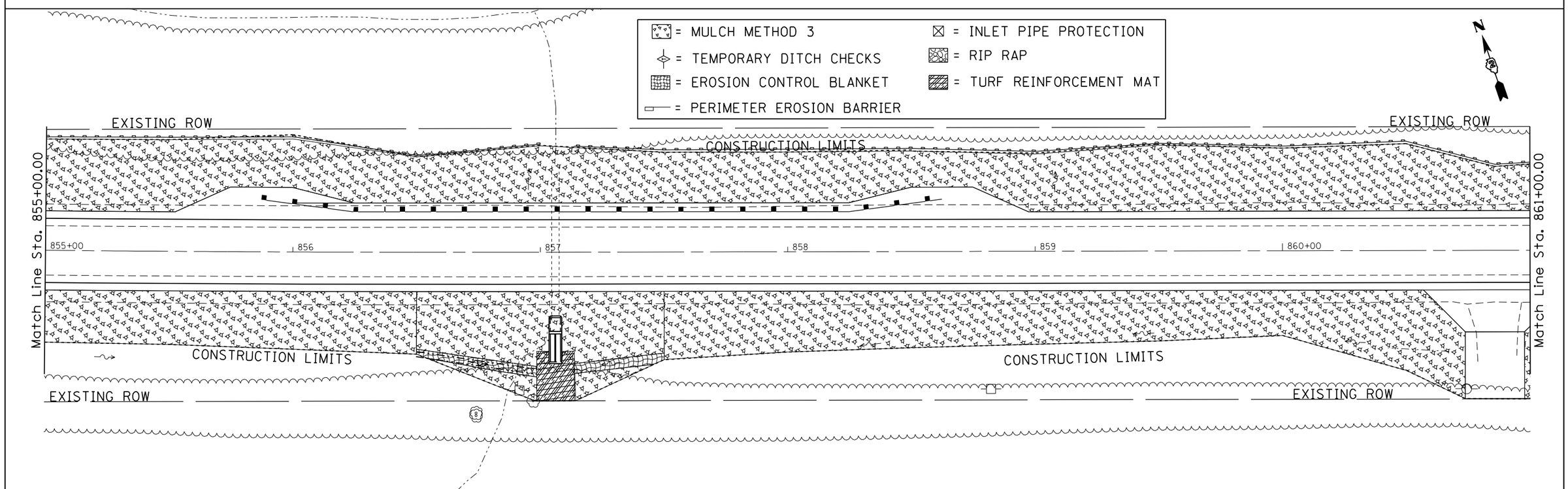

FILE NAME = c:\pw_work\pwidot\grantpm\d0261271\D207411-sht-eros.dgn	USER NAME = grantpm	DESIGNED -	REVISED -	STATE OF ILLINOIS DEPARTMENT OF TRANSPORTATION	IL ROUTE 92 EROSION CONTROL SHEETS	F.A.P. RTE.	SECTION	COUNTY	TOTAL SHEETS / SHEET NO.
	PLOT SCALE = 40.0000 ' / in.	DRAWN -	REVISED -			599	(83MFT & 103MFT)W	ROCK ISLAND	340 / 111
	PLOT DATE = Wed Mar 20 11:43:27 2013	CHECKED -	REVISED -					CONTRACT NO. 64H11	
		DATE -	REVISED -		SCALE: SHEET OF SHEETS STA. TO STA.			ILLINOIS FED. AID PROJECT	

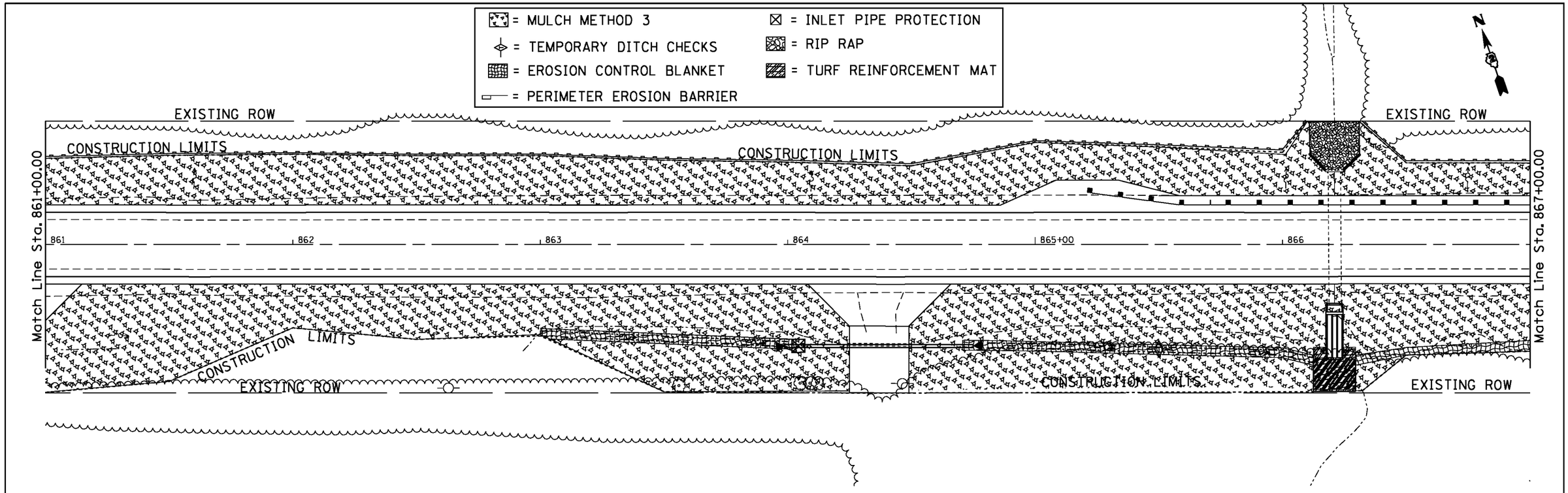

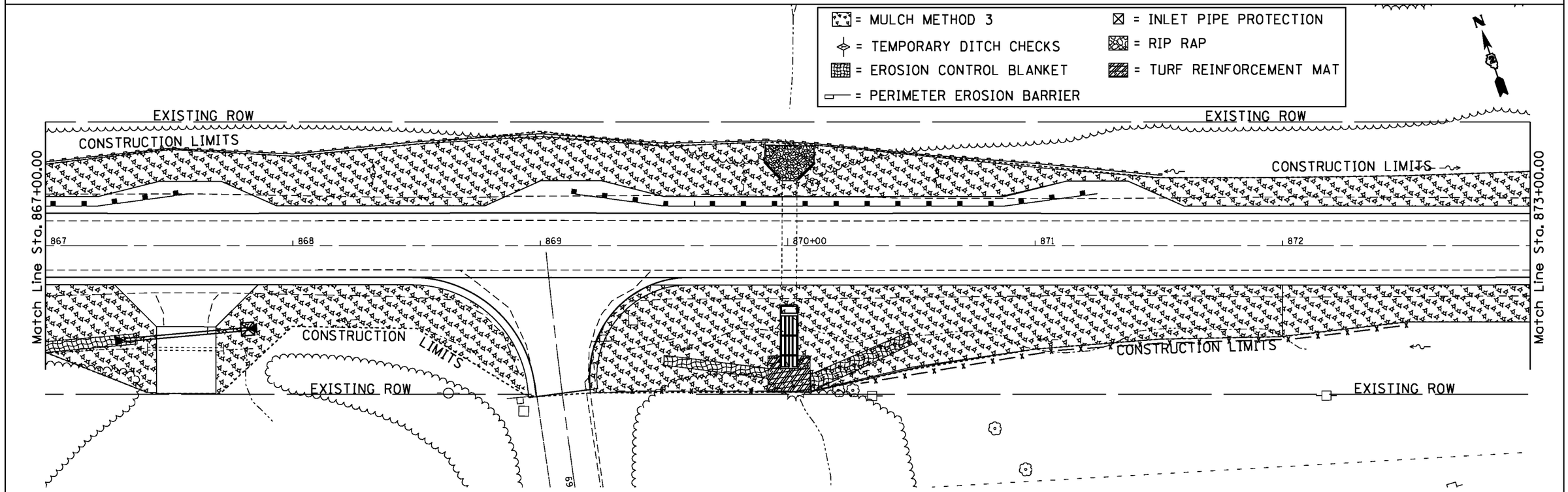

FILE NAME = C:\Projects\view\D207411-sht-eros.dgn	USER NAME = Hogenson.jd	DESIGNED -	REVISED -	STATE OF ILLINOIS DEPARTMENT OF TRANSPORTATION	IL ROUTE 92 EROSION CONTROL SHEETS	F.A.P. RTE.	SECTION	COUNTY	TOTAL SHEETS / SHEET NO.
		DRAWN -	REVISED -			599	(83MFT & 103MFT)W	ROCK ISLAND	340 / 112
	PLOT SCALE = 40.0000 ' / in.	CHECKED -	REVISED -					CONTRACT NO. 64H11	
	PLOT DATE = Tue Jul 09 13:53:54 2013	DATE -	REVISED -		SCALE: SHEET OF SHEETS STA. TO STA.		ILLINOIS FED. AID PROJECT		

= MULCH METHOD 3
= TEMPORARY DITCH CHECKS
= EROSION CONTROL BLANKET
= PERIMETER EROSION BARRIER
= INLET PIPE PROTECTION
= RIP RAP
= TURF REINFORCEMENT MAT

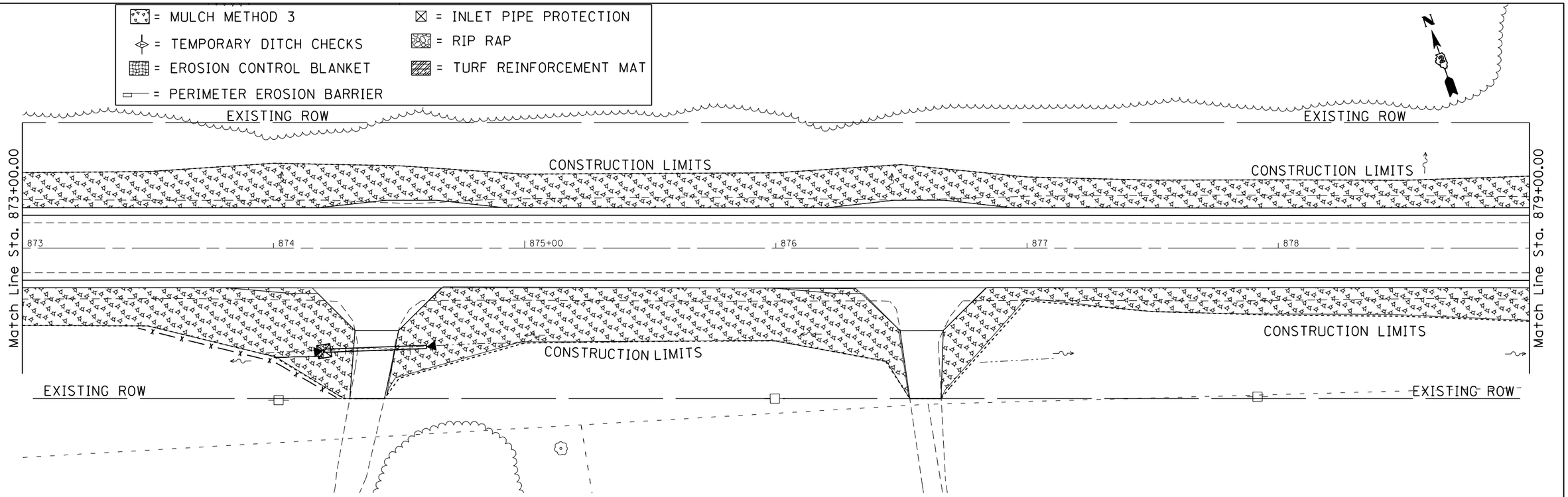

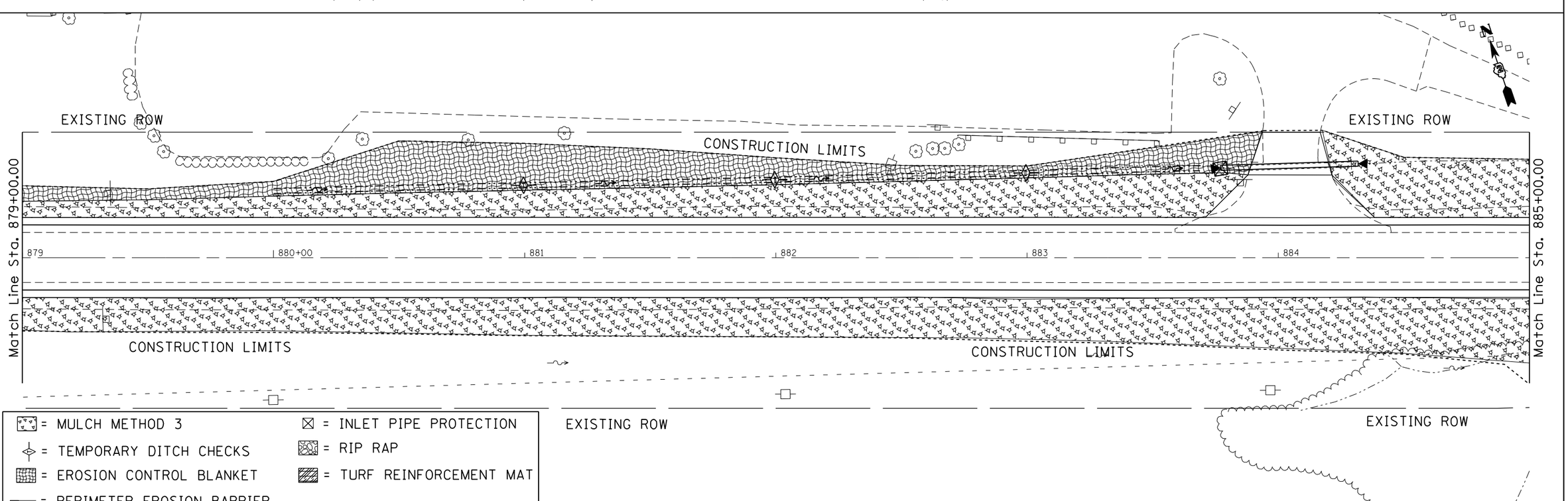

= MULCH METHOD 3
= TEMPORARY DITCH CHECKS
= EROSION CONTROL BLANKET
= PERIMETER EROSION BARRIER
= INLET PIPE PROTECTION
= RIP RAP
= TURF REINFORCEMENT MAT

FILE NAME = c:\pw_work\pwidot\grantpm\d0261271\D207411-sht-eros.dgn	USER NAME = grantpm	DESIGNED -	REVISED -
		DRAWN -	REVISED -
	PLOT SCALE = 40.0000 ' / in.	CHECKED -	REVISED -
	PLOT DATE = Wed Mar 20 11:45:00 2013	DATE -	REVISED -

STATE OF ILLINOIS
DEPARTMENT OF TRANSPORTATION

IL ROUTE 92
EROSION CONTROL SHEETS

SCALE: | SHEET OF SHEETS | STA. TO STA.

F.A.P. RTE.	SECTION	COUNTY	TOTAL SHEETS	SHEET NO.
599	(83MFT & 103MFT)W	ROCK ISLAND	340	113
		CONTRACT NO. 64H11		
		ILLINOIS FED. AID PROJECT		

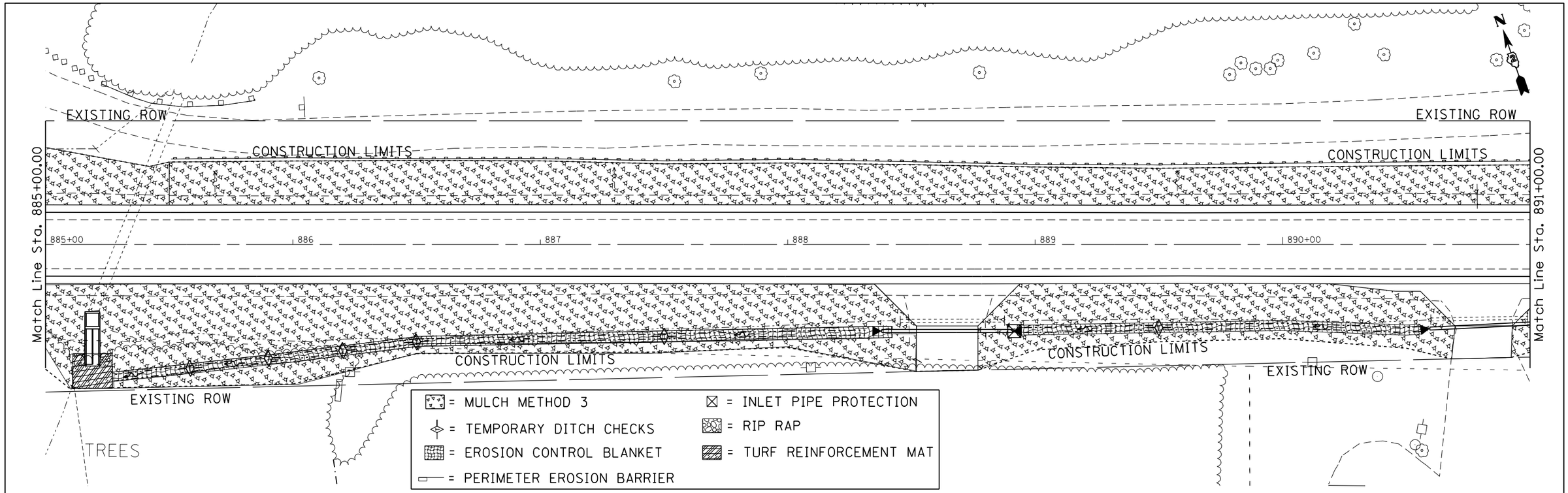

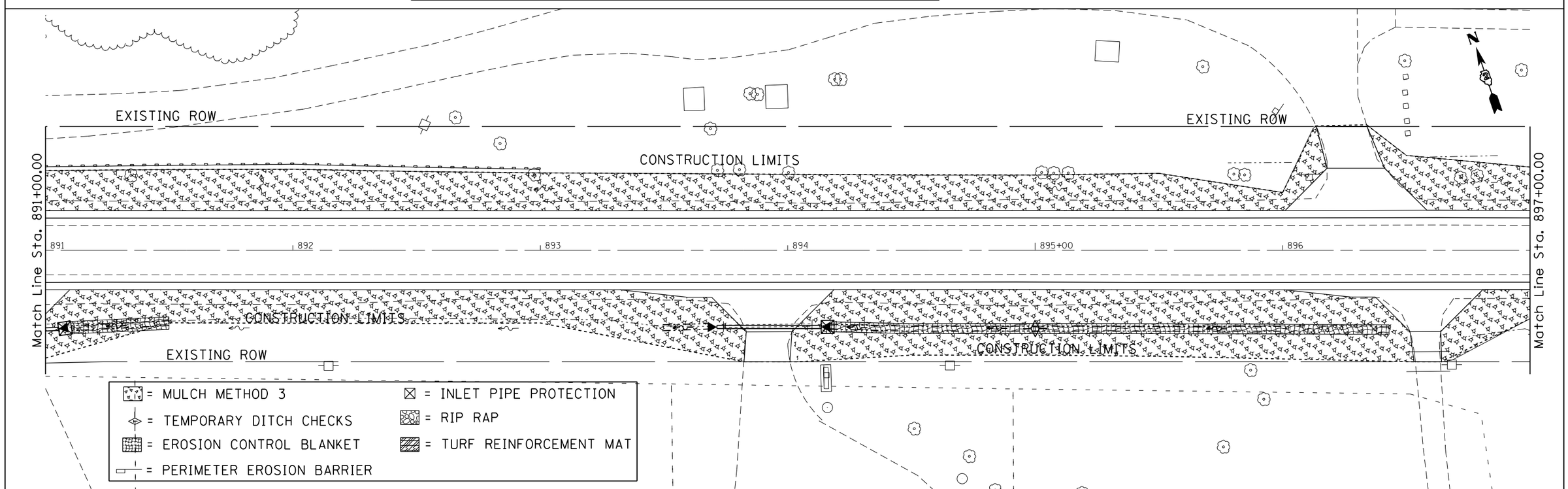

FILE NAME = c:\pw_work\pwidot\grantpm\d0261271\D207411-sht-eros.dgn	USER NAME = grantpm	DESIGNED -	REVISED -
	PLOT SCALE = 40.0000 ' / in.	DRAWN -	REVISED -
	PLOT DATE = Wed Mar 20 11:48:15 2013	CHECKED -	REVISED -
		DATE -	REVISED -

STATE OF ILLINOIS
DEPARTMENT OF TRANSPORTATION

IL ROUTE 92
EROSION CONTROL SHEETS

SCALE: | SHEET OF SHEETS | STA. TO STA.

F.A.P. RTE.	SECTION	COUNTY	TOTAL SHEETS	SHEET NO.
599	(83MFT & 103MFT)W	ROCK ISLAND	340	114
		CONTRACT NO. 64H11		
		ILLINOIS FED. AID PROJECT		

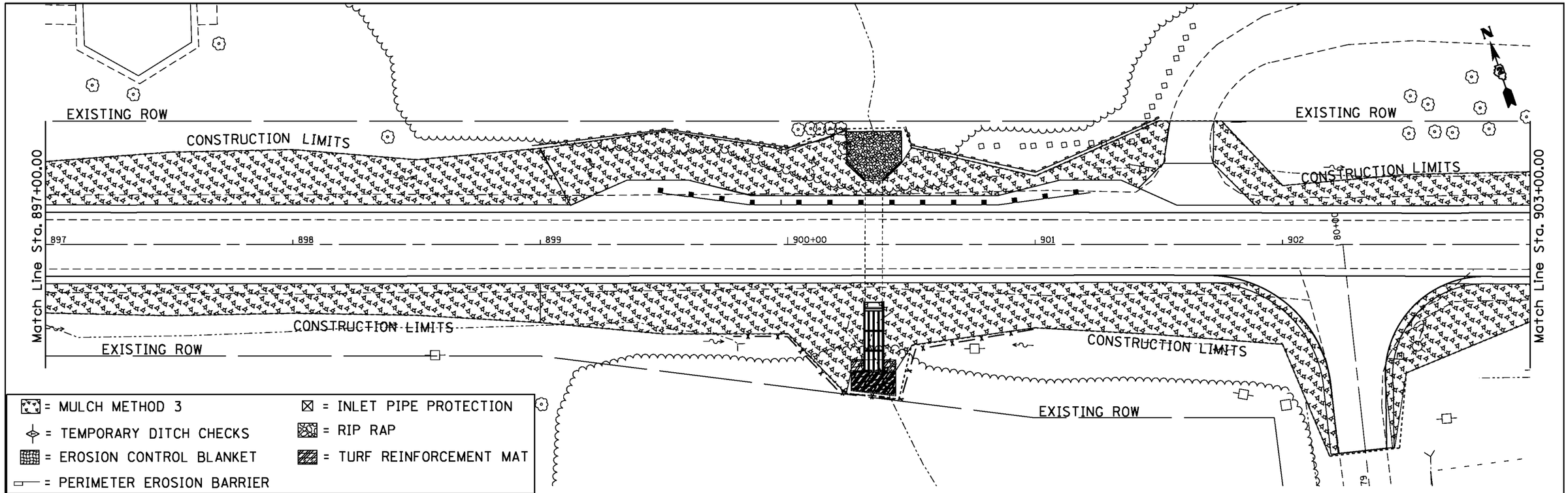

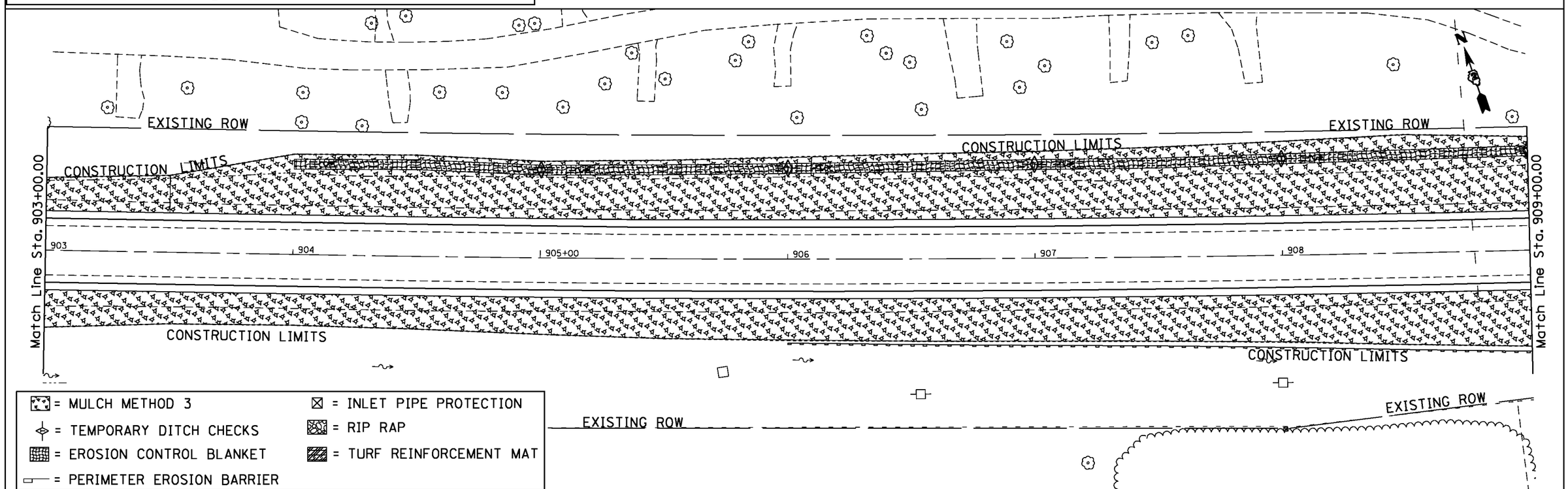

FILE NAME = C:\Projects\view\D207411-sht-eros.dgn	USER NAME = Hogensonjd	DESIGNED -	REVISED -	STATE OF ILLINOIS DEPARTMENT OF TRANSPORTATION	IL ROUTE 92 EROSION CONTROL SHEETS	F.A.P. RTE.	SECTION	COUNTY	TOTAL SHEETS	SHEET NO.
		DRAWN -	REVISED -			599	(83MFT & 103MFT)W	ROCK ISLAND	340	115
	PLOT SCALE = 40.0000 ' / in.	CHECKED -	REVISED -					CONTRACT NO. 64H11		
	PLOT DATE = Tue Jul 09 13:54:43 2013	DATE -	REVISED -		SCALE: SHEET OF SHEETS STA. TO STA.		ILLINOIS FED. AID PROJECT			

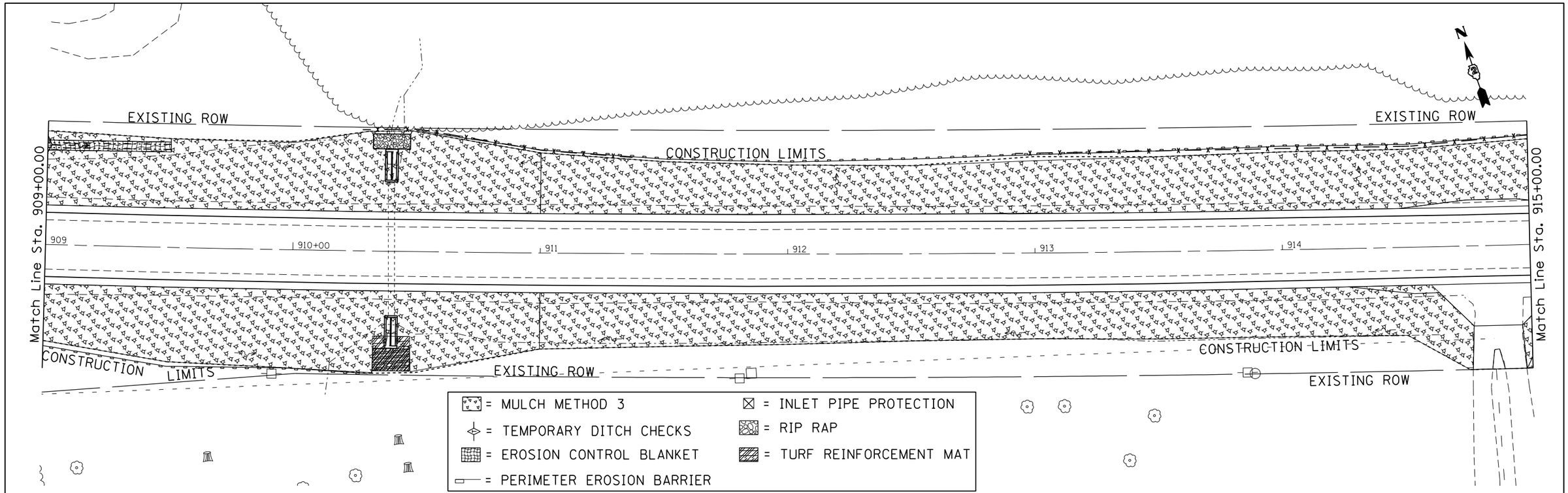

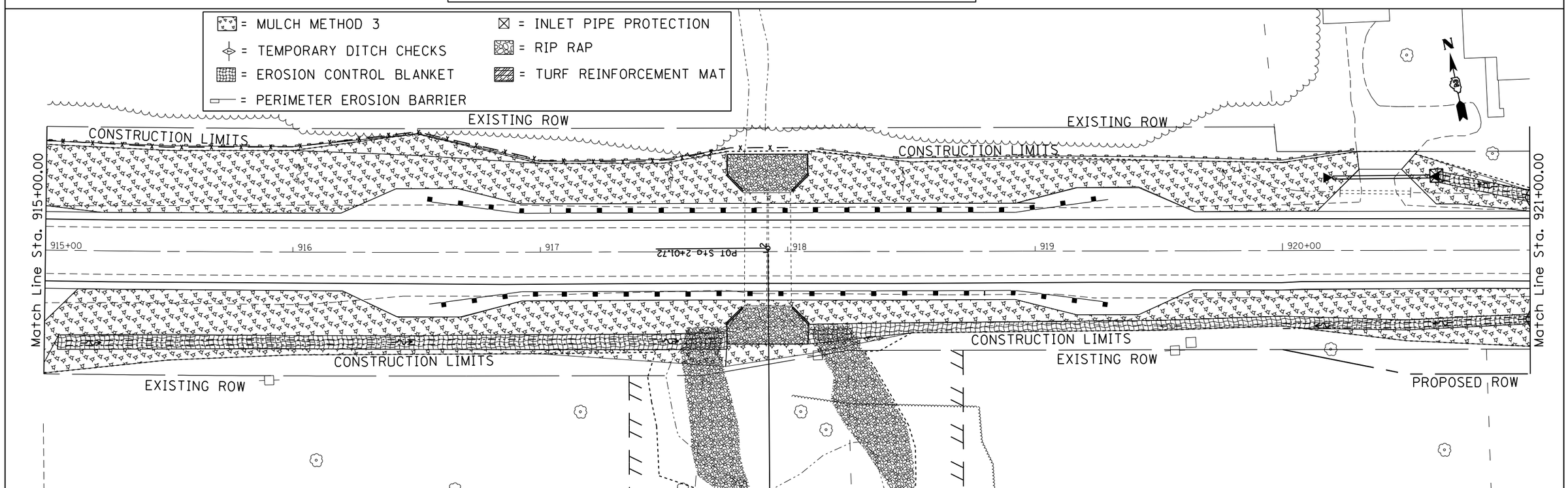

FILE NAME = c:\pw_work\pwidot\grantpm\d0261271\D207411-sht-eros.dgn	USER NAME = grantpm	DESIGNED -	REVISED -	STATE OF ILLINOIS DEPARTMENT OF TRANSPORTATION	IL ROUTE 92 EROSION CONTROL SHEETS	F.A.P. RTE.	SECTION	COUNTY	TOTAL SHEETS / SHEET NO.
	PLOT SCALE = 40.0000 ' / in.	DRAWN -	REVISED -			599	(83MFT & 103MFT)W	ROCK ISLAND	340 / 116
	PLOT DATE = Wed Mar 20 11:49:32 2013	CHECKED -	REVISED -					CONTRACT NO. 64H11	
		DATE -	REVISED -		SCALE: SHEET OF SHEETS STA. TO STA.			ILLINOIS FED. AID PROJECT	

= MULCH METHOD 3
= TEMPORARY DITCH CHECKS
= EROSION CONTROL BLANKET
= PERIMETER EROSION BARRIER
= INLET PIPE PROTECTION
= RIP RAP
= TURF REINFORCEMENT MAT

EXISTING ROW

Match Line Sta. 921+00.00

921 | 922 | 923 | 924 | 925+00 | 926

PROPOSED ROW

EXISTING ROW

PROPOSED ROW

EXISTING ROW

PROPOSED ROW

Match Line Sta. 927+00.00

EXISTING ROW

CONSTRUCTION LIMITS

CONSTRUCTION LIMITS

Match Line Sta. 927+00.00

927 | 928 | 929 | 930+00 | 931 | 932

Match Line Sta. 933+00.00

EXISTING ROW

CONSTRUCTION LIMITS

EXISTING ROW

PROPOSED ROW

= MULCH METHOD 3
= TEMPORARY DITCH CHECKS
= EROSION CONTROL BLANKET
= PERIMETER EROSION BARRIER
= INLET PIPE PROTECTION
= RIP RAP
= TURF REINFORCEMENT MAT

FILE NAME = C:\Projects\view\D207411-sht-eros.dgn	USER NAME = Hogensonjd	DESIGNED -	REVISED -	STATE OF ILLINOIS DEPARTMENT OF TRANSPORTATION	IL ROUTE 92 EROSION CONTROL SHEETS	F.A.P. RTE.	SECTION	COUNTY	TOTAL SHEETS	SHEET NO.
		DRAWN -	REVISED -			599	(83MFT & 103MFT)W	ROCK ISLAND	340	117
	PLOT SCALE = 40.0000 ' / in.	CHECKED -	REVISED -					CONTRACT NO. 64H11		
	PLOT DATE = Tue Jul 09 13:55:25 2013	DATE -	REVISED -		SCALE: SHEET OF SHEETS STA. TO STA.		ILLINOIS FED. AID PROJECT			

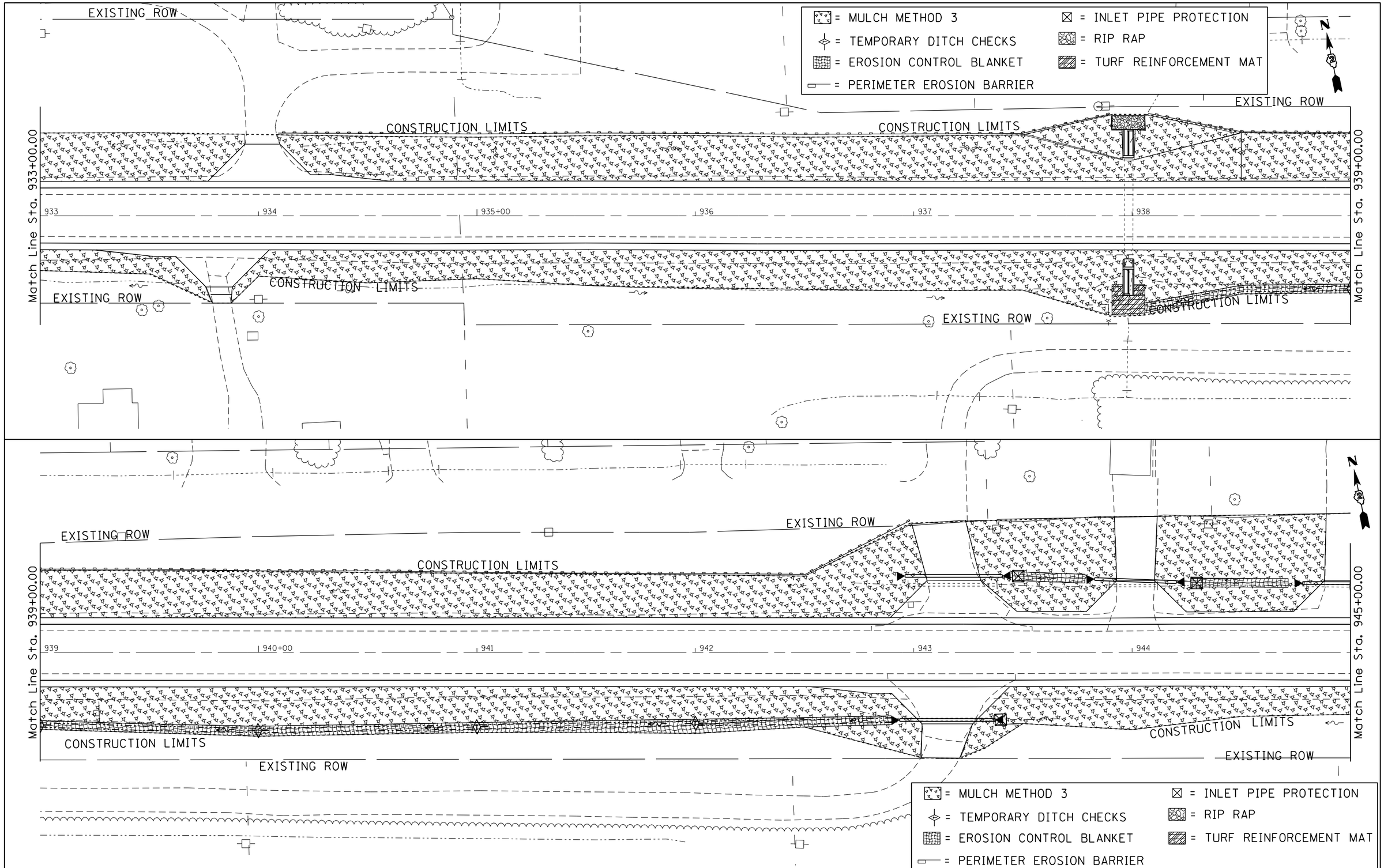

FILE NAME = c:\pw_work\pwidot\grantpm\d0261271\D207411-sht-eros.dgn	USER NAME = grantpm	DESIGNED -	REVISED -
		DRAWN -	REVISED -
	PLOT SCALE = 40.0000 ' / in.	CHECKED -	REVISED -
	PLOT DATE = Wed Mar 20 11:51:04 2013	DATE -	REVISED -

STATE OF ILLINOIS
DEPARTMENT OF TRANSPORTATION

IL ROUTE 92
EROSION CONTROL SHEETS

SCALE: | SHEET OF SHEETS | STA. TO STA.

F.A.P. RTE.	SECTION	COUNTY	TOTAL SHEETS	SHEET NO.
599	(83MFT & 103MFT)W	ROCK ISLAND	340	118
		CONTRACT NO. 64H11		
		ILLINOIS FED. AID PROJECT		

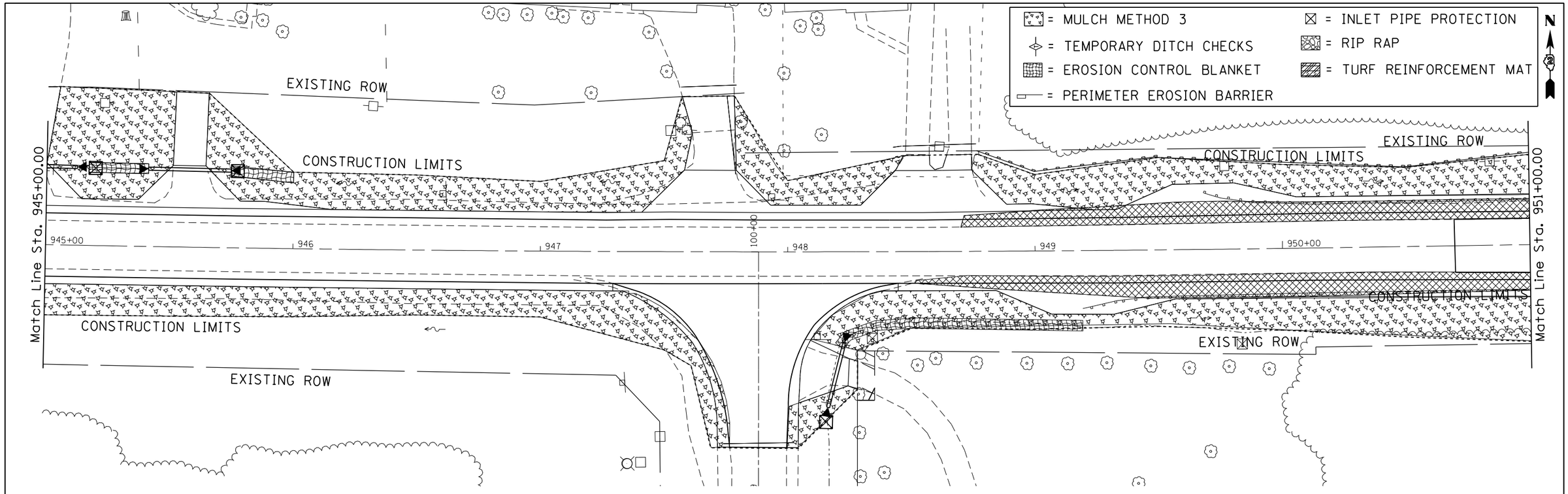

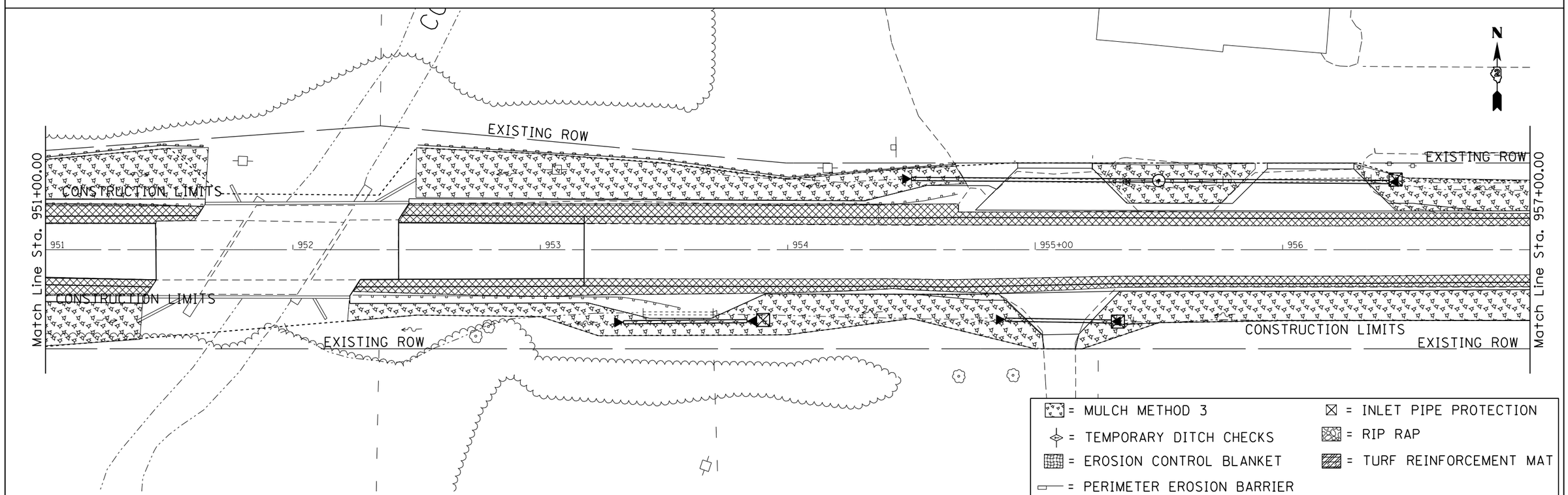

FILE NAME = c:\pw_work\pwidot\grantpm\d0261271\D207411-sht-eros.dgn	USER NAME = grantpm	DESIGNED -	REVISED -	STATE OF ILLINOIS DEPARTMENT OF TRANSPORTATION	IL ROUTE 92 EROSION CONTROL SHEETS	F.A.P. RTE.	SECTION	COUNTY	TOTAL SHEETS / SHEET NO.
	PLOT SCALE = 40.0000 ' / in.	DRAWN -	REVISED -			599	(83MFT & 103MFT)W	ROCK ISLAND	340 / 119
	PLOT DATE = Wed Mar 20 11:51:34 2013	CHECKED -	REVISED -					CONTRACT NO. 64H11	
		DATE -	REVISED -		SCALE: SHEET OF SHEETS STA. TO STA.			ILLINOIS FED. AID PROJECT	

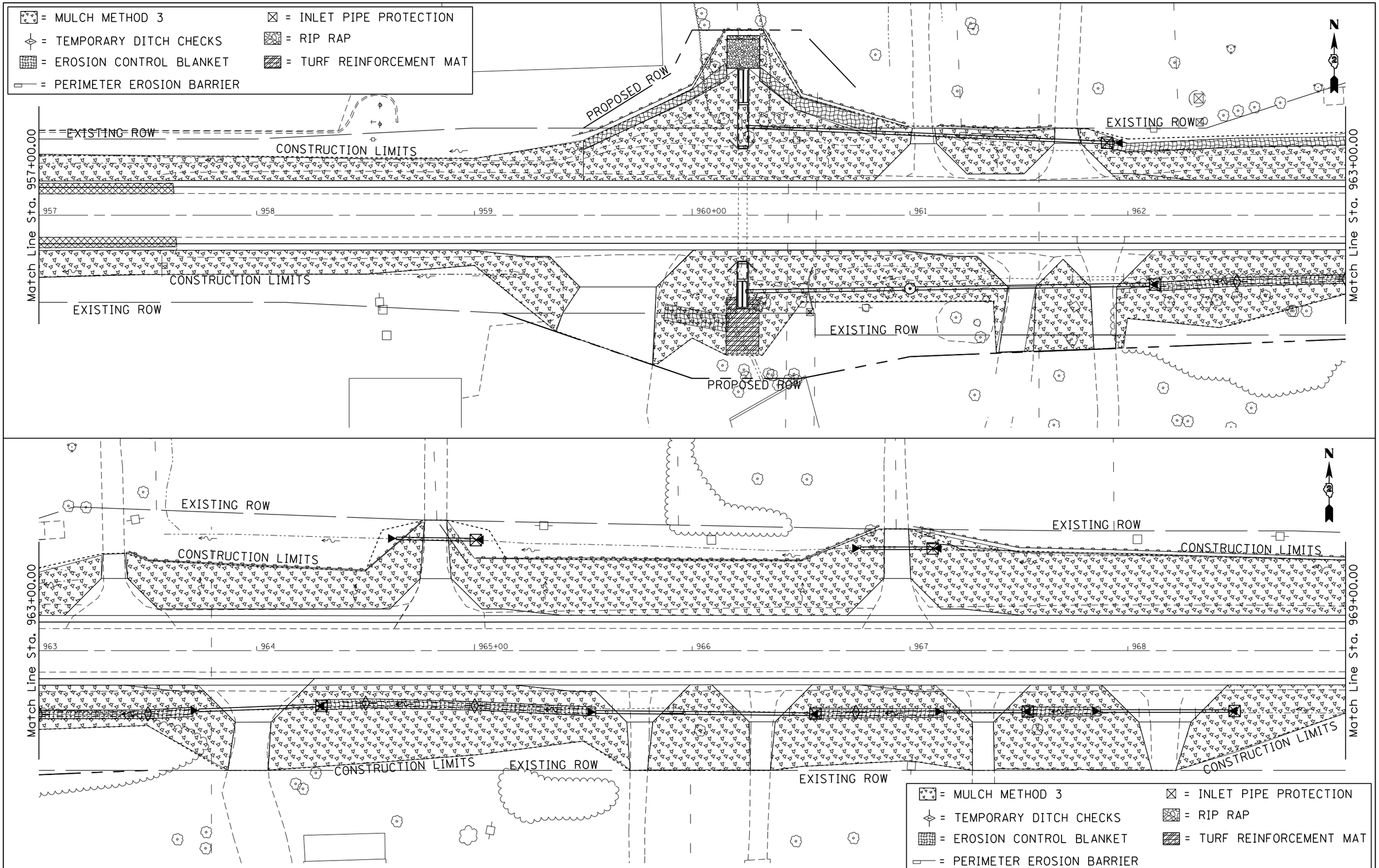

FILE NAME = c:\pw_work\pwidot\grantpm\d0261271\D207411-sht-eros.dgn	USER NAME = grantpm	DESIGNED -	REVISED -	STATE OF ILLINOIS DEPARTMENT OF TRANSPORTATION	IL ROUTE 92 EROSION CONTROL SHEETS	F.A.P. RTE.	SECTION	COUNTY	TOTAL SHEETS	SHEET NO.
	PLOT SCALE = 40.0000 ' / in.	DRAWN -	REVISED -			599	(83MFT & 103MFT)W	ROCK ISLAND	340	120
	PLOT DATE = Wed Mar 20 11:52:03 2013	CHECKED -	REVISED -		SCALE: SHEET OF SHEETS STA. TO STA.			CONTRACT NO. 64H11		
		DATE -	REVISED -					ILLINOIS FED. AID PROJECT		

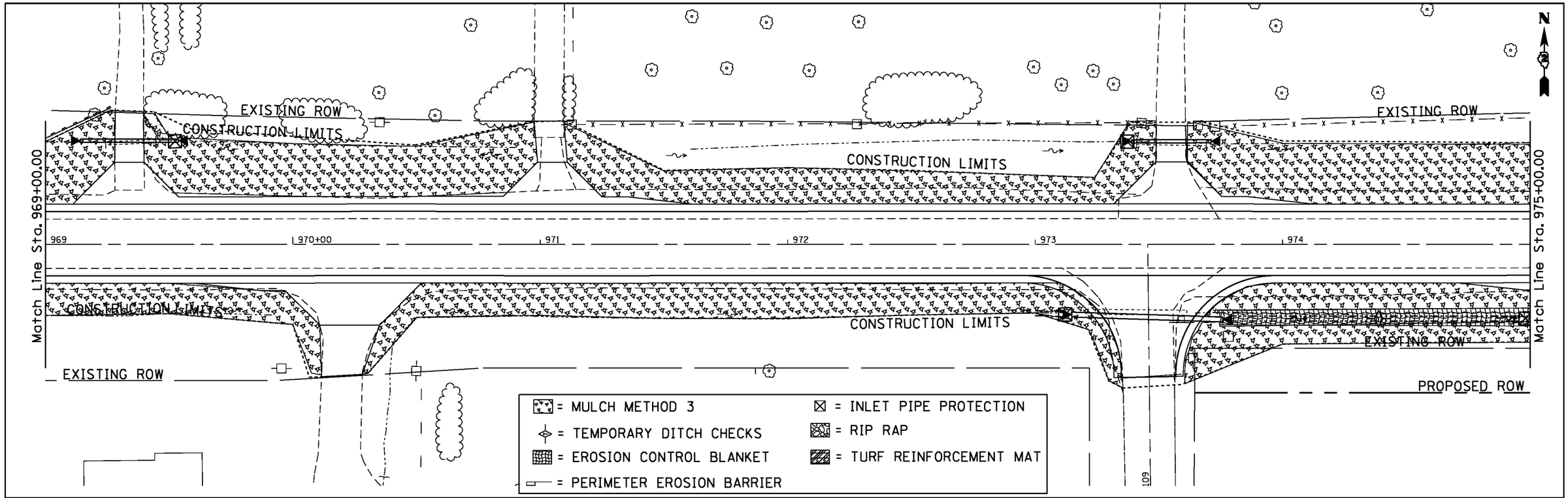

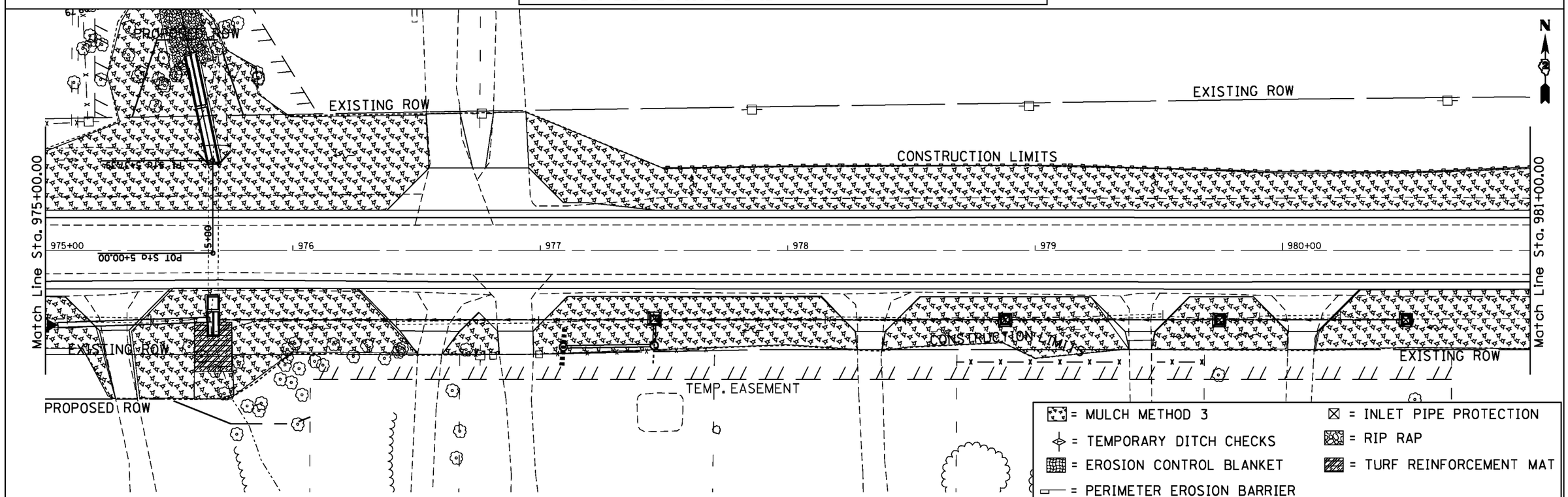

FILE NAME = C:\Projects\view\D207411-sht-eros.dgn	USER NAME = Hogensonjd	DESIGNED -	REVISED -	STATE OF ILLINOIS DEPARTMENT OF TRANSPORTATION	IL ROUTE 92 EROSION CONTROL SHEETS	F.A.P. RTE.	SECTION	COUNTY	TOTAL SHEETS	SHEET NO.
		DRAWN -	REVISED -			599	(83MFT & 103MFT)W	ROCK ISLAND	340	121
	PLOT SCALE = 40.0000 ' / in.	CHECKED -	REVISED -					CONTRACT NO. 64H11		
	PLOT DATE = Tue Jul 09 13:56:09 2013	DATE -	REVISED -		SCALE: SHEET OF SHEETS STA. TO STA.		ILLINOIS FED. AID PROJECT			

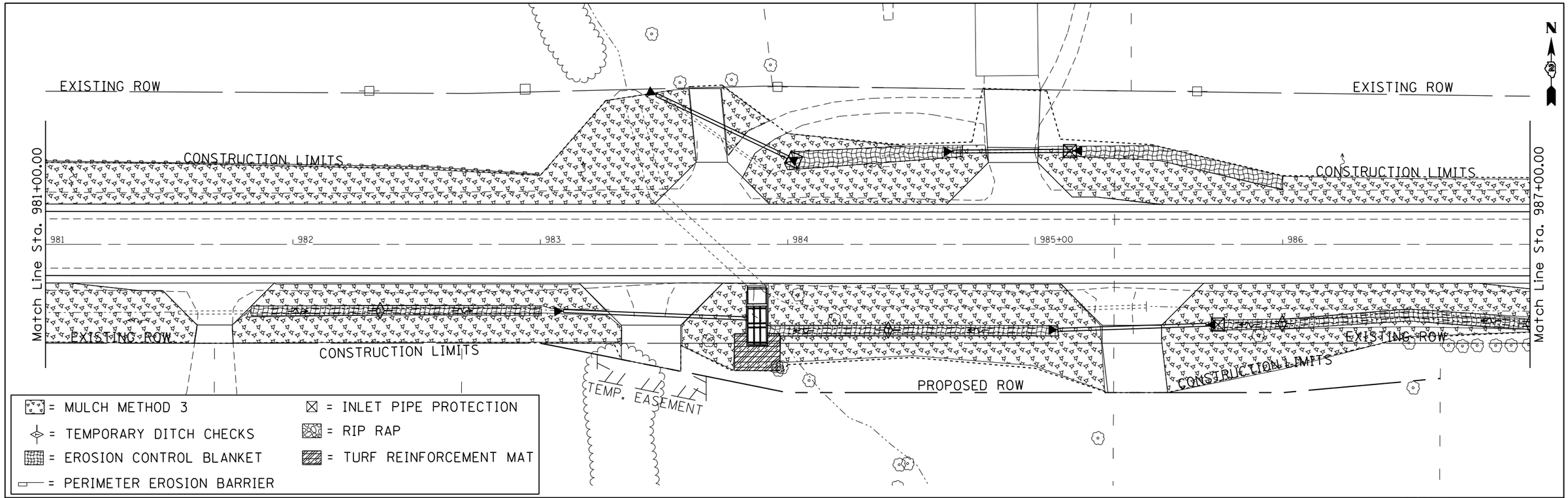

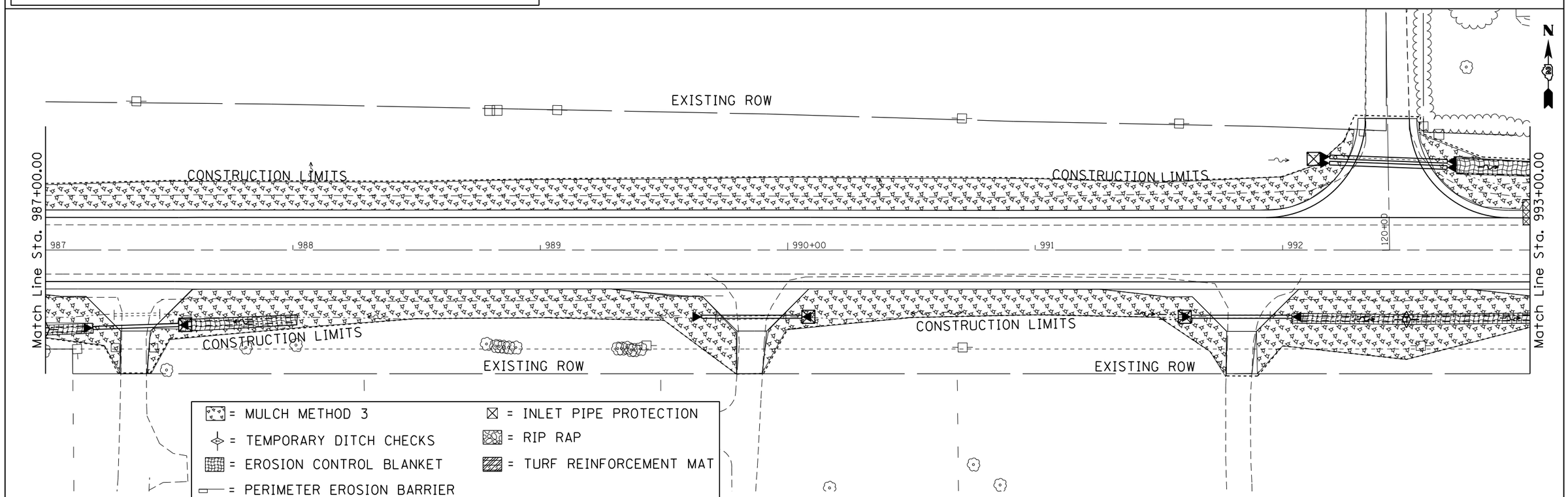

FILE NAME = c:\pw_work\pwidot\grantpm\d0261271\D207411-sht-eros.dgn	USER NAME = grantpm	DESIGNED -	REVISED -
	PLOT SCALE = 40.0000 ' / in.	DRAWN -	REVISED -
	PLOT DATE = Wed Mar 20 11:54:25 2013	CHECKED -	REVISED -
		DATE -	REVISED -

STATE OF ILLINOIS
DEPARTMENT OF TRANSPORTATION

IL ROUTE 92
EROSION CONTROL SHEETS

SCALE: | SHEET OF SHEETS | STA. TO STA.

F.A.P. RTE.	SECTION	COUNTY	TOTAL SHEETS	SHEET NO.
599	(83MFT & 103MFT)W	ROCK ISLAND	340	122
		CONTRACT NO. 64H11		
		ILLINOIS FED. AID PROJECT		

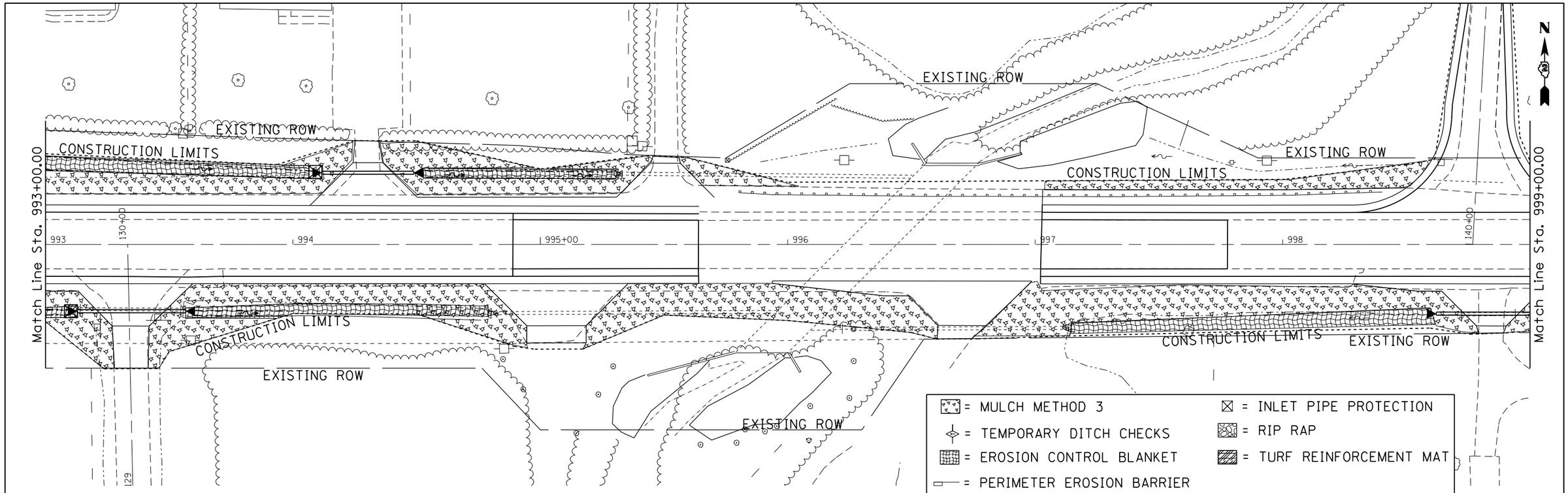

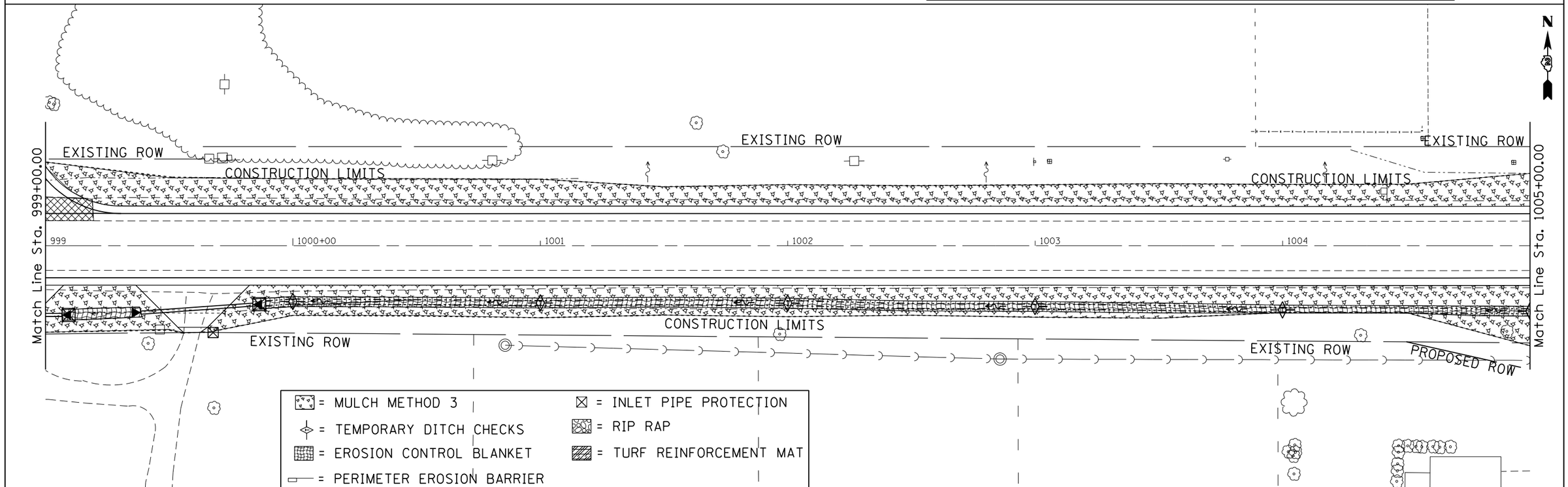

FILE NAME = c:\pw_work\pwidot\grantpm\d0261271\D207411-sht-eros.dgn	USER NAME = grantpm	DESIGNED -	REVISED -
	PLOT SCALE = 40.0000 ' / in.	DRAWN -	REVISED -
	PLOT DATE = Wed Mar 20 11:55:01 2013	CHECKED -	REVISED -
		DATE -	REVISED -

STATE OF ILLINOIS
DEPARTMENT OF TRANSPORTATION

IL ROUTE 92
EROSION CONTROL SHEETS

SCALE: | SHEET OF SHEETS | STA. TO STA.

F.A.P. RTE.	SECTION	COUNTY	TOTAL SHEETS	SHEET NO.
599	(83MFT & 103MFT)W	ROCK ISLAND	340	123
		CONTRACT NO. 64H11		
		ILLINOIS FED. AID PROJECT		

= MULCH METHOD 3
= TEMPORARY DITCH CHECKS
= EROSION CONTROL BLANKET
= PERIMETER EROSION BARRIER
= INLET PIPE PROTECTION
= RIP RAP
= TURF REINFORCEMENT MAT

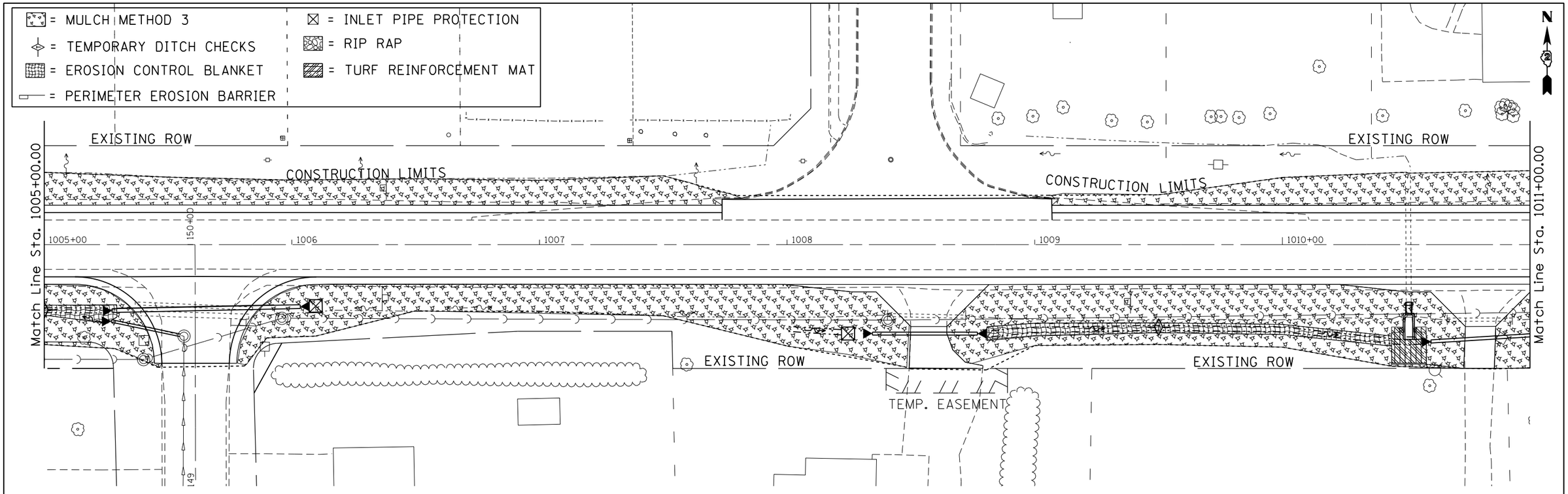

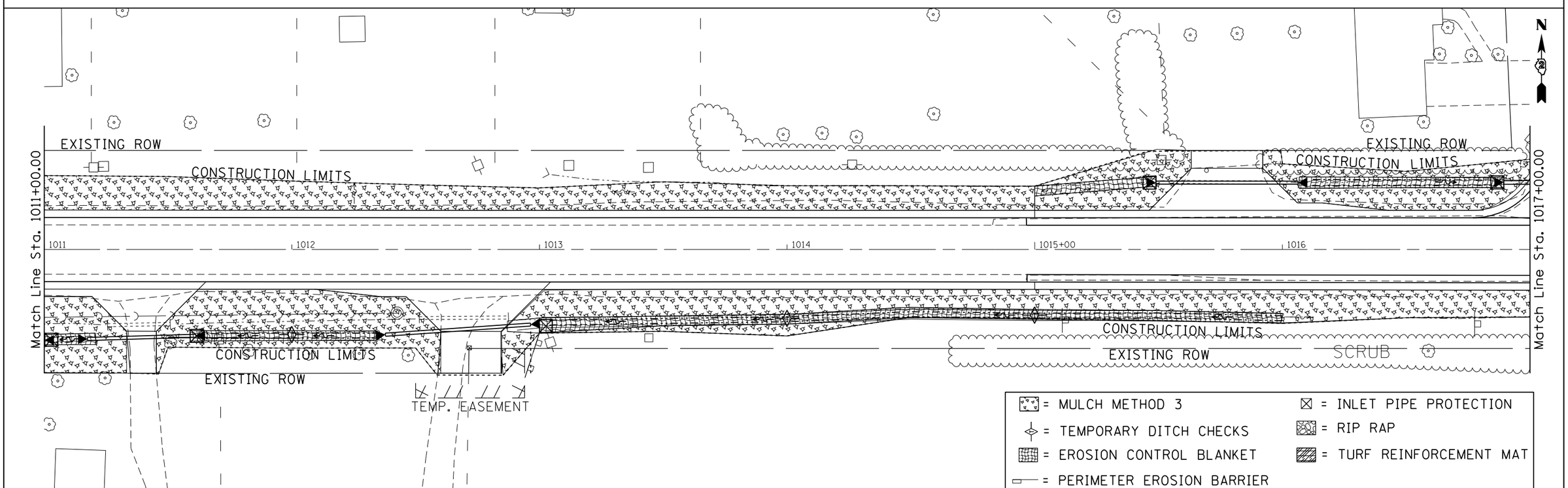

= MULCH METHOD 3
= TEMPORARY DITCH CHECKS
= EROSION CONTROL BLANKET
= PERIMETER EROSION BARRIER
= INLET PIPE PROTECTION
= RIP RAP
= TURF REINFORCEMENT MAT

FILE NAME = c:\pw_work\pwidot\grantpm\d0261271\D207411-sht-eros.dgn	USER NAME = grantpm	DESIGNED -	REVISED -	STATE OF ILLINOIS DEPARTMENT OF TRANSPORTATION	IL ROUTE 92 EROSION CONTROL SHEETS	F.A.P. RTE.	SECTION	COUNTY	TOTAL SHEETS / SHEET NO.
	PLOT SCALE = 40.0000 ' / in.	DRAWN -	REVISED -			599	(83MFT & 103MFT)W	ROCK ISLAND	340 / 124
	PLOT DATE = Wed Mar 20 11:55:25 2013	CHECKED -	REVISED -					CONTRACT NO. 64H11	
		DATE -	REVISED -		SCALE: SHEET OF SHEETS STA. TO STA.			ILLINOIS FED. AID PROJECT	

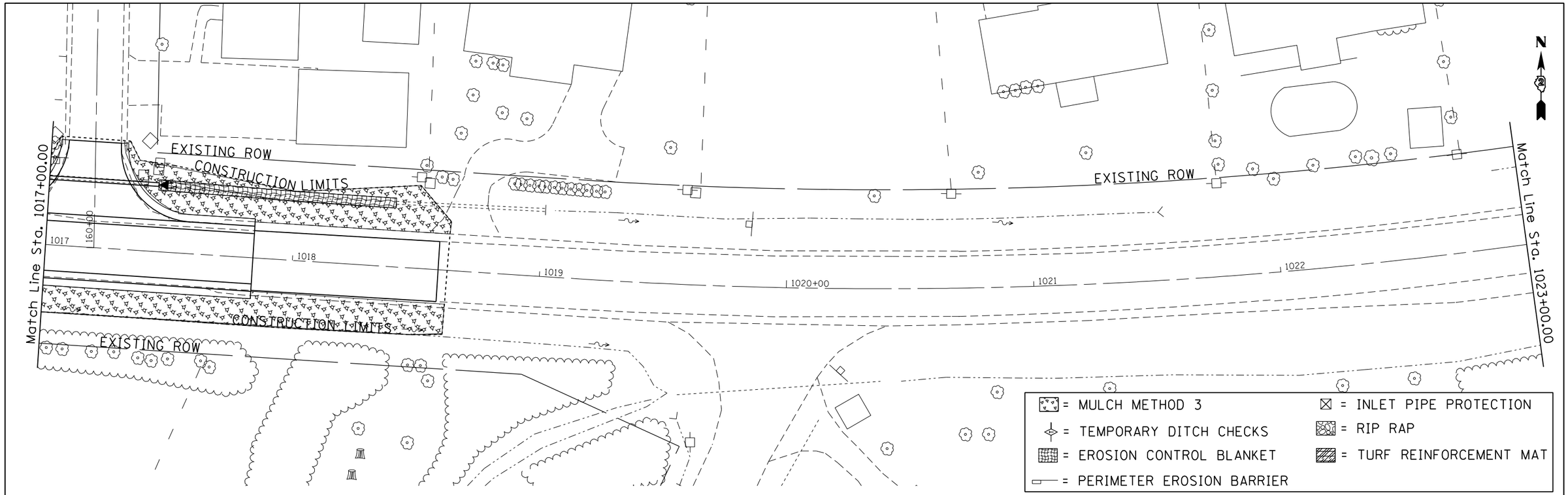

FILE NAME = c:\pw_work\pwidot\grantpm\d0261271\D207411-sht-eros.dgn	USER NAME = grantpm	DESIGNED -	REVISED -	STATE OF ILLINOIS DEPARTMENT OF TRANSPORTATION	IL ROUTE 92 EROSION CONTROL SHEETS	F.A.P. RTE.	SECTION	COUNTY	TOTAL SHEETS	SHEET NO.
		DRAWN -	REVISED -			599	(83MFT & 103MFT)W	ROCK ISLAND	340	125
	PLOT SCALE = 40.0000 ' / in.	CHECKED -	REVISED -					CONTRACT NO. 64H11		
	PLOT DATE = Wed Mar 20 11:55:56 2013	DATE -	REVISED -		SCALE: SHEET OF SHEETS STA. TO STA.		ILLINOIS	FED. AID PROJECT		

PAVEMENT ELEVATIONS

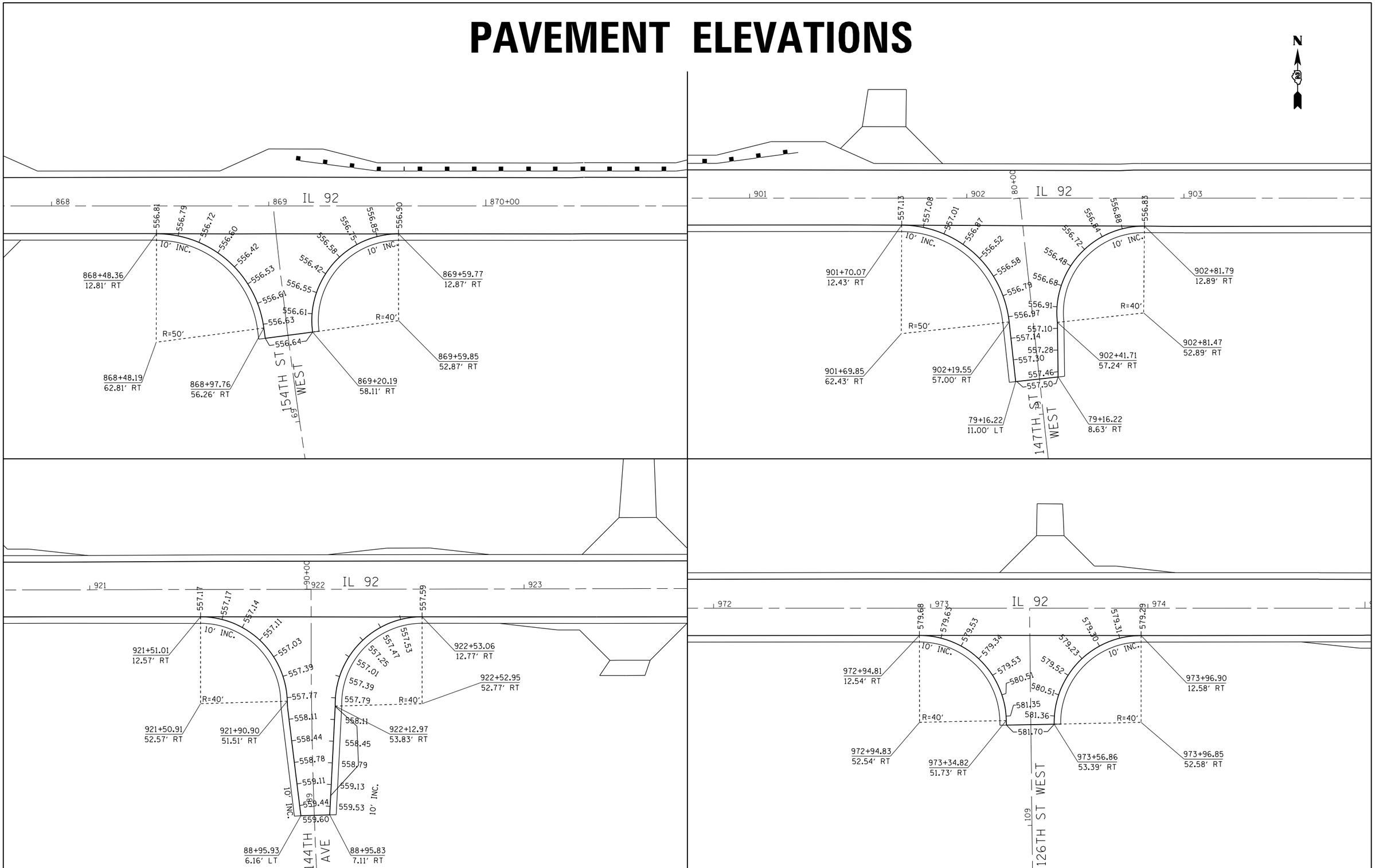

FILE NAME =	USER NAME = grantpm	DESIGNED -	REVISED -
c:\pw_work\pwidot\grantpm\d0261271\D207411-sht-elev.dgn		DRAWN -	REVISED -
	PLOT SCALE = 40.0000 ' / in.	CHECKED -	REVISED -
Default	PLOT DATE = Wed Mar 20 11:56:36 2013	DATE -	REVISED -

STATE OF ILLINOIS
DEPARTMENT OF TRANSPORTATION

PAVEMENT ELEVATIONS

SCALE: | SHEET OF SHEETS | STA. TO STA.

F.A.P. RTE.	SECTION	COUNTY	TOTAL SHEETS	SHEET NO.
599	(83MFT & 103MFT)W	ROCK ISLAND	340	126

CONTRACT NO. 64H11

ILLINOIS FED. AID PROJECT

PAVEMENT ELEVATIONS

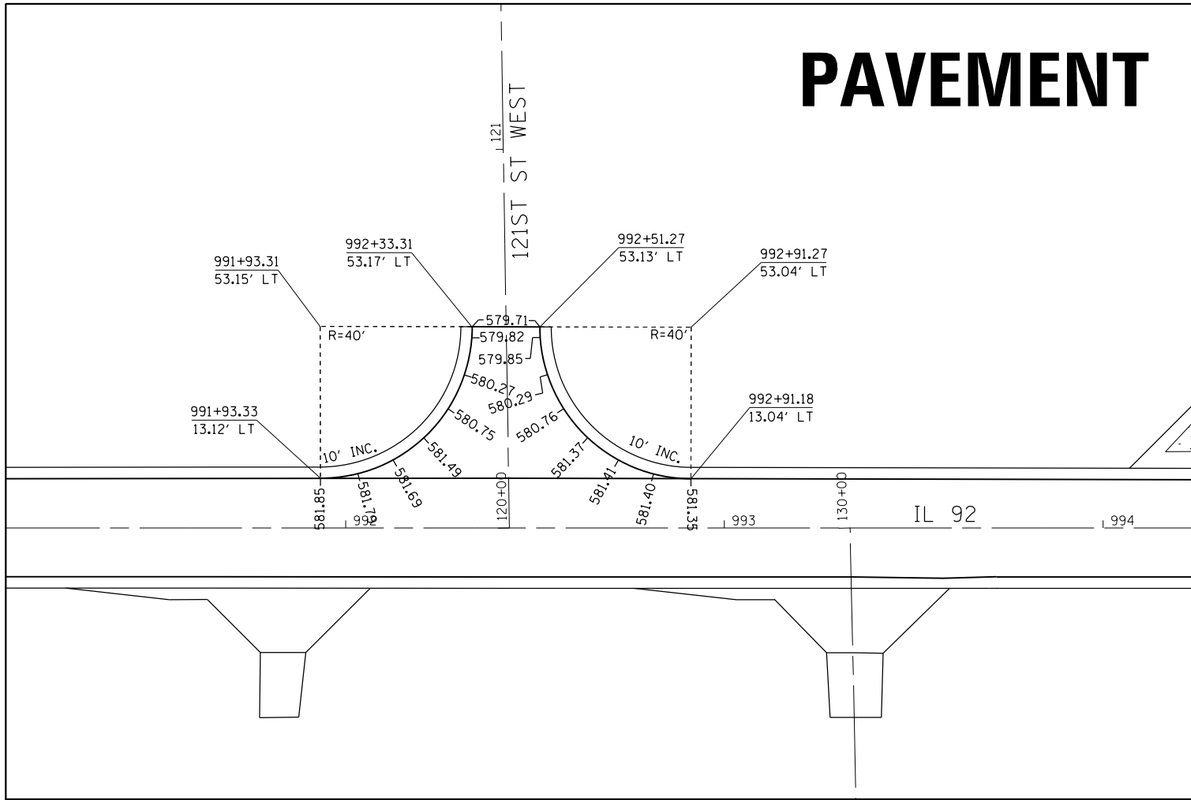

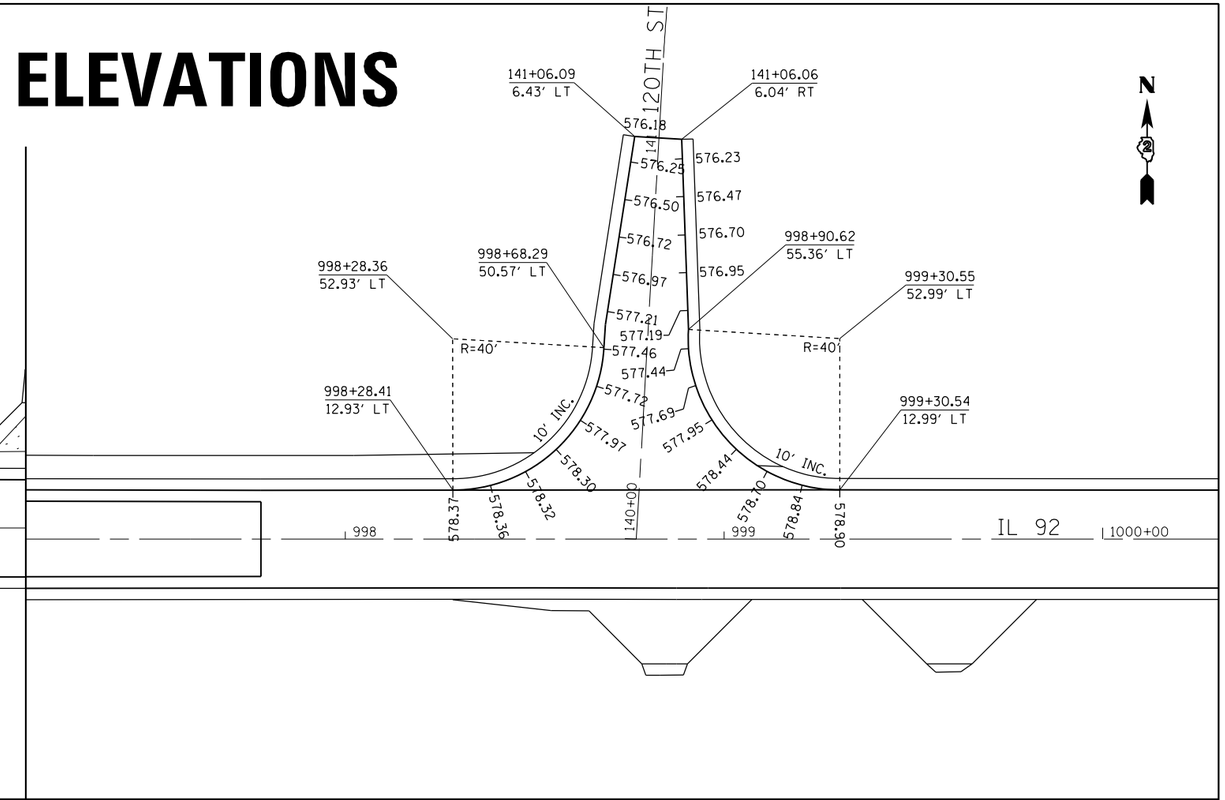

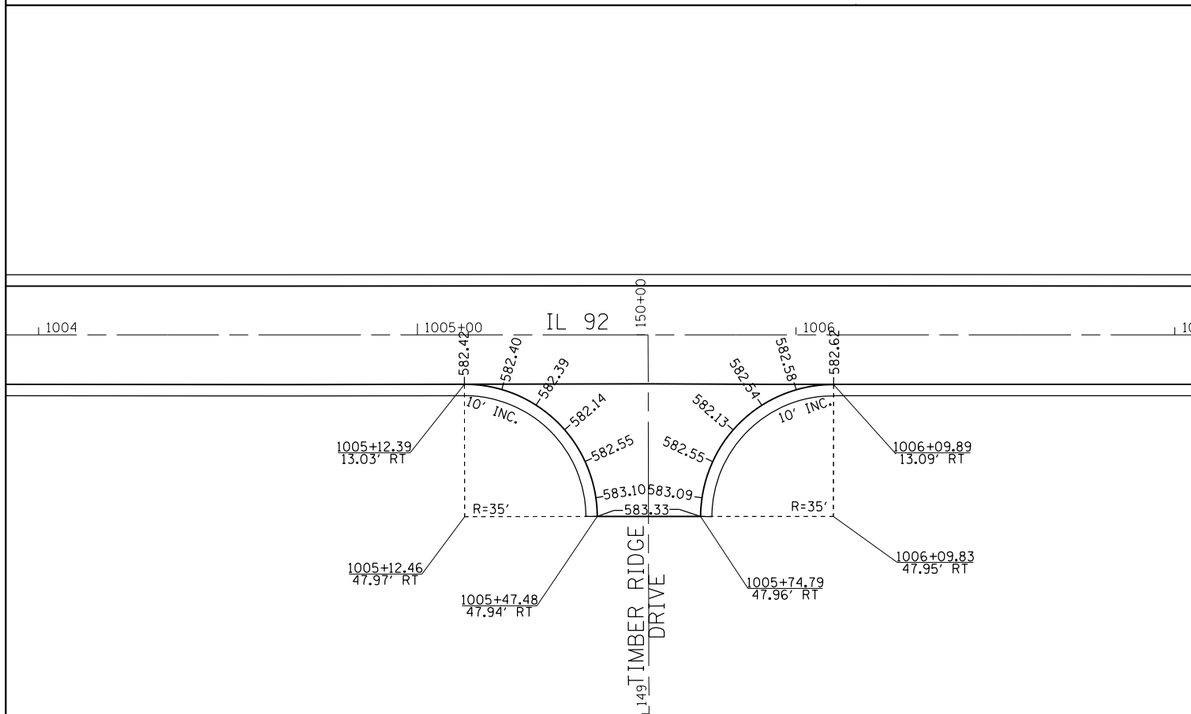

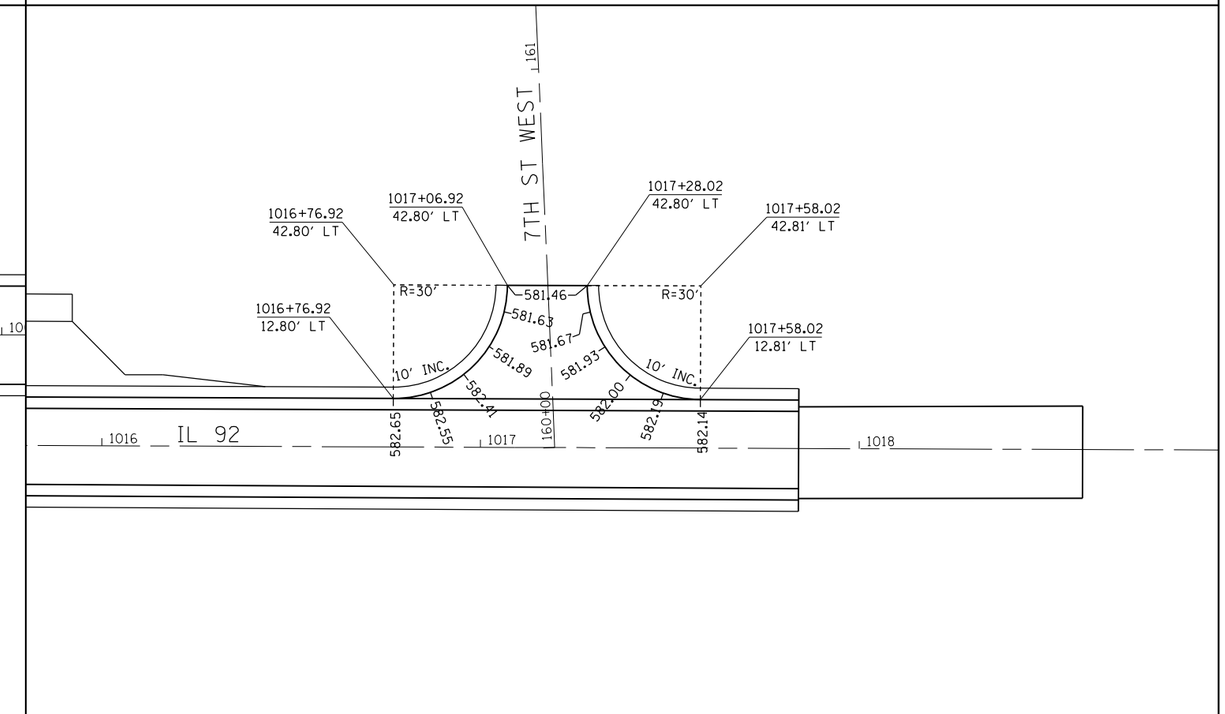

FILE NAME = c:\pw_work\pwidot\grantpm\d0261271\D207411-sht-elev.dgn	USER NAME = grantpm	DESIGNED -	REVISED -
		DRAWN -	REVISED -
	PLOT SCALE = 40.0000 ' / in.	CHECKED -	REVISED -
Default	PLOT DATE = Wed Mar 20 11:56:57 2013	DATE -	REVISED -

STATE OF ILLINOIS
DEPARTMENT OF TRANSPORTATION

PAVEMENT ELEVATIONS

SCALE: | SHEET OF SHEETS | STA. TO STA.

F.A.P. RTE.	SECTION	COUNTY	TOTAL SHEETS	SHEET NO.
599	(83MFT & 103MFT)W	ROCK ISLAND	340	127
		CONTRACT NO. 64H11		
		ILLINOIS FED. AID PROJECT		

GUARDRAIL DETAILS

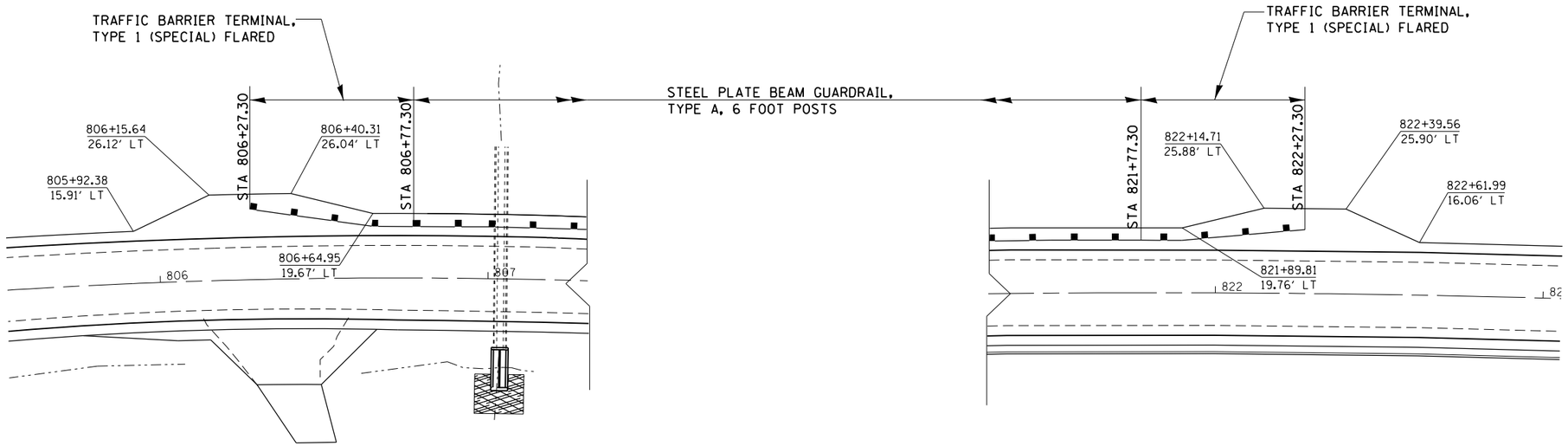

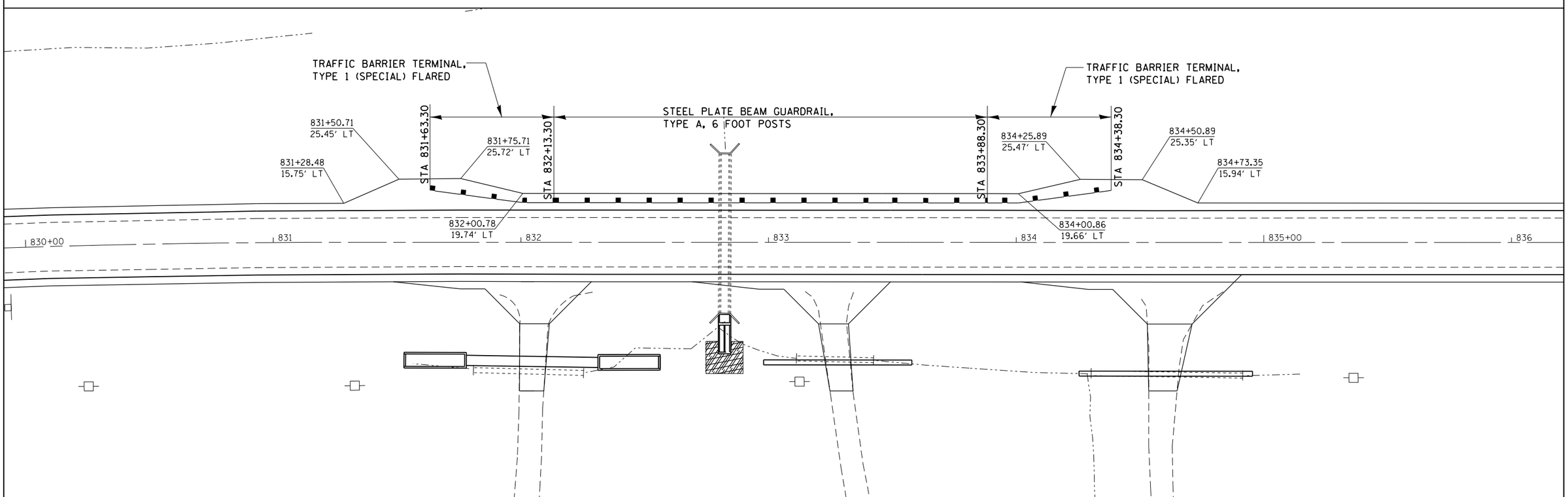

FILE NAME = c:\pw_work\pwidot\grantpm\d0261271\D207411-sht-guardrail.dgn	USER NAME = grantpm	DESIGNED -	REVISED -	STATE OF ILLINOIS DEPARTMENT OF TRANSPORTATION	GUARDRAIL DETAILS	F.A.P. RTE.	SECTION	COUNTY	TOTAL SHEETS / SHEET NO.
	PLOT SCALE = 40.0000 ' / in.	DRAWN -	REVISED -			599	(83MFT & 103MFT)W	ROCK ISLAND	340 / 128
Default	PLOT DATE = Wed Mar 20 11:57:58 2013	CHECKED -	REVISED -					CONTRACT NO. 64H11	
		DATE -	REVISED -		SCALE: SHEET OF SHEETS STA. TO STA.		ILLINOIS FED. AID PROJECT		

GUARDRAIL DETAILS

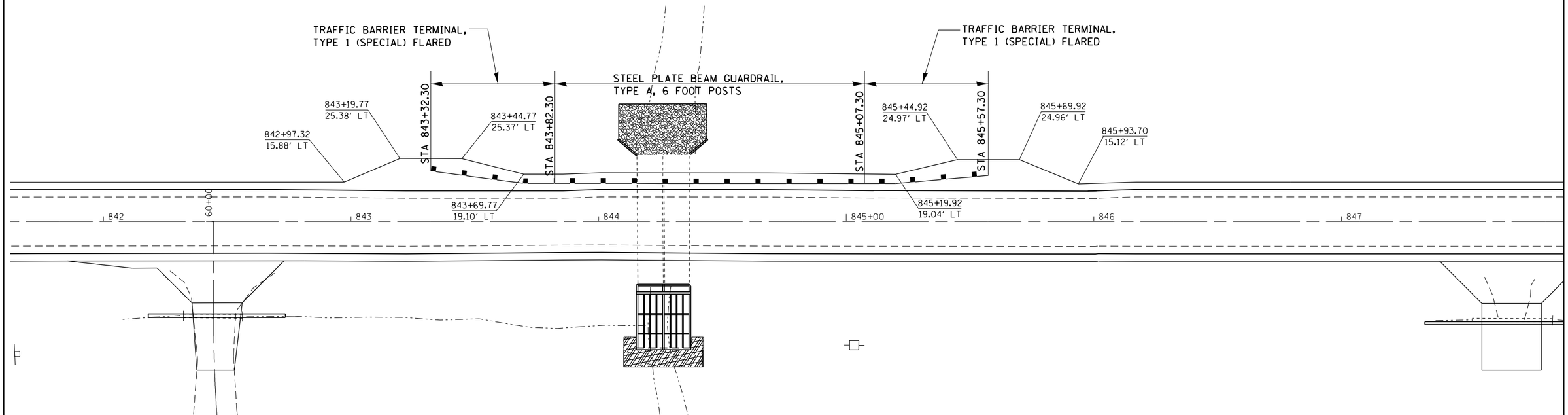

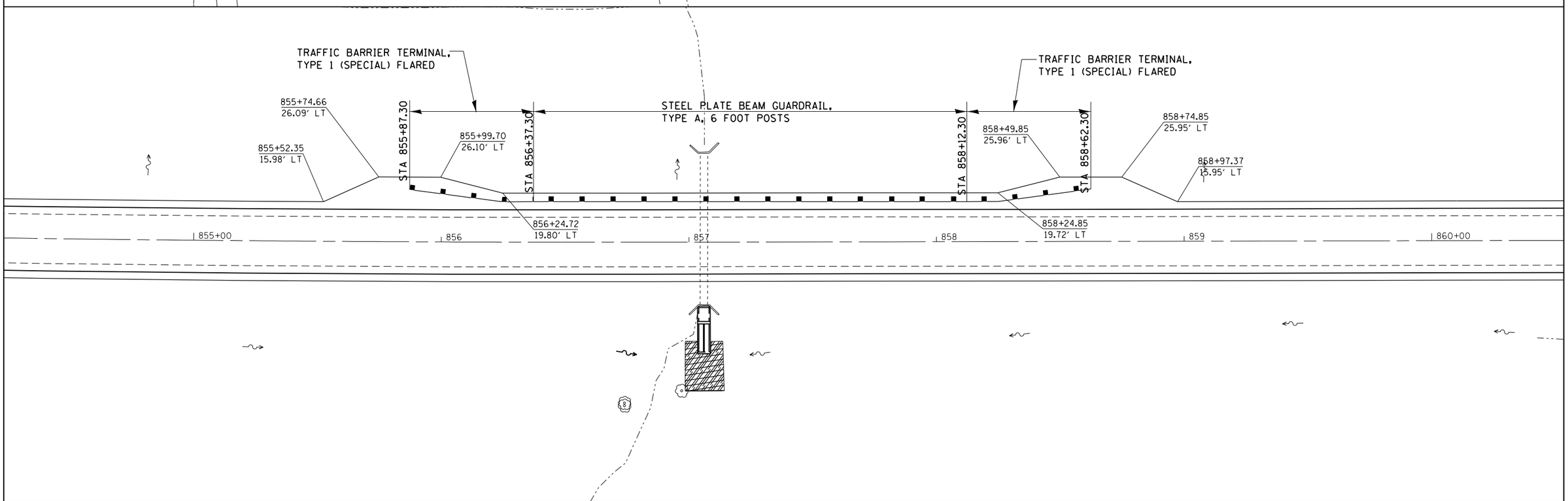

FILE NAME = c:\pw_work\pwidot\grantpm\d0261271\D207411-sht-guardrail.dgn	USER NAME = grantpm	DESIGNED -	REVISED -	STATE OF ILLINOIS DEPARTMENT OF TRANSPORTATION	GUARDRAIL DETAILS	F.A.P. RTE. 599	SECTION (83MFT & 103MFT)W	COUNTY ROCK ISLAND	TOTAL SHEETS 340	SHEET NO. 129
	PLOT SCALE = 40.0000 ' / in.	DRAWN -	REVISED -					CONTRACT NO. 64H11		
Default	PLOT DATE = Wed Mar 20 11:58:10 2013	CHECKED -	REVISED -		SCALE:	SHEET OF SHEETS	STA. TO STA.	ILLINOIS FED. AID PROJECT		
		DATE -	REVISED -							

GUARDRAIL DETAILS

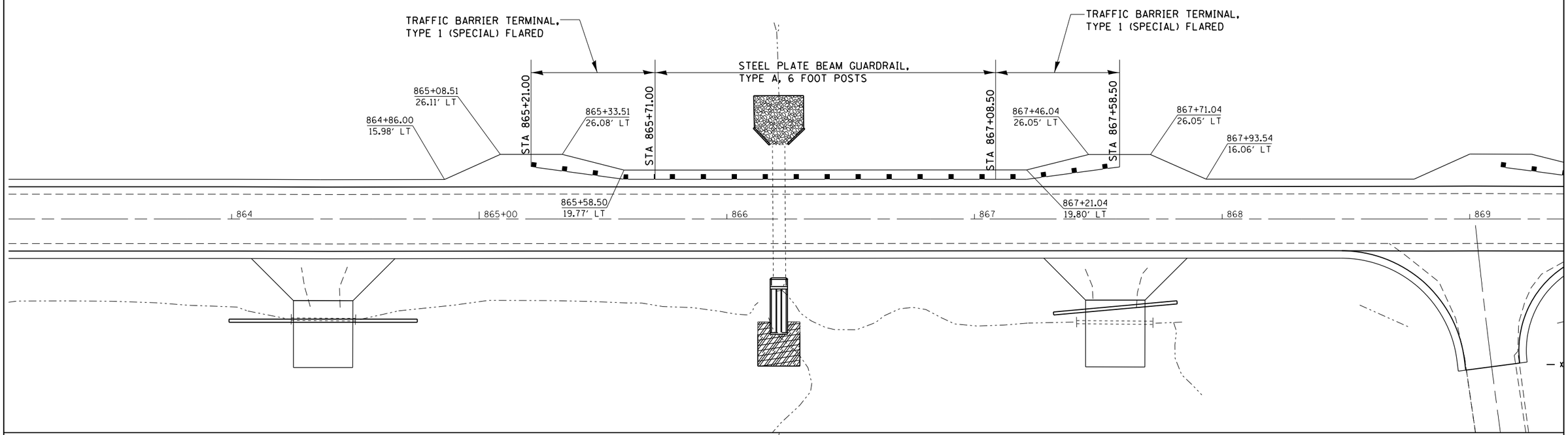

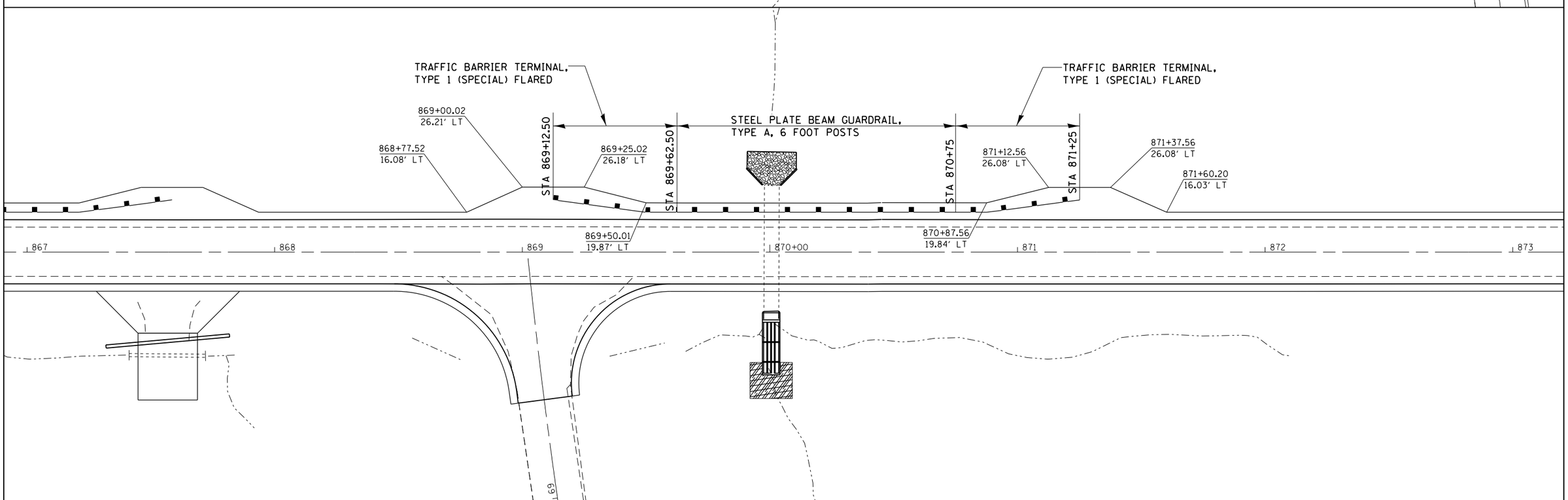

FILE NAME = c:\pw_work\pwidot\grantpm\d0261271\D207411-sht-guardrail.dgn	USER NAME = grantpm	DESIGNED -	REVISED -	STATE OF ILLINOIS DEPARTMENT OF TRANSPORTATION	GUARDRAIL DETAILS	F.A.P. RTE.	SECTION	COUNTY	TOTAL SHEETS / SHEET NO.
	PLOT SCALE = 40.0000 ' / in.	DRAWN -	REVISED -			599	(83MFT & 103MFT)W	ROCK ISLAND	340 / 130
	PLOT DATE = Wed Mar 20 11:58:23 2013	CHECKED -	REVISED -					CONTRACT NO. 64H11	
Default		DATE -	REVISED -		SCALE: SHEET OF SHEETS STA. TO STA.		ILLINOIS FED. AID PROJECT		

GUARDRAIL DETAILS

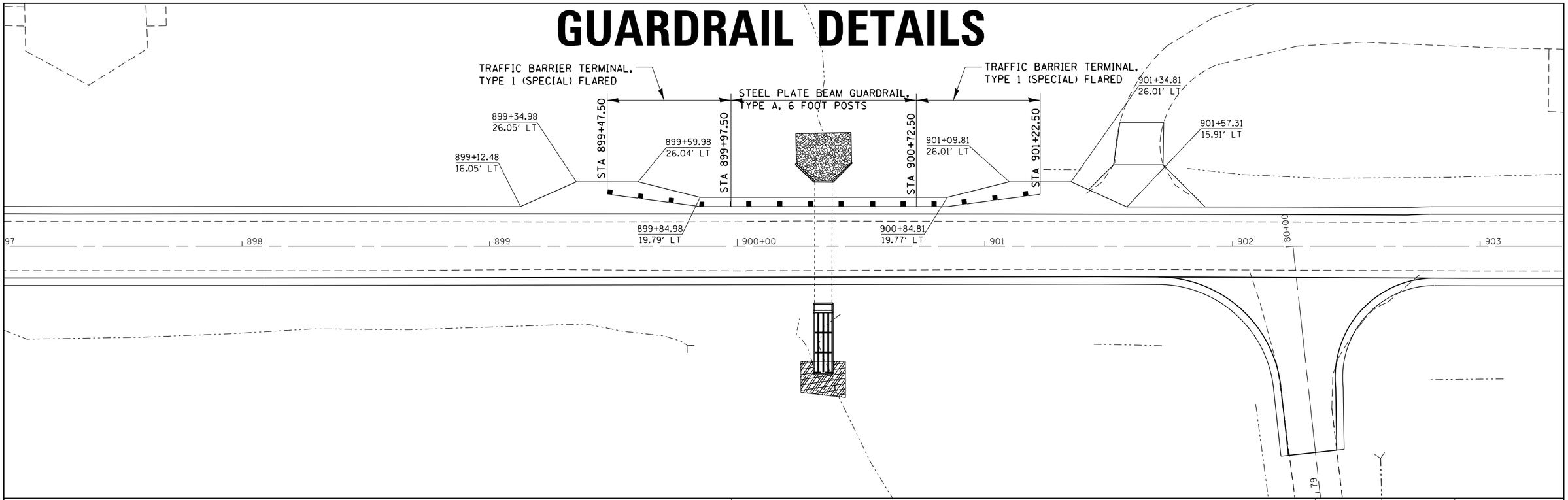

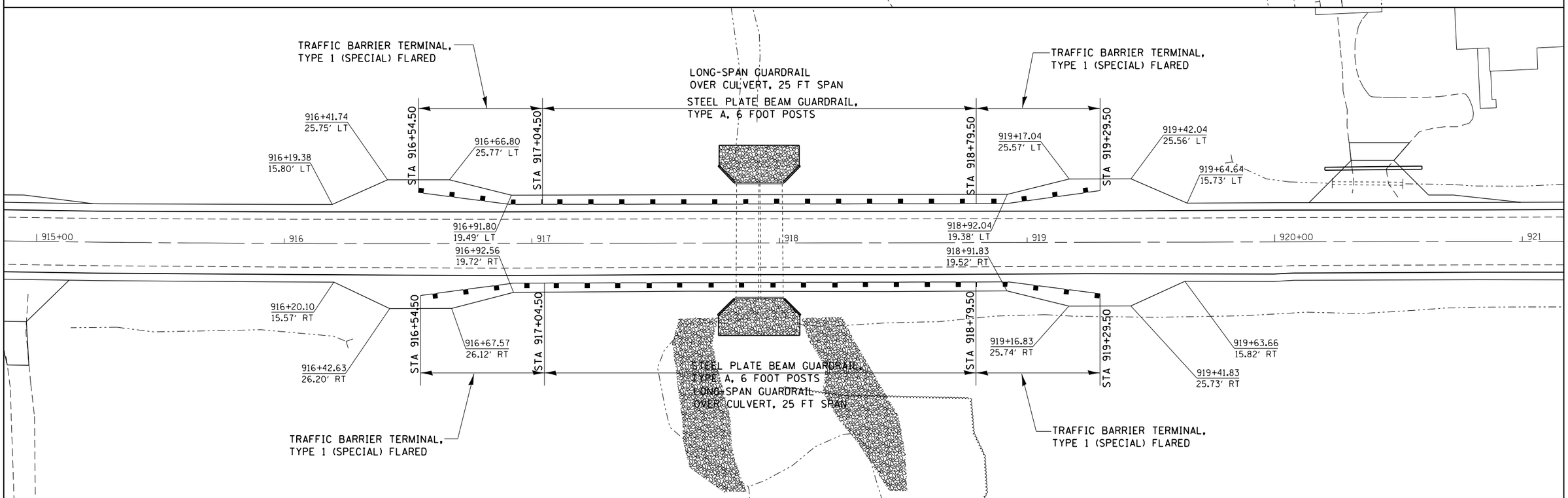

FILE NAME = c:\pw_work\pwidot\grantpm\d0261271\D207411-sht-guardrail.dgn	USER NAME = grantpm	DESIGNED -	REVISED -	STATE OF ILLINOIS DEPARTMENT OF TRANSPORTATION	GUARDRAIL DETAILS	F.A.P. RTE.	SECTION	COUNTY	TOTAL SHEETS / SHEET NO.
		DRAWN -	REVISED -			599	(83MFT & 103MFT)W	ROCK ISLAND	340 / 131
	PLOT SCALE = 40.0000 ' / in.	CHECKED -	REVISED -					CONTRACT NO. 64H11	
Default	PLOT DATE = Wed Mar 20 11:58:36 2013	DATE -	REVISED -		SCALE: SHEET OF SHEETS STA. TO STA.		ILLINOIS FED. AID PROJECT		

GUARDRAIL DETAILS

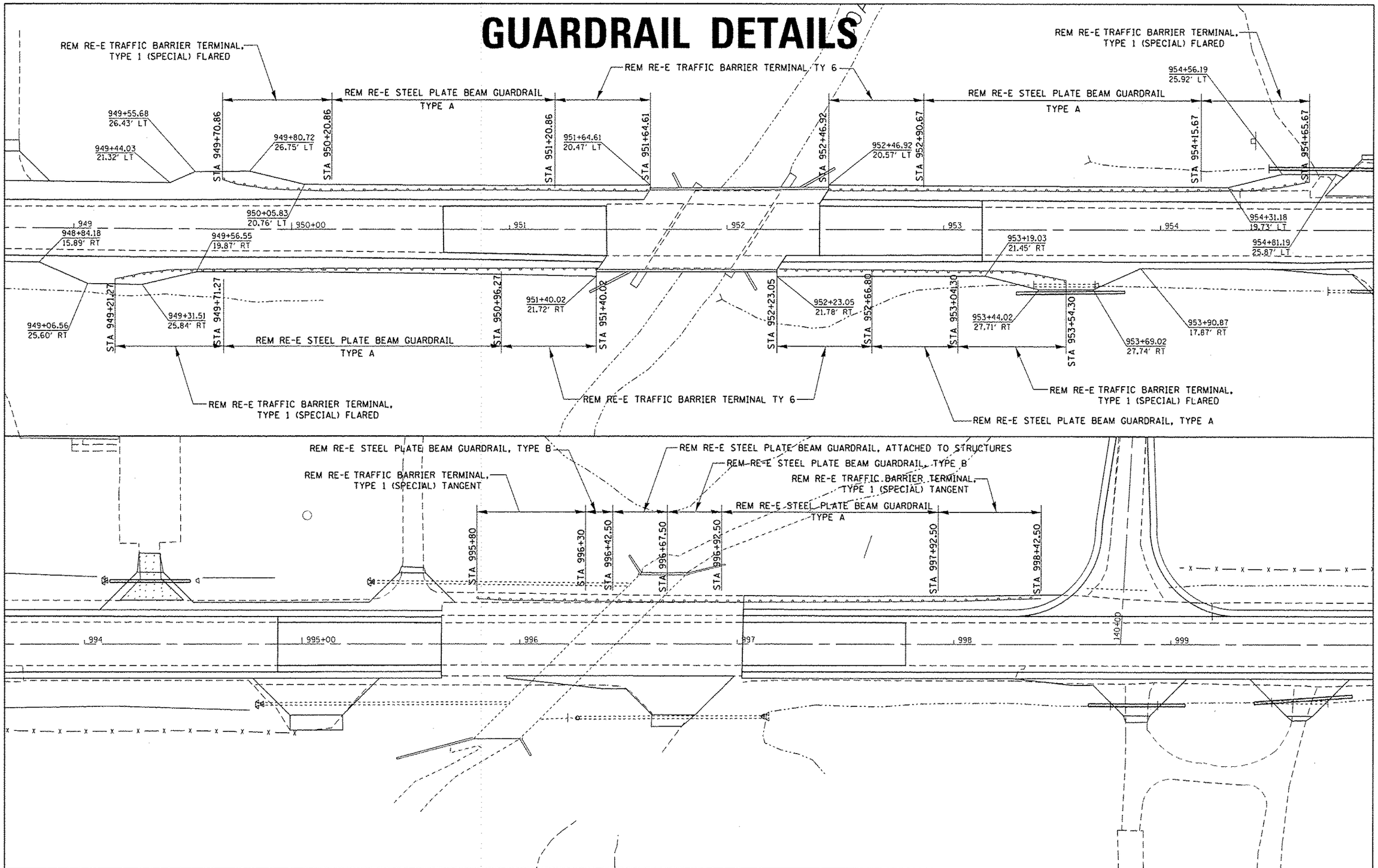

FILE NAME = c:\pw_work\pwidot\grantpm\d0261271\D207011-sht-guardrail.dgn	USER NAME = grantpm	DESIGNED -	REVISED -	STATE OF ILLINOIS DEPARTMENT OF TRANSPORTATION	GUARDRAIL DETAILS	F.A.P. RTE.	SECTION	COUNTY	TOTAL SHEETS	SHEET NO.
	PLOT SCALE = 40.0000 ' / in.	DRAWN -	REVISED -			599	(83MFT & 103MFT)W	ROCK ISLAND	340	132
	PLOT DATE = Mon May 20 10:50:00 2013	CHECKED -	REVISED -					CONTRACT NO. 64H11		
Default		DATE -	REVISED -		SCALE: SHEET OF SHEETS STA. TO STA.			ILLINOIS FED. AID PROJECT		

Existing Structure: Existing culvert is a 36" ϕ reinforced concrete culvert pipe with 30" ϕ plastic liner pipe with 28½" ϕ inside diameter. The exisitng culvert is approximately 62'-1" out to out headwalls. The end sections are reinforced concrete end sections that consist of headwall, wingwalls and apron. The upstream end of the existing culvert will be extended with a concrete end section. One lane of traffic to be maintained at all times utilizing staged construction.

No salvage.

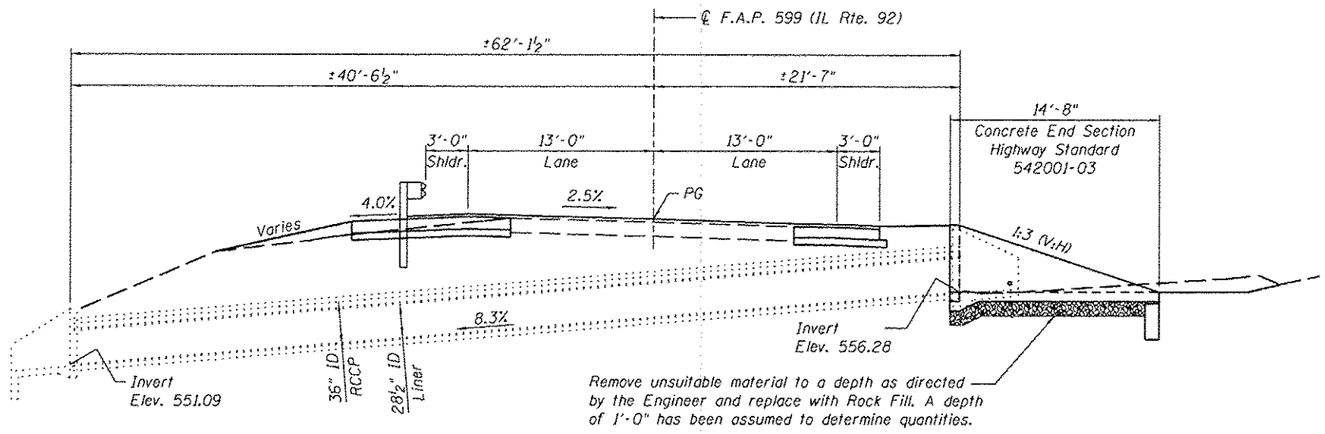

LONGITUDINAL SECTION

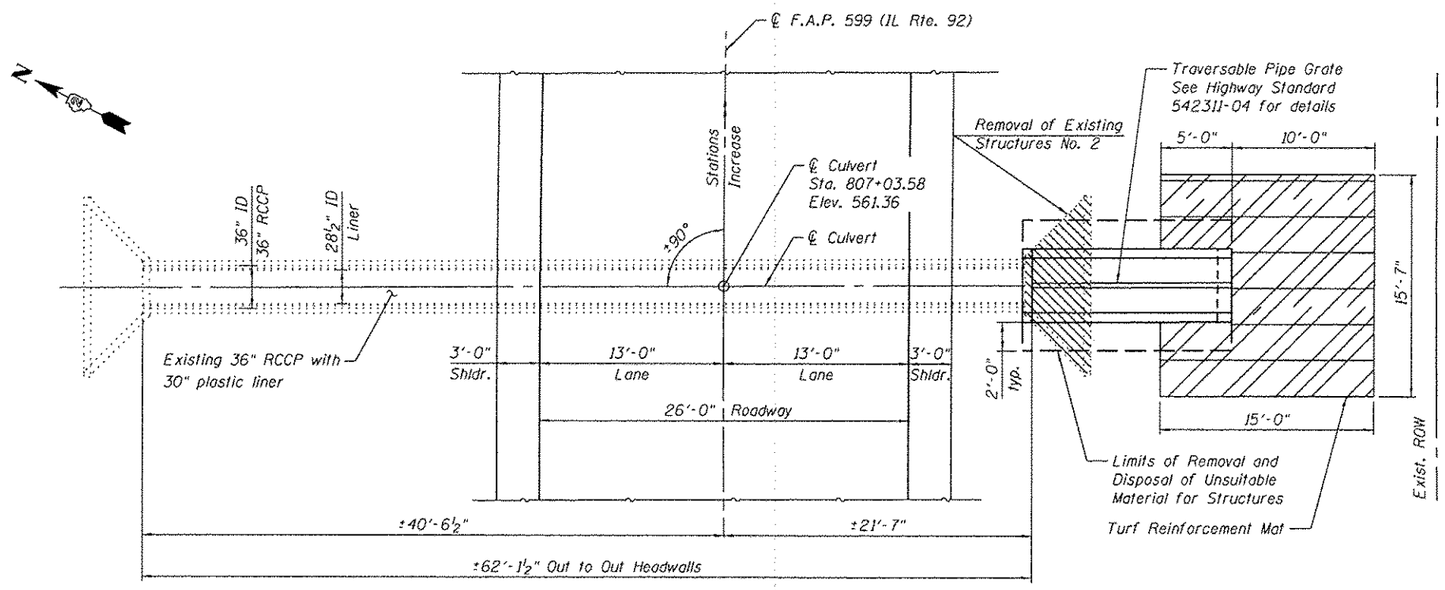

PLAN

GENERAL NOTES

1. Plan dimensions and details have been taken from existing plans or survey/field checks. As such, these dimensions and details are subject to nominal construction variations. The Contractor shall field verify existing dimensions and details affecting new construction and make necessary approved adjustments prior to construction or ordering of materials. Such variations shall not be cause for additional compensation for a change in scope of the work, however, the Contractor will be paid for the quantity actually furnished at the unit price bid for the work.

TOTAL BILL OF MATERIAL

ITEM	UNIT	TOTAL
Turf Reinforcement Mat	Sq. Yd.	23
Removal of Existing Structures No. 2	Each	1
Removal And Disposal Of Unsuitable Material For Structures	Cu. Yd.	6
Traversable Pipe Grate	Foot	12.8
Concrete End Section, Standard 542001, 36", 1:3	Each	1
Rock Fill	Ton	10

DESIGN SPECIFICATIONS

2002 AASHTO Bridge Design Specifications

DESIGN STRESSES

FIELD UNITS

f'c = 3,500 psi
fy = 60,000 psi (Reinforcement)

LICENSED STRUCTURAL ENGINEER
DAVID L. SMOOT
081 - 005861
ST. CHARLES
ILLINOIS
STATE OF ILLINOIS

David L. Smoot
Signature
Date: March 13, 2013
License Expires 11/30/2014

GENERAL PLAN & ELEVATION
ILLINOIS ROUTE 92
F.A.P. RTE 599 - SEC. (83 MFT & 103MFT)W
ROCK ISLAND COUNTY
STATION 807+03.58

FILE NAME = W:\Projects\2818\182128 PTB 157-29\cadd\Structural\Dgn\WD #3 IL 92 Culverts\Station807+03.58\Final Submittal 13\8328\807+03.58-64H11-081-GPE.dgn

WILLS BURKE KELSEY ASSOCIATES LTD. 116 West Main Street, Suite 201 St. Charles, Illinois 60174	USER NAME = nparris	DESIGNED - HLF	REVISED -
		CHECKED - DLS	REVISED -
	PLOT SCALE =	DRAWN - HLF	REVISED -
	PLOT DATE = 3/21/2013	CHECKED - DLS	REVISED -

STATE OF ILLINOIS
DEPARTMENT OF TRANSPORTATION

GENERAL PLAN & ELEVATION
STA. 807+03.58
SHEET NO. 1 OF 1 SHEETS

F.A.P. RTE.	SECTION	COUNTY	TOTAL SHEETS	SHEET NO.
599	(83MFT & 103MFT)W	ROCK ISLAND	340	133
		CONTRACT NO. 64H11		
FED. ROAD DIST. NO.	ILLINOIS	FED. AID PROJECT		

Existing Structure: Existing culvert is a 36" corrugated metal pipe with a nominal 30" ID plastic liner pipe. The existing culvert is approximately 60'-0" out to out headwalls. The end sections are reinforced concrete end sections that consist of headwall, apron and wingwalls. The upstream end of the existing culvert will be extended with a concrete end section and drop box. One lane of traffic to be maintained at all times utilizing staged construction.

No salvage.

DESIGN SPECIFICATIONS

2002 AASHTO Bridge Design Specifications

DESIGN STRESSES

FIELD UNITS

f'c = 3,500 psi
fy = 60,000 psi (Reinforcement)

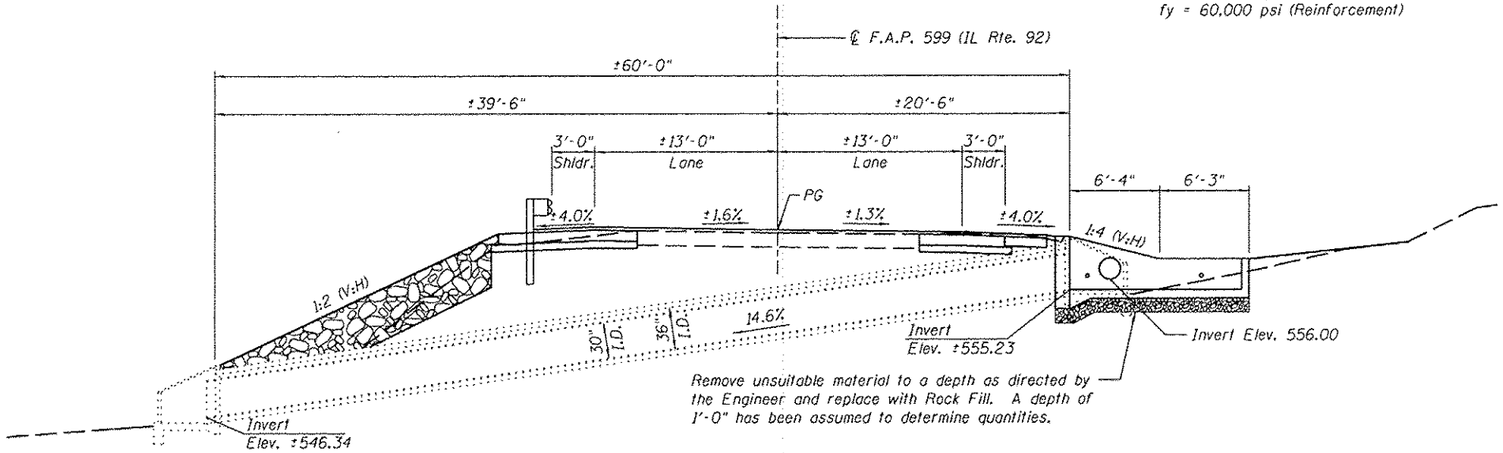

LONGITUDINAL SECTION

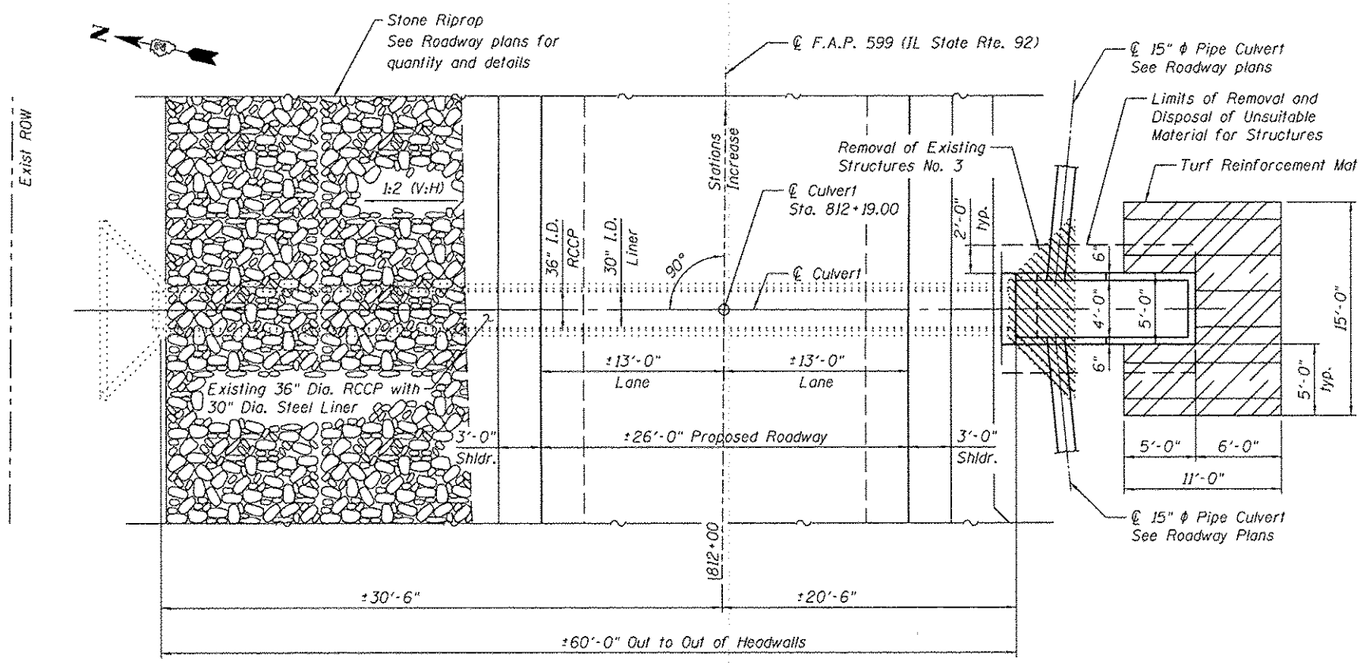

PLAN

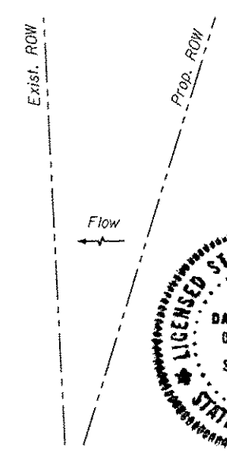

GENERAL NOTES

1. Plan dimensions and details have been taken from existing plans or survey/field checks. As such, these dimensions and details are subject to nominal construction variations. The Contractor shall field verify existing dimensions and details affecting new construction and make necessary approved adjustments prior to construction or ordering of materials. Such variations shall not be cause for additional compensation for a change in scope of the work, however, the Contractor will be paid for the quantity actually furnished at the unit price bid for the work.
2. The barrel slab and walls shall be poured monolithically with the drop box.
3. All exposed concrete edges shall be chamfered $^3/_4$" unless otherwise noted.
4. All construction joints shall be bonded.
5. The contract unit price "Each" for Box Culvert End Sections of the culvert end section specified shall include the Concrete Box Culverts, Reinforcement Bars, Earth Excavation where required and necessary grading to fit the structures as shown, or to the slope.
6. This work shall be done according to the applicable portion of of 501, 503, 505, 508, 540 and 584 of the Standard Specifications.
7. Drainage holes shall conform to the requirements of Article 503.11 of the Standard Specifications.
8. A precast option will not be allowed at this site.

TOTAL BILL OF MATERIAL

ITEM	UNIT	TOTAL
Turf Reinforcement Mat	Sq. Yd.	16
Removal of Existing Structures No. 3	Each	1
Removal And Disposal Of Unsuitable Material For Structures	Cu. Yd.	5
Traversable Pipe Grate	Foot	26.5
Box Culvert End Section, Culvert No. 16	Each	1
Rock Fill	Ton	9

INDEX OF SHEETS

1. General Plan & Elevation
2. Box Culvert End Section with Drop Box
3. Box Culvert End Section with Drop Box Details
4. Traverasable Steel Pipe System with Drop Box

LICENSED STRUCTURAL ENGINEER
DAVID L. SMOOT
081-005861
ST. CHARLES
ILLINOIS
STATE OF ILLINOIS

David L. Smoot
Signature
Date: March 13, 2013
License Expires 11/30/2014

GENERAL PLAN & ELEVATION
ILLINOIS ROUTE 92
F.A.P. RTE 599 - SEC. (83MFT & 103MFT)W
ROCK ISLAND COUNTY
STATION 812+19.00

WILLS BURKE KELSEY ASSOCIATES LTD.
116 West Main Street, Suite 201
St. Charles, Illinois 60174

USER NAME = rpeters	DESIGNED - HLF	REVISED -	
	CHECKED - DLS	REVISED -	
PLOT SCALE =	DRAWN - HLF	REVISED -	
PLOT DATE = 3/21/2013	CHECKED - DLS	REVISED -	

STATE OF ILLINOIS
DEPARTMENT OF TRANSPORTATION

GENERAL PLAN & ELEVATION
STA. 812+19.00
SHEET NO. 1 OF 4 SHEETS

F.A.P. RTE.	SECTION	COUNTY	TOTAL SHEETS	SHEET NO.
599	(83MFT & 103MFT)W	ROCK ISLAND	340	134
		CONTRACT NO. 64H11		
FED. ROAD DIST. NO.	ILLINOIS	FED. AID PROJECT		

FILE NAME = W:\Projects\2818\28128 PTB 157\25\cadd\Structural\Dgn\W0 +3 IL 92 Culvert\Status812+19.28\Final Submittal 13.28228\812+19.28-64H11-281-CPE.dgn

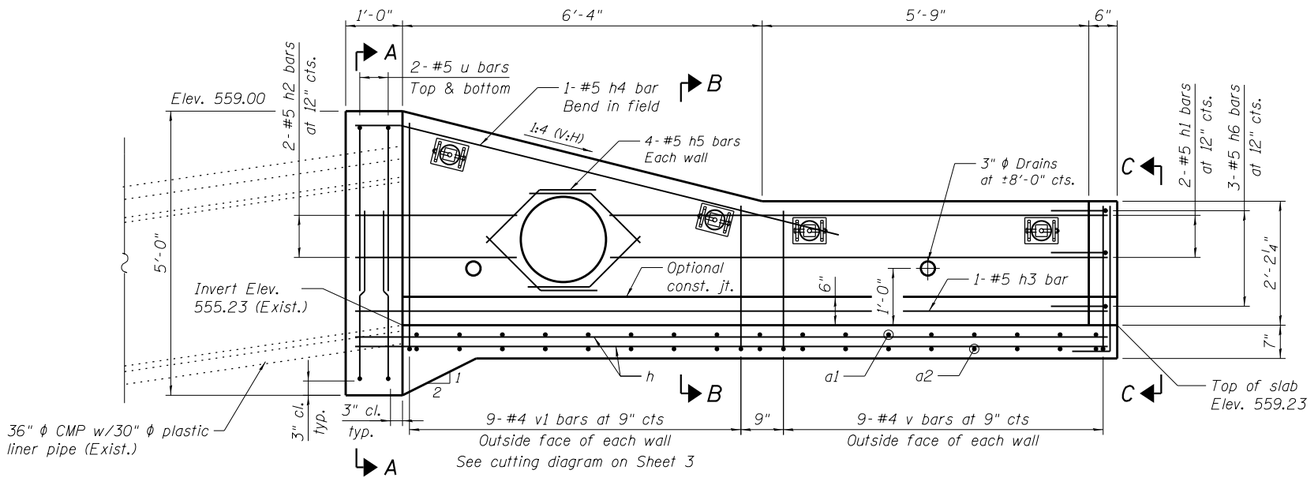

LONGITUDINAL SECTION

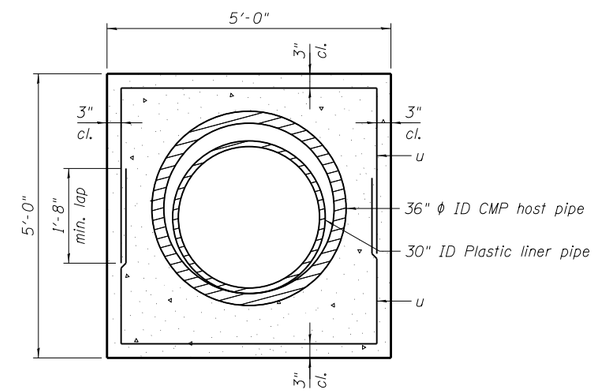

SECTION A-A

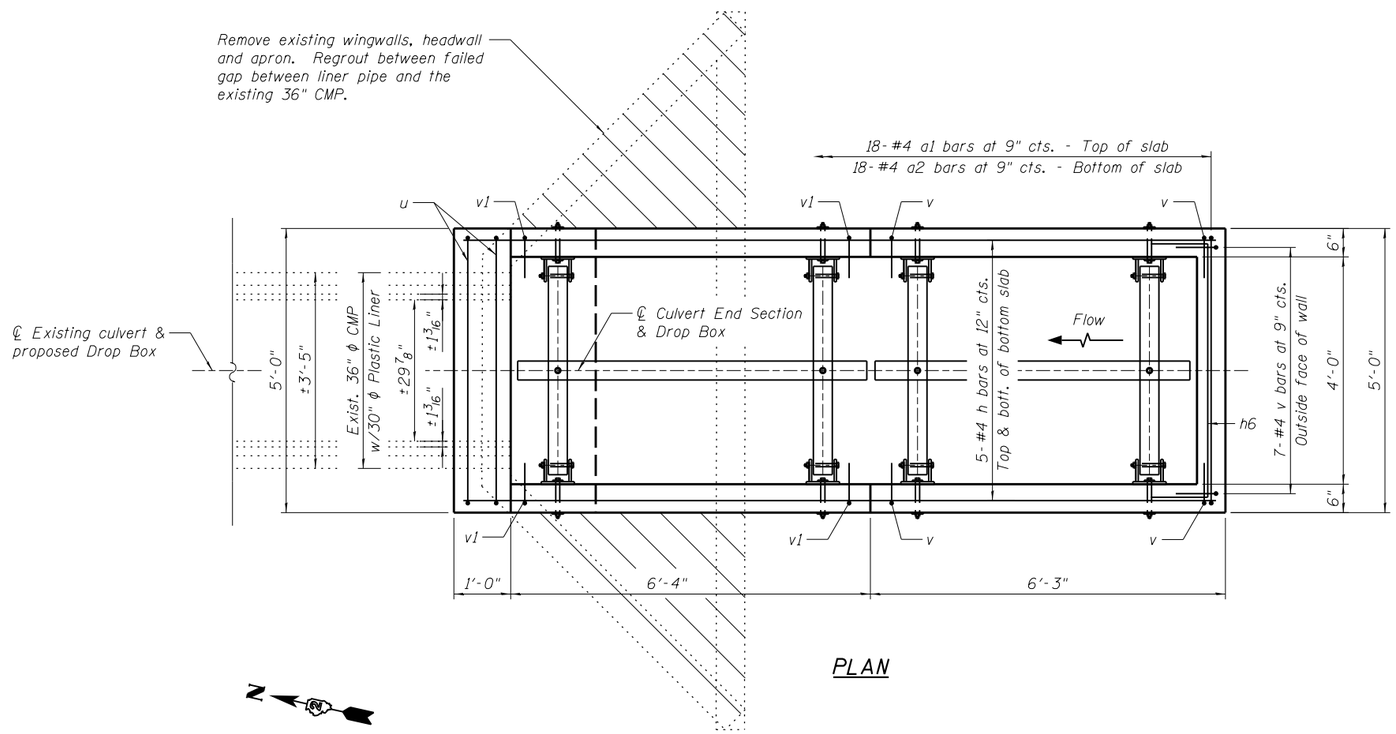

PLAN

FILE NAME = W:\Projects\2010\100120 PTB 157\25\cadd\Structural\Dgn\WO #3 IL 92 Culverts\Station812+19.00\Final Submittal 13\B220\812+19.00-64H11-002-DropBox.dgn

WILLS BURKE KELSEY ASSOCIATES LTD. 116 West Main Street, Suite 201 St. Charles, Illinois 60174	USER NAME = hferstl	DESIGNED - DLS	REVISED -	STATE OF ILLINOIS DEPARTMENT OF TRANSPORTATION	BOX CULVERT END SECTION WITH DROP BOX STA. 812+19.00 RT.	F.A.P. RTE.	SECTION	COUNTY	TOTAL SHEETS / SHEET NO.
		CHECKED - AEU	REVISED -			599	(83MFT & 103MFT)W	ROCK ISLAND	340 / 135
	PLOT SCALE =	DRAWN - DLS	REVISED -					CONTRACT NO. 64H11	
	PLOT DATE = 3/20/2013	CHECKED - AEU	REVISED -		SHEET NO. 2 OF 4 SHEETS	FED. ROAD DIST. NO.	ILLINOIS	FED. AID PROJECT	

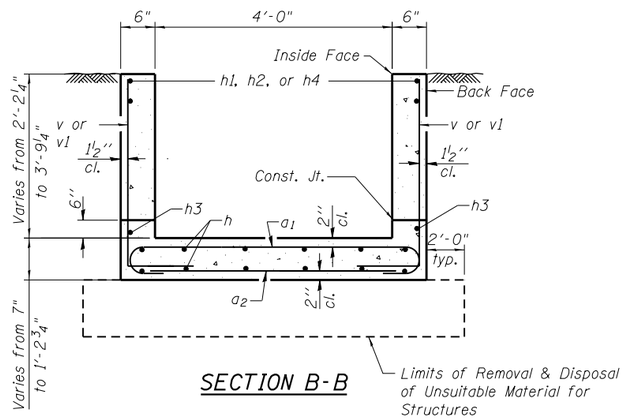

SECTION B-B

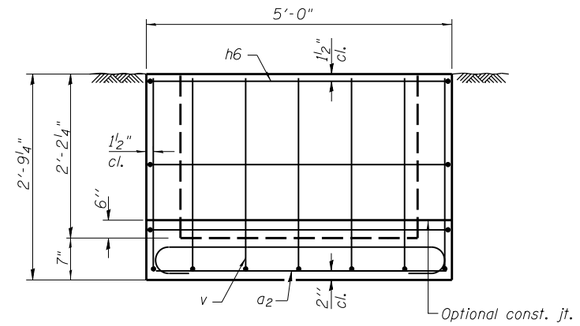

VIEW C-C

BILL OF MATERIAL

(For Information Only)

Bar	No.	Size	Length	Shape
a1	18	#4	5'-8"	
a2	18	#4	4'-8"	
h	10	#4	13'-3"	
h1	4	#5	8'-9"	
h2	4	#5	2'-10"	
h3	2	#5	13'-3"	
h4	2	#5	8'-9"	
h5	8	#5	2'-4"	
h6	3	#5	6'-8"	
u	4	#5	10'-8"	
v	25	#4	3'-1"	
v1	9	#4	7'-10"	

Description	Unit	Quantity
Concrete Box Culverts	Cu. Yd.	3.6
Reinforcement Bars	Pound	500

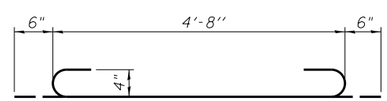

BAR a1

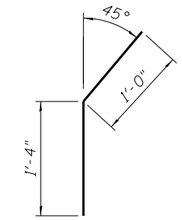

BAR h5

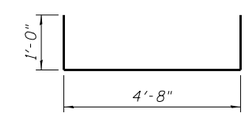

BAR h6

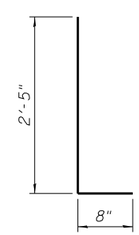

BAR v

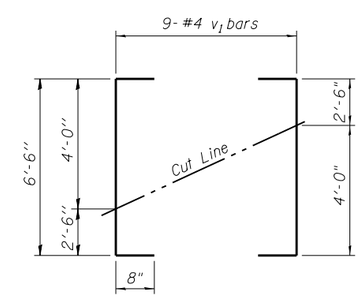

BAR v1
FIELD CUTTING DIAGRAM

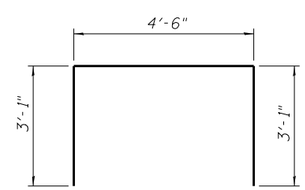

BAR u

FILE NAME = W:\Projects\2010\100120 PTB 157\25\cadd\Structural\Dgn\WO #3 IL 92 Culverts\Station812+19.00\Final Submittal 13.0320\812+19.00-64H11-003-Drop Box Details.dgn

WILLS BURKE KELSEY ASSOCIATES LTD.
116 West Main Street, Suite 201
St. Charles, Illinois 60174

USER NAME = hferstl	DESIGNED - HLF	REVISED -	
	CHECKED - DLS	REVISED -	
PLOT SCALE =	DRAWN - HLF	REVISED -	
PLOT DATE = 3/20/2013	CHECKED - DLS	REVISED -	

STATE OF ILLINOIS
DEPARTMENT OF TRANSPORTATION

BOX CULVERT END SECTION WITH DROP BOX DETAILS
STA. 812+19.00 RT.

SHEET NO. 3 OF 4 SHEETS

F.A.P. RTE.	SECTION	COUNTY	TOTAL SHEETS	SHEET NO.
599	(83MFT & 103MFT)W	ROCK ISLAND	340	136
		CONTRACT NO. 64H11		
FED. ROAD DIST. NO.	ILLINOIS	FED. AID PROJECT		

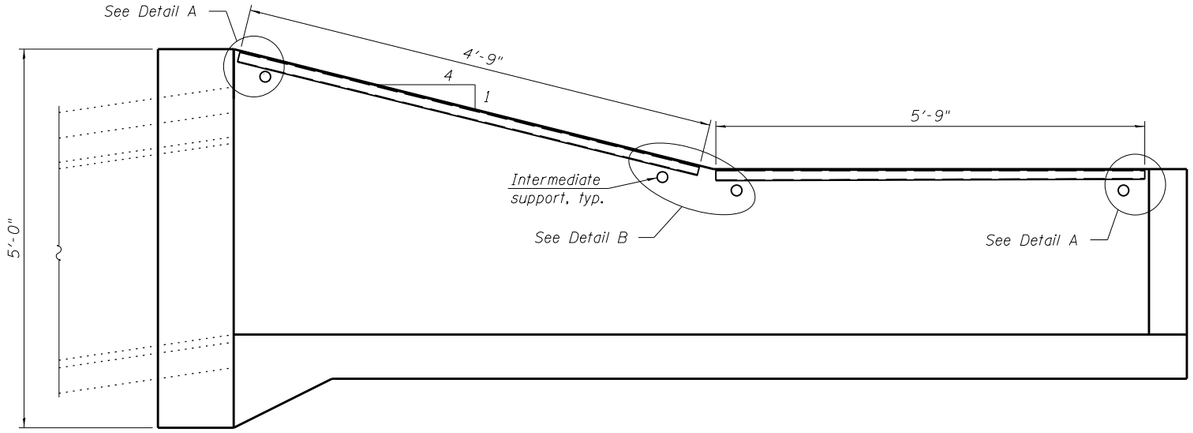

LONGITUDINAL SECTION

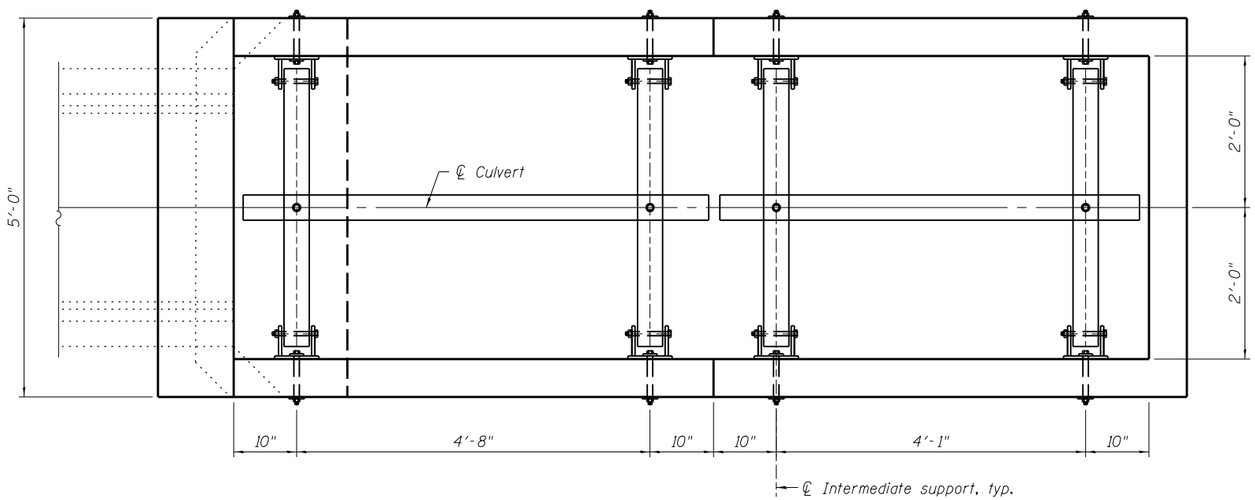

PLAN

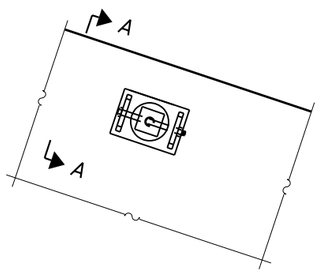

VIEW B-B

(See Detail A for dimensions and details not shown.)

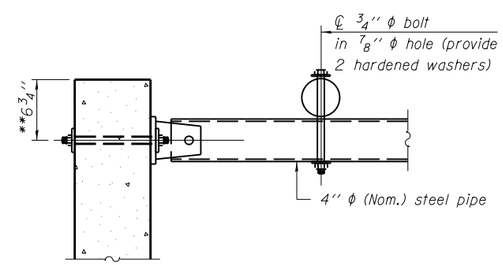

SECTION A-A

** Measured perpendicular to top of culvert wall. In addition, formed hole shall be located a minimum of 6" measured horizontally from any vertical joints necessary for construction of the culvert end section.

GENERAL NOTES

Length shall be determined by the Contractor. All steel pipe shall be standard weight (Sch. 40) unless otherwise noted.

Traversable Steel Pipe System details shown for Box Culvert End Sections. Traversable Steel Pipe System details for other culvert end sections similar.

All components of the Traversable Steel Pipe System shall be galvanized according to the requirements of AASHTO M 111 or M 232 as applicable.

Fabrication of the Traversable Steel Pipe System shall conform to the requirements in Section 505 of the Standard Specifications unless noted otherwise.

Structural steel shapes and plates shall conform to the requirements of Article 1006.04 of the Standard Specifications. Steel pipes shall conform to the requirements of ASTM A 53 (Type E or S), Grade B.

Anchor rods shall conform to the requirements of ASTM F1554, Grade 105. Anchor rods shall be drilled and epoxy grouted according to the requirements of Section 584 of the Standard Specifications. The chemical adhesive system shall be capable of achieving a minimum proof load of 5000 pounds and an ultimate shear capacity of 8000 pounds per anchor.

Bolts and thru bolts shall conform to the requirements of Article 1006.08 of the Standard Specifications except threaded rods conforming to the requirements of ASTM F1554, Grade 105 may be used for the thru bolts.

The minimum edge distance from the center of a hole to the free edge of a structural shape or plate shall be 1½" unless noted otherwise.

Bolts and anchor rods shall be snug tightened by a few impacts of an impact wrench or the full force of a worker using an ordinary spud wrench, unless noted otherwise.

All cost associated with fabricating, furnishing, and installing the Traversable Steel Pipe System will be paid for at the contract unit price per lineal foot for Traversable Pipe Grate.

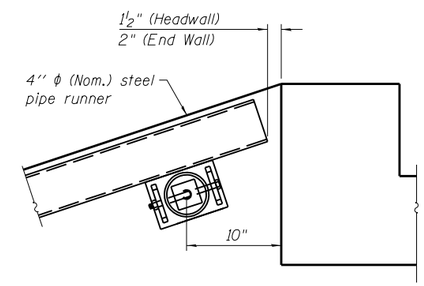

DETAIL A

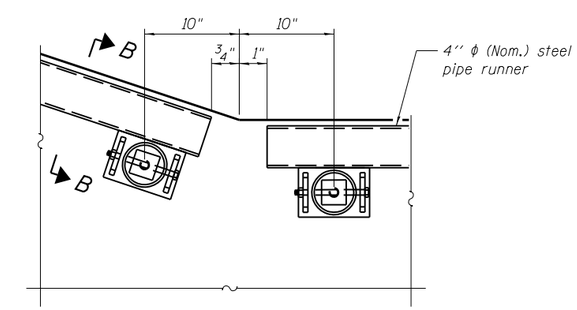

DETAIL B

FILE NAME = W:\Projects\2010\100120 PTB 157\25\cadd\Structural\Dgn\WD #3 IL 92 Culverts\Statum812+19.00\Final Submittal 13.0320\812+19.00-64H11-004-DropBoxCrossingSys.dgn

WILLS BURKE KELSEY ASSOCIATES LTD. 116 West Main Street, Suite 201 St. Charles, Illinois 60174	USER NAME = hferstl	DESIGNED - HLF	REVISED -	STATE OF ILLINOIS DEPARTMENT OF TRANSPORTATION	TRAVERSABLE STEEL PIPE SYSTEM WITH DROP BOX STA. 812+19.00 RT.
		CHECKED - DLS	REVISED -		
	PLOT SCALE =	DRAWN - HLF	REVISED -		
	PLOT DATE = 3/20/2013	CHECKED - DLS	REVISED -		SHEET NO. 4 OF 4 SHEETS

F.A.P. RTE.	SECTION	COUNTY	TOTAL SHEETS	SHEET NO.
599	(83MFT & 103MFT)W	ROCK ISLAND	340	137
		CONTRACT NO. 64H11		
FED. ROAD DIST. NO.	ILLINOIS	FED. AID PROJECT		

Existing Structure: Existing culvert is a 4' x 3' RC box culvert with cantilever wingwalls built in 1947 under Section 83. The existing culvert is approximately 65'-2" out to out headwalls. The upstream end of the existing culvert will be extended. One lane of traffic to be maintained at all times utilizing staged construction.

No salvage.

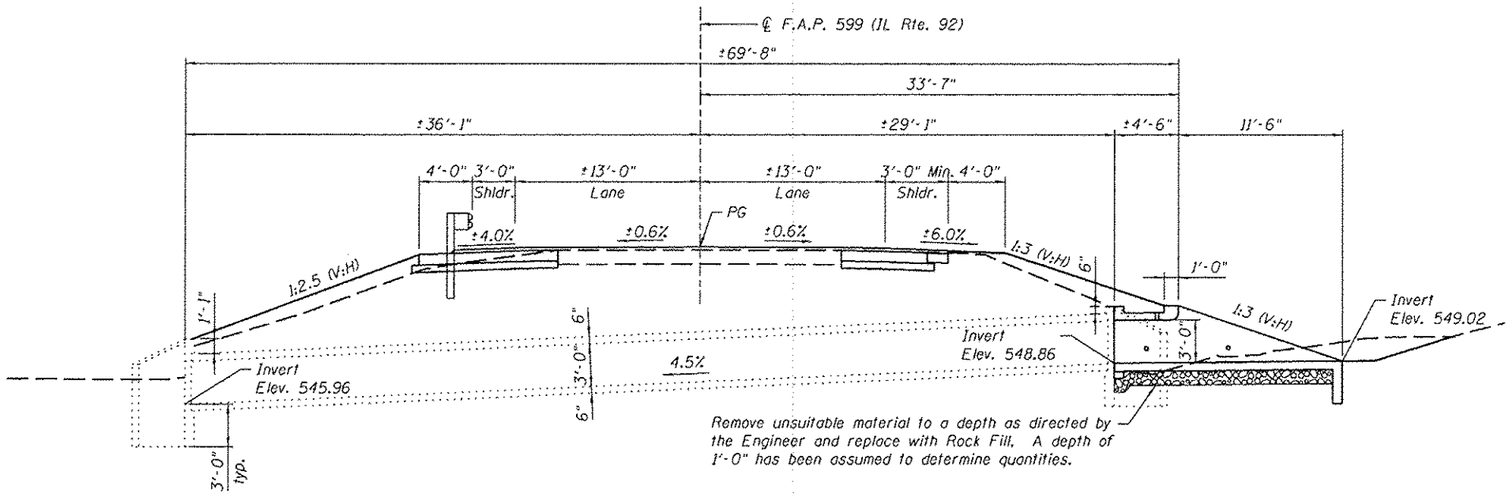

LONGITUDINAL SECTION

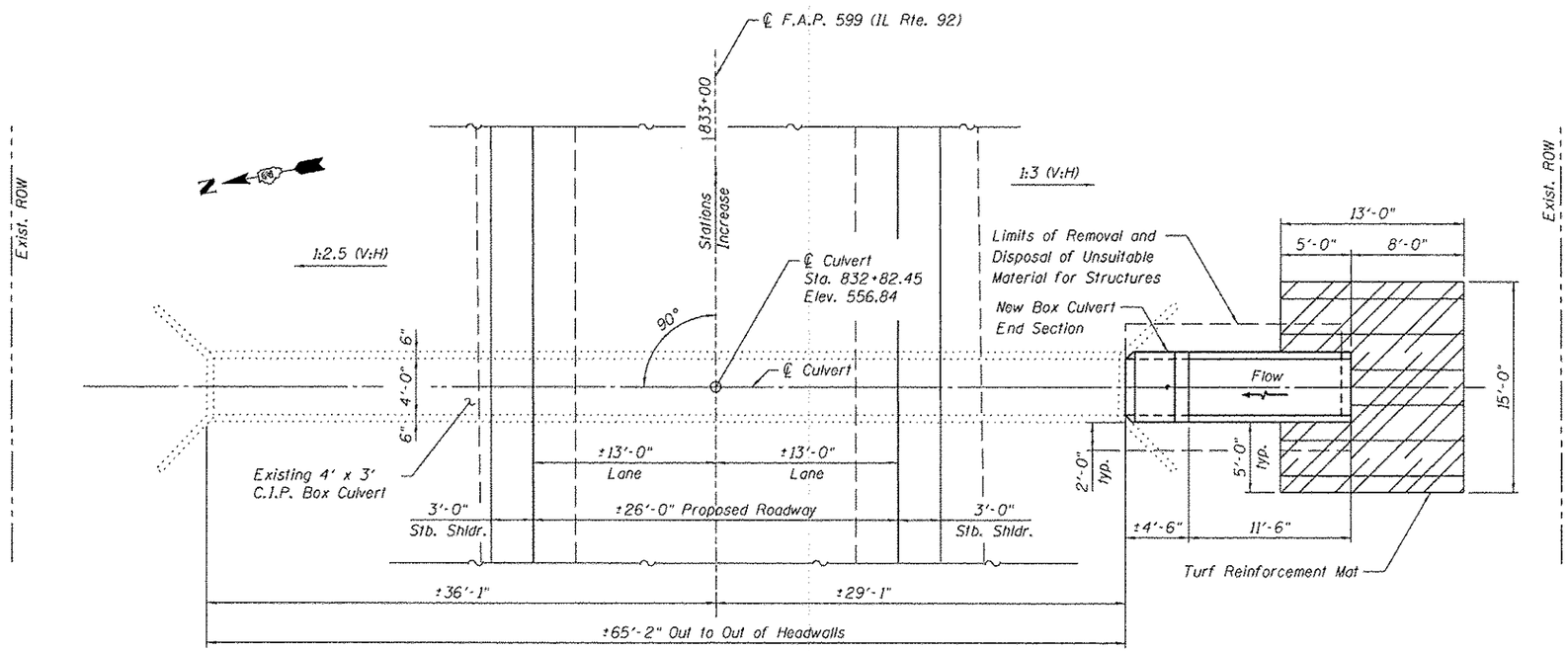

PLAN

GENERAL NOTES

1. Plan dimensions and details have been taken from existing plans or survey/field checks. As such, these dimensions and details are subject to nominal construction variations. The Contractor shall field verify existing dimensions and details affecting new construction and make necessary approved adjustments prior to construction or ordering of materials. Such variations shall not be cause for additional compensation for a change in scope of the work, however, the Contractor will be paid for the quantity actually furnished at the unit price bid for the work.
2. All exposed concrete edges shall be chamfered $^3/_4$" unless noted otherwise. All construction joints shall be bonded.
3. This work shall conform to the requirements of the applicable portions of Sections 501, 503, 505, 508 and 584 of the Standard Specifications.
4. A precast option is not allowed at this location.
5. Drainage holes shall conform to the requirements of Article 503.11 of the Standard Specifications.
6. Nonwoven geotexile fabric shall conform to the requirements of Art. 1080.01 of the Standard Specifications. The minimum weight of the fabric shall be 6 ounces per square yard.

TOTAL BILL OF MATERIAL

ITEM	UNIT	TOTAL
Turf Reinforcement Mat	Sq. Yd.	19
Removal and Disposal of Unsuitable Material for Structures	Cu. Yd.	6
Box Culvert End Sections, Culvert No. 01	Each	1
Traversable Pipe Grate	Foot	10.3
Rock Fill	Ton	10

DESIGN SPECIFICATIONS

2002 AASHTO Bridge Design Specifications

DESIGN STRESSES

FIELD UNITS

f'c = 3,500 psi
fy = 60,000 psi (Reinforcement)

INDEX OF SHEETS

1. General Plan & Elevation
2. Box Culvert End Section
3. Box Culvert End Section Details
4. Traverasable Steel Pipe System

LICENSED STRUCTURAL ENGINEER
DAVID L. SMOOT
081-005861
ST. CHARLES
ILLINOIS
STATE OF ILLINOIS

Signature
Date: March 13, 2013
License Expires 11/30/2014

GENERAL PLAN & ELEVATION
ILLINOIS ROUTE 92
F.A.P. RTE 599 - SEC. (83MFT & 103MFT)W
ROCK ISLAND COUNTY
STATION 832+82.45

FILE NAME = W:\Projects\2818\128128 PTB 157\25\cadd\Structural\Dgn\WD #3 IL 92 Culverts\Station832+82.45\Final Submittal 130328\832+82.45 64H11-001-GPE.dgn

WILLS BURKE KELSEY ASSOCIATES LTD.
116 West Main Street, Suite 201
St. Charles, Illinois 60174

USER NAME = nparris	DESIGNED - AWH	REVISED -
	CHECKED - DLS	REVISED -
PLOT SCALE =	DRAWN - AWH	REVISED -
PLOT DATE = 3/21/2013	CHECKED - DLS	REVISED -

STATE OF ILLINOIS
DEPARTMENT OF TRANSPORTATION

GENERAL PLAN & ELEVATION
STA. 832+82.45
SHEET NO. 1 OF 4 SHEETS

F.A.P. RTE.	SECTION	COUNTY	TOTAL SHEETS	SHEET NO.
599	(83MFT & 103MFT)W	ROCK ISLAND	340	138
		CONTRACT NO. 64H11		
FED. ROAD DIST. NO.	ILLINOIS	FED. AID PROJECT		

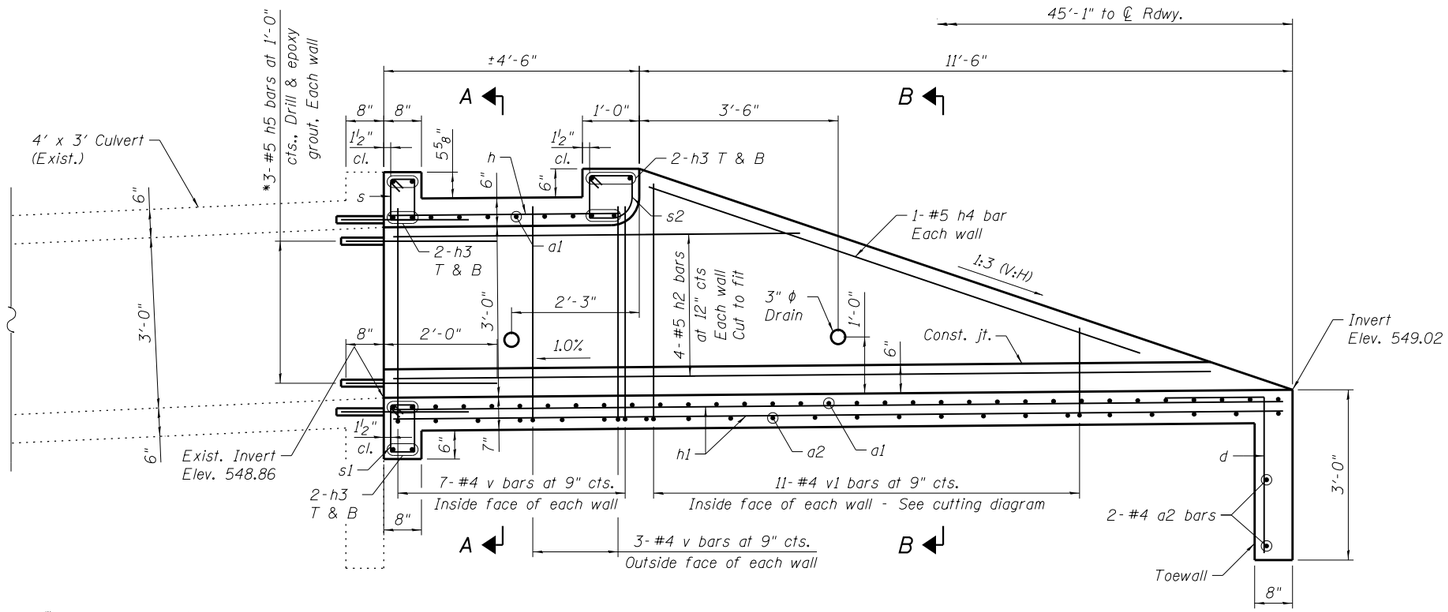

* Epoxy grout reinforcement bars according to the requirements of Section 584 of the Standard Specifications. The chemical adhesive system shall be capable of achieving a minimum proof load of 5,000 lb. Cost included in the pay item Box Culvert End Sections, Culvert No. 01.

LONGITUDINAL SECTION

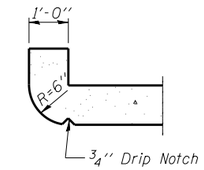

SECTION THRU HEADWALL

(Up Stream End Only)

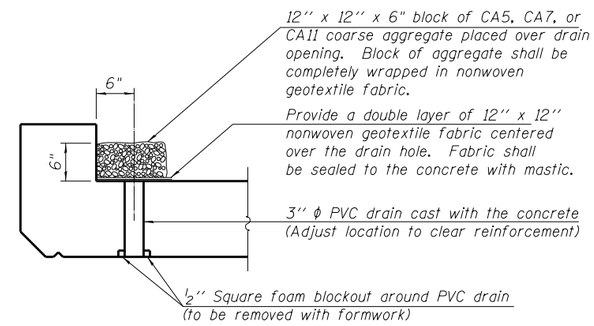

DRAIN DETAIL

(All costs associated with furnishing and constructing the above drain details will not be measured for payment but shall be included in the contract unit price for the end section.)

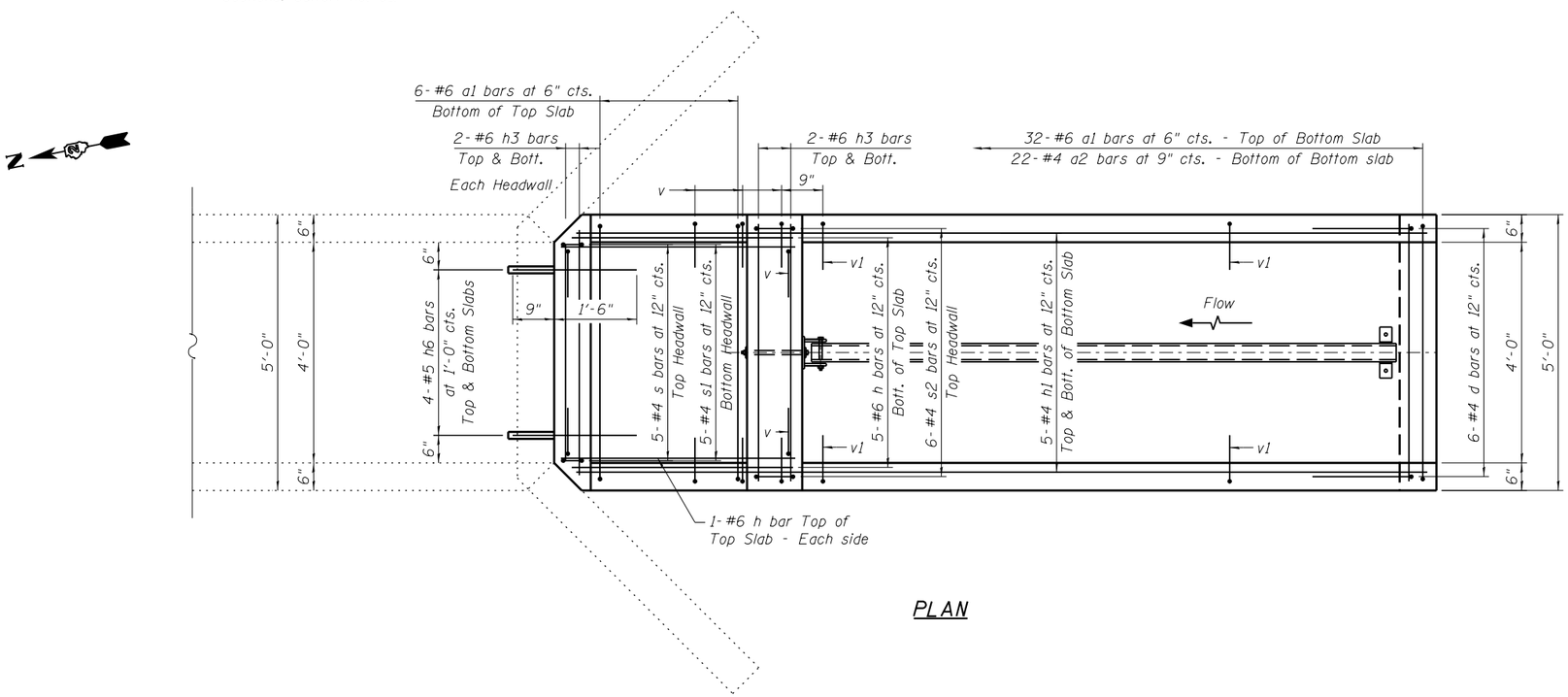

PLAN

FILE NAME = W:\Projects\2010\100120 PTB 157\25\cadd\Structural\Dgn\WO #3 IL 92 Culverts\Station832+82.45\Final Submittal 13\B320832+82.45-64H11-002-Extension.dgn

WILLS BURKE KELSEY ASSOCIATES LTD. 116 West Main Street, Suite 201 St. Charles, Illinois 60174	USER NAME = hferstl	DESIGNED - DLS	REVISED -	STATE OF ILLINOIS DEPARTMENT OF TRANSPORTATION	BOX CULVERT END SECTION STA. 832+82.45 RT.	F.A.P. RTE.	SECTION	COUNTY	TOTAL SHEETS	SHEET NO.
		CHECKED - AEU	REVISED -			599	(83MFT & 103MFT)W	ROCK ISLAND	340	139
	PLOT SCALE =	DRAWN - DLS	REVISED -					CONTRACT NO. 64H11		
	PLOT DATE = 3/20/2013	CHECKED - AEU	REVISED -		SHEET NO. 2 OF 4 SHEETS	FED. ROAD DIST. NO.	ILLINOIS	FED. AID PROJECT		

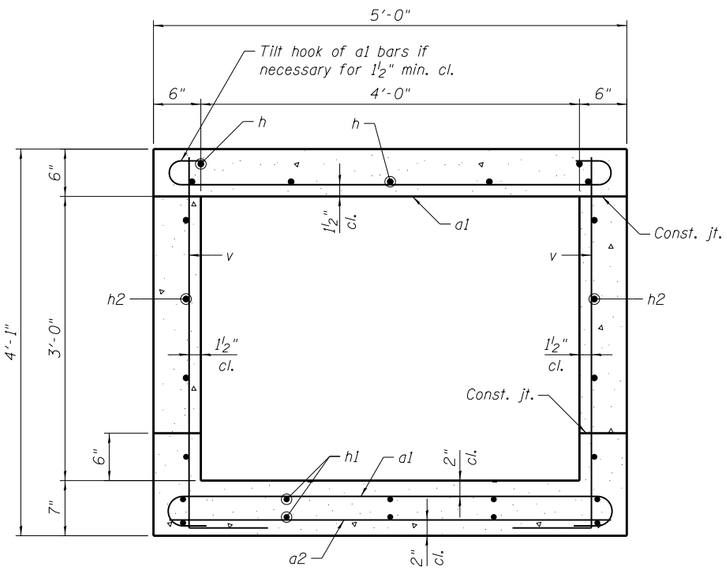

SECTION A-A

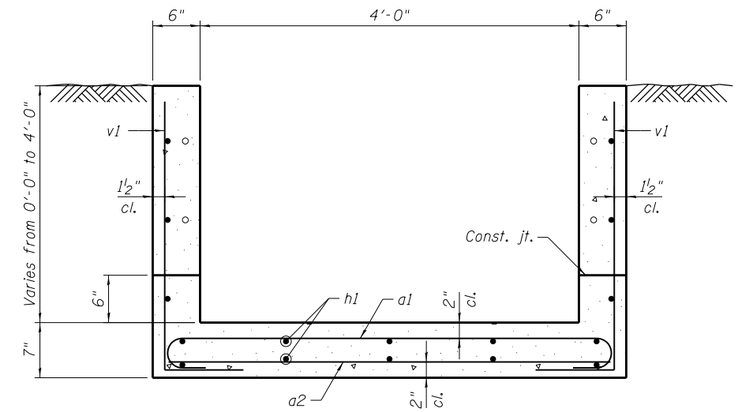

SECTION B-B

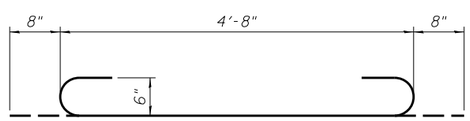

BAR a1

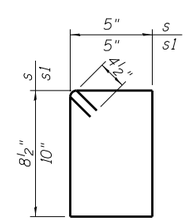

BARS s & s1

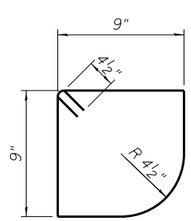

BAR s2

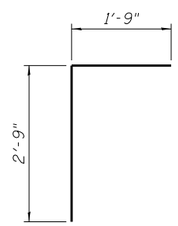

BAR d

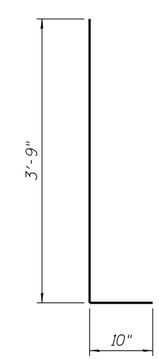

BAR v

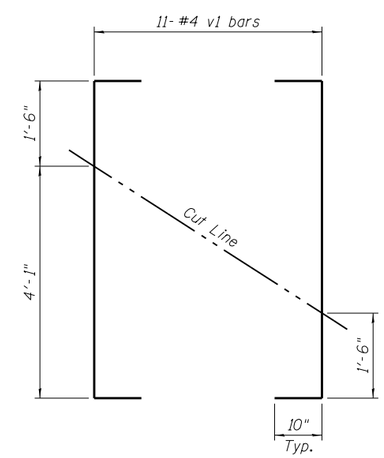

CUTTING DIAGRAM

Order bars full length. Cut as shown and use remainder of bars in opposite wall.

BILL OF MATERIAL

(For Information Only)

Bar	No.	Size	Length	Shape
a1	38	#6	6'-0"	
a2	24	#4	4'-8"	
d	6	#4	4'-6"	
h	7	#6	4'-0"	
h1	10	#4	15-8"	
h2	8	#5	14'-4"	
h3	12	#6	4'-8"	
h4	2	#5	9'-1"	
h5	6	#5	2'-8"	
h6	8	#6	2'-3"	
s	5	#4	3'-0"	
s1	5	#4	3'-3"	
s2	6	#4	3'-9"	
v	20	#4	4'-7"	
v1	11	#4	7'-3"	

Description	Unit	Quantity
Concrete Box Culverts	Cu. Yd.	4.0
Reinforcement Bars	Pound	1,000

FILE NAME = W:\Projects\2010\100120 PTB 157\25\cadd\Structural\Dgn\WD #3 IL 92 Culverts\Station832+82.45\Final Submittal 13.0320\832+82.45-64H11-003-ExtensionDetls.dgn

WILLS BURKE KELSEY ASSOCIATES LTD.
116 West Main Street, Suite 201
St. Charles, Illinois 60174

USER NAME = hferstl	DESIGNED - DLS	REVISED -	
	CHECKED - AEU	REVISED -	
PLOT SCALE =	DRAWN - DLS	REVISED -	
PLOT DATE = 3/20/2013	CHECKED - AEU	REVISED -	

STATE OF ILLINOIS
DEPARTMENT OF TRANSPORTATION

BOX CULVERT END SECTION DETAILS
STA. 832+82.45 RT.

SHEET NO. 3 OF 4 SHEETS

F.A.P. RTE.	SECTION	COUNTY	TOTAL SHEETS	SHEET NO.
599	(83MFT & 103MFT)W	ROCK ISLAND	340	140
		CONTRACT NO. 64H11		
FED. ROAD DIST. NO.	ILLINOIS	FED. AID PROJECT		

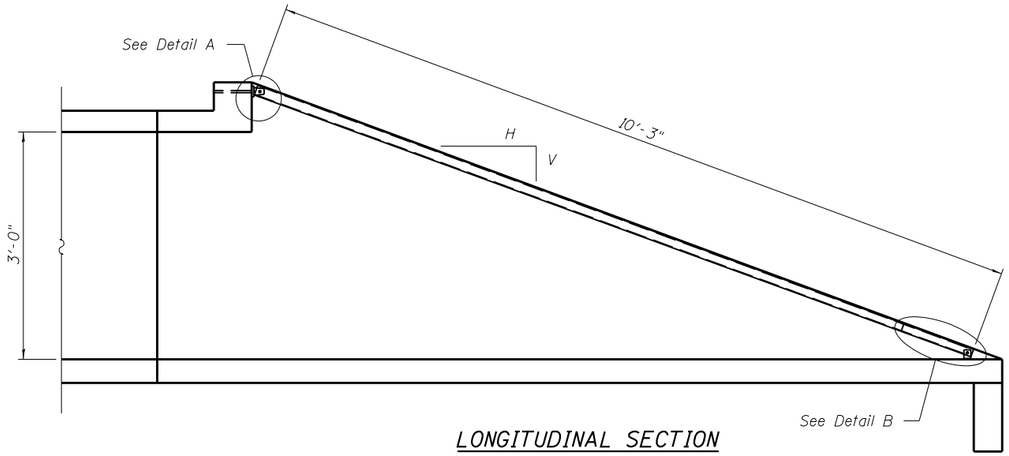

LONGITUDINAL SECTION

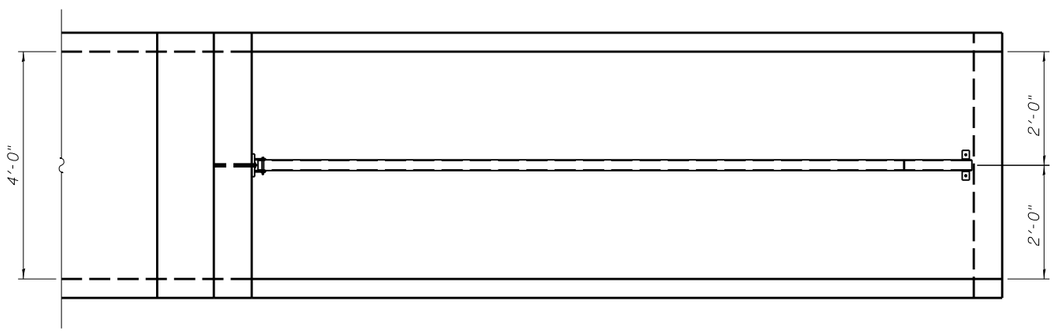

PLAN VIEW

GENERAL NOTES

Length shall be determined by the Contractor. All steel pipe shall be standard weight (Sch. 40) unless otherwise noted.

Traversable Steel Pipe System details shown for Box Culvert End Sections. Traversable Steel Pipe System details for other culvert end sections similar.

All components of the Traversable Steel Pipe System shall be galvanized according to the requirements of AASHTO M 111 or M 232 as applicable.

Fabrication of the Traversable Steel Pipe System shall conform to the requirements in Section 505 of the Standard Specifications unless noted otherwise.

Structural steel shapes and plates shall conform to the requirements of Article 1006.04 of the Standard Specifications. Steel pipes shall conform to the requirements of ASTM A 53 (Type E or S), Grade B.

Anchor rods shall conform to the requirements of ASTM F1554, Grade 105. Anchor rods shall be drilled and epoxy grouted according to the requirements of Section 584 of the Standard Specifications. The chemical adhesive system shall be capable of achieving a minimum proof load of 5000 pounds and an ultimate shear capacity of 8000 pounds per anchor.

Bolts and thru bolts shall conform to the requirements of Article 1006.08 of the Standard Specifications except threaded rods conforming to the requirements of ASTM F1554, Grade 105 may be used for the thru bolts.

The minimum edge distance from the center of a hole to the free edge of a structural shape or plate shall be 1 1/2 '' unless noted otherwise.

Bolts and anchor rods shall be snug tightened by a few impacts of an impact wrench or the full force of a worker using an ordinary spud wrench unless otherwise noted.

All cost associated with fabricating, furnishing, and installing the Traversable Steel Pipe System will be paid for at the contract unit price per lineal foot for Traversable Pipe Grate.

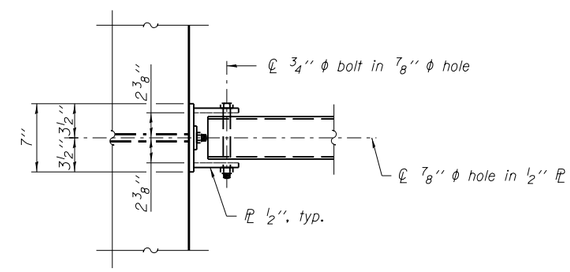

VIEW A-A

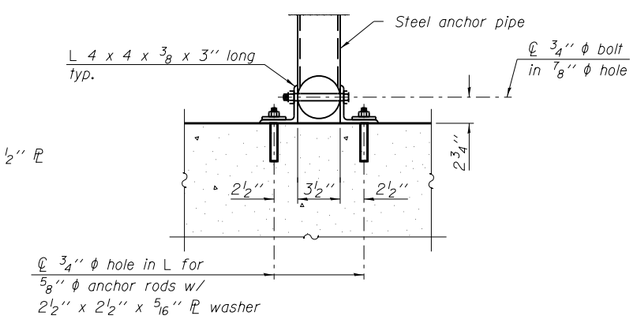

SECTION B-B

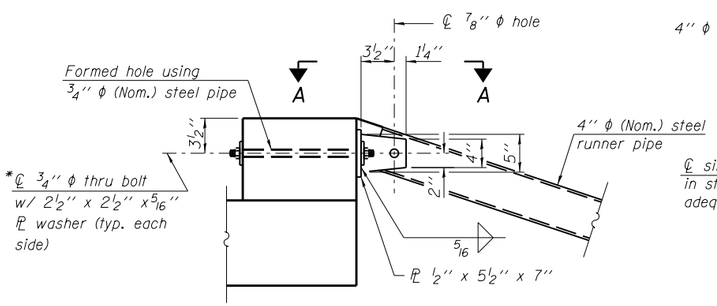

*Bolt shall be tightened per Art. 505.04(f)(2)d of the Standard Specifications

DETAIL A

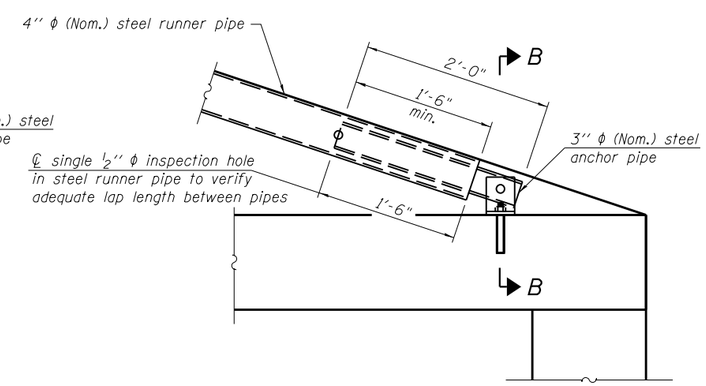

DETAIL B

*** The lap length between pipes may be adjusted in the field to accommodate construction tolerances but shall not be less than 9''.

FILE NAME = W:\Projects\2010\100120 PTB 157-25\cadd\Structural\Dgn\WO #3 IL 92 Culverts\Station832+82.45\Final Submittal 13.0320\832+82.45-64H11-004-GratingSystemDtls.dgn

WILLS BURKE KELSEY ASSOCIATES LTD. 116 West Main Street, Suite 201 St. Charles, Illinois 60174	USER NAME = hferstl	DESIGNED - DLS	REVISED -	STATE OF ILLINOIS DEPARTMENT OF TRANSPORTATION	TRAVERSABLE STEEL PIPE SYSTEM STA. 832+82.45 RT.	F.A.P. RTE.	SECTION	COUNTY	TOTAL SHEETS / SHEET NO.
		CHECKED - AEU	REVISED -			599	(83MFT & 103MFT)W	ROCK ISLAND	340 / 141
	PLOT SCALE =	DRAWN - DLS	REVISED -					CONTRACT NO. 64H11	
	PLOT DATE = 3/20/2013	CHECKED - AEU	REVISED -		SHEET NO. 4 OF 4 SHEETS	FED. ROAD DIST. NO.	ILLINOIS	FED. AID PROJECT	

Existing Structure: Existing culvert is a twin cell 10'x6' RC box culvert with vertical contilever wingwalls built in 1947 under Section 83. The existing culvert is approximately 52'-2" out to out headwalls. The upstream end of the existing culvert will be extended. At the downstream end, the existing concrete wingwalls will be removed and replaced with sheet pile wingwalls. One lane of traffic to be maintained at all times utilizing staged construction.

No salvage.

DESIGN STRESSES

FIELD UNITS

f'c = 3,500 psi
fy = 60,000 psi (Reinforcement)
fu = 38,500 psi (Permanent Sheet Piling)
fy = 50,000 psi (AASHTO M270, Grade 50W)

DESIGN SPECIFICATIONS

2002 AASHTO Bridge Design Specifications

STATION 844+26.26
BUILT BY
STATE OF ILLINOIS
LOADING HL-93
STRUCTURE NO. 081-0201

NAME PLATE
See Std. 515001

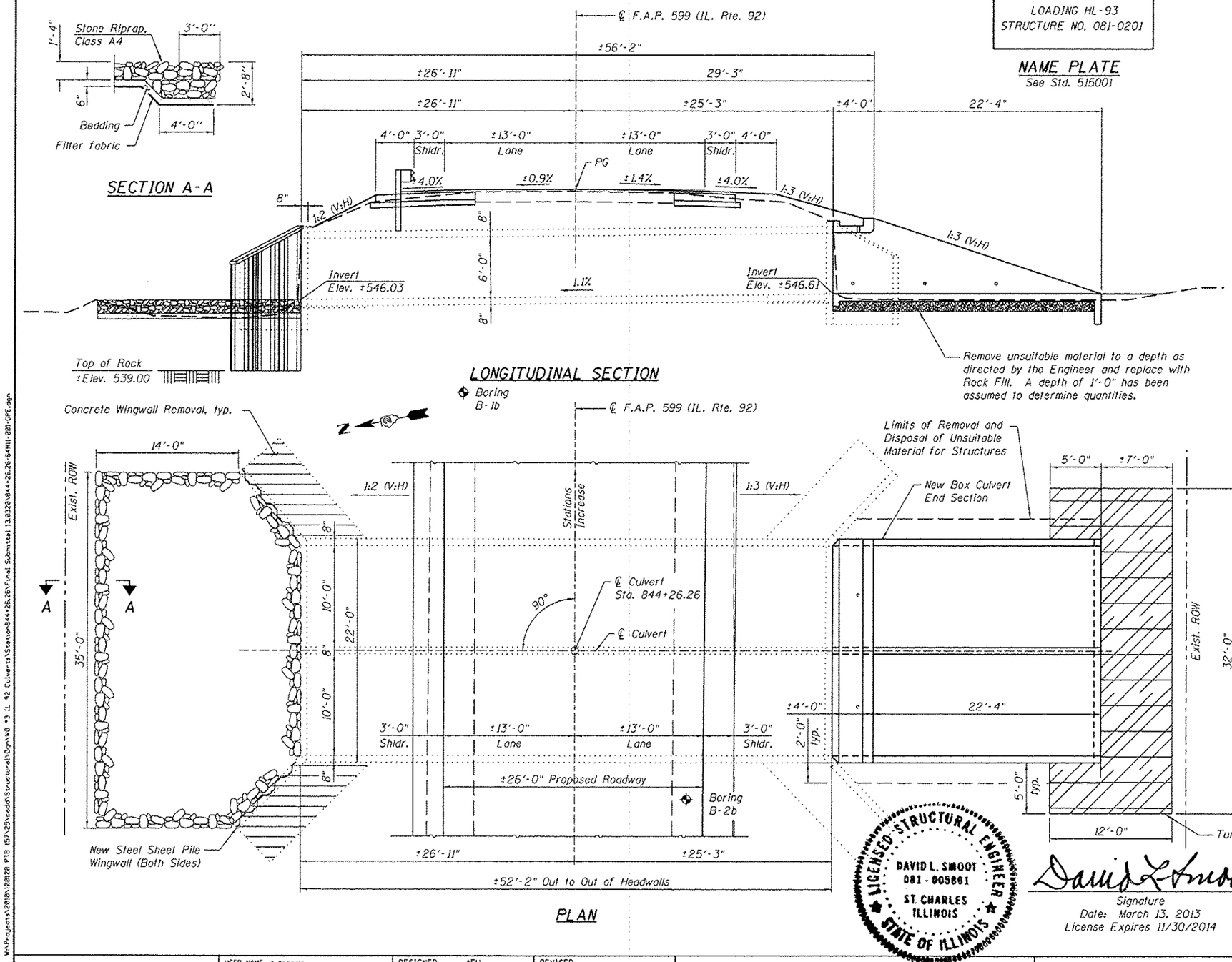

GENERAL NOTES

1. Plan dimensions and details have been taken from existing plans or survey/field checks. As such, these dimensions and details are subject to nominal construction variations. The Contractor shall field verify existing dimensions and details affecting new construction and make necessary approved adjustments prior to construction or ordering of materials. Such variations shall not be cause for additional compensation for a change in scope of the work, however, the Contractor will be paid for the quantity actually furnished at the unit price bid for the work.
2. The sheet piling for the wingwalls shall conform to the special provision Permanent Steel Sheet Piling. The minimum effective section modulus for the Permanent Steel Sheet Piling shall be 3.9 in^3/ft.
3. The fabricated steel cap shall be AASHTO M270 Grade 50W. The cap, bolts, nuts and washers shall not be paid for separately, but shall be included in the cost for Permanent Steel Sheet Piling.
4. Fasteners shall be AASHTO M164 Type 3.
5. New coarse aggregate shall be placed behind the existing headwall for the full length of the headwall and shall be 12" wide by 6" high. The coarse aggregate shall be gradation CA 7 or CA 11 material. This item shall not be paid for separately, but shall be included in the cost of Concrete Wingwall Removal.
6. All exposed concrete edges shall be chamfered $^3/_4$" unless noted otherwise. All construction joints shall be bonded.
7. This work shall conform to the requirements of the applicable portions of Sections 501, 503, 505, 508 and 584 of the Standard Specifications.
8. A precast option is not allowed at this location.
9. Drainage holes shall conform to the requirements of Article 503.11 of the Standard Specifications.
10. Nonwoven geotextile fabric shall conform to the requirements of Art. 1080.01 of the Standard Specifications. The minimum weight of the fabric shall be 6 ounces per square yard.

TOTAL BILL OF MATERIAL

ITEM	UNIT	TOTAL
Turf Reinforcement Mat	Sq. Yd.	31
Stone Riprap, Class A4	Sq. Yd.	77
Filter Fabric	Sq. Yd.	77
Removal and Disposal of Unsuitable Material for Structures	Cu. Yd.	26
Name Plate	Each	1
Box Culvert End Section, Culvert No. 02	Each	1
Concrete Wingwall Removal	Each	2
Permanent Steel Sheet Piling	Sq. Ft.	226
Traversable Pipe Grate	Foot	170.0
Rock Fill	Ton	46

INDEX OF SHEETS

1. General Plan & Elevation
2. Box Culvert End Section - Section
3. Box Culvert End Section - Plan
4. Box Culvert End Section Details
5. Traversable Steel Pipe System
6. Box Culvert End Section Details
7. Soil Boring Logs

LICENSED STRUCTURAL ENGINEER
DAVID L. SMOOT
081-005661
ST. CHARLES
ILLINOIS
STATE OF ILLINOIS

David L. Smoot
Signature
Date: March 13, 2013
License Expires 11/30/2014

GENERAL PLAN & ELEVATION
ILLINOIS ROUTE 92
F.A.P. RTE 599 - SEC. (83MFT & 103MFT)W
ROCK ISLAND COUNTY
STATION 844+26.26
STRUCTURE NO. 081-0201

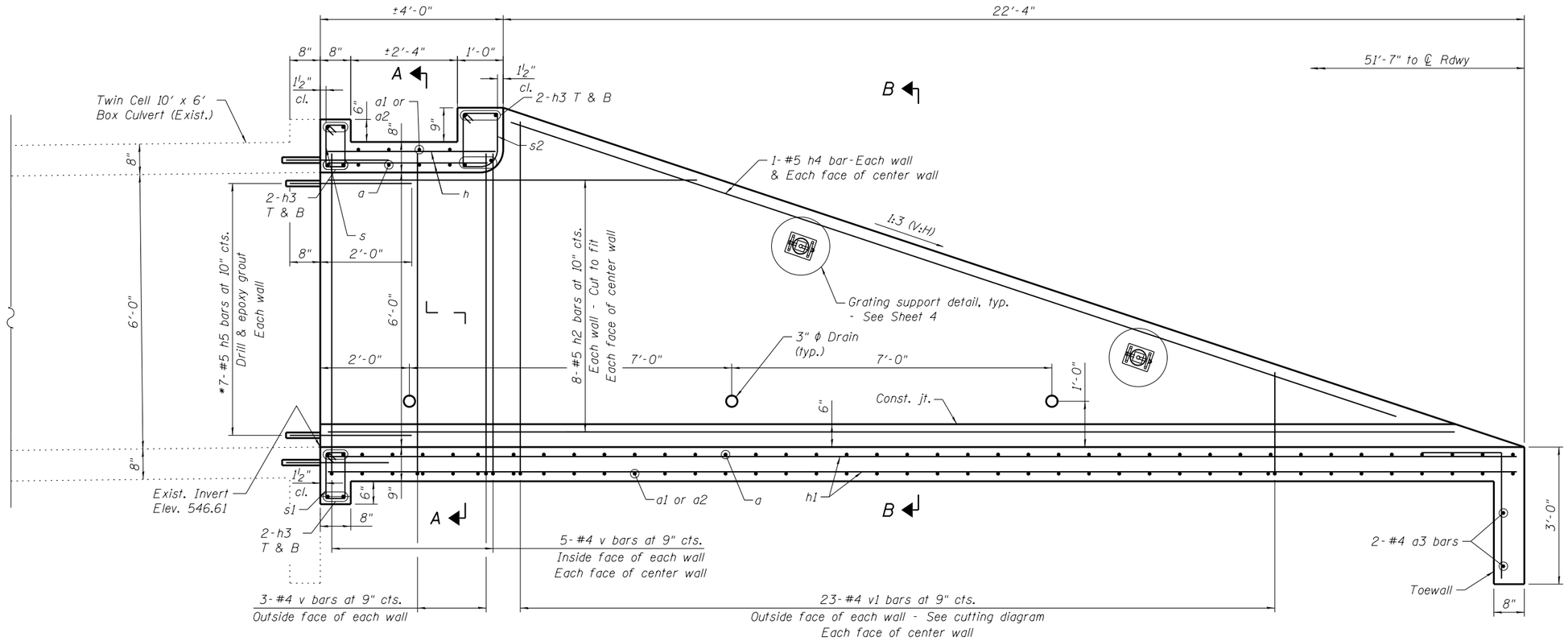

LONGITUDINAL SECTION

* Epoxy grout reinforcement bars according to the requirements of Section 584 of the Standard Specifications. The chemical adhesive system shall be capable of achieving a minimum proof load of 5,000 lb. Cost included in the pay item Box Culvert End Sections, Culvert No. 02.

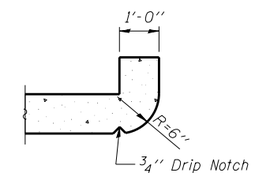

SECTION THRU HEADWALL

(Up Stream End Only)

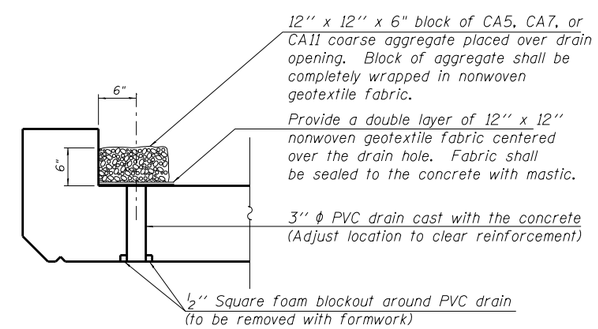

DRAIN DETAIL

(All costs associated with furnishing and constructing the above drain details will not be measured for payment but shall be included in the contract unit price for the end section.)

FILE NAME = W:\Projects\2010\120120 PTB 157-25\cadd\Structural\Dgn\WD #3 IL 92 Culverts\Station844+26.26\Final Submittal 13.0320\844+26.26-64H11-002-GratedEndSection01.dgn

WILLS BURKE KELSEY ASSOCIATES LTD. 116 West Main Street, Suite 201 St. Charles, Illinois 60174	USER NAME = hferstl	DESIGNED - DLS	REVISED -	STATE OF ILLINOIS DEPARTMENT OF TRANSPORTATION	BOX CULVERT END SECTION – STA. 844+26.26 RT. STRUCTURE NO. 081-0201
		CHECKED - AEU	REVISED -		
	PLOT SCALE =	DRAWN - DLS	REVISED -		
	PLOT DATE = 3/20/2013	CHECKED - AEU	REVISED -		SHEET NO. 2 OF 7 SHEETS

F.A.P. RTE.	SECTION	COUNTY	TOTAL SHEETS	SHEET NO.
599	(83MFT & 103MFT)W	ROCK ISLAND	340	143
		CONTRACT NO. 64H11		
FED. ROAD DIST. NO.	ILLINOIS	FED. AID PROJECT		

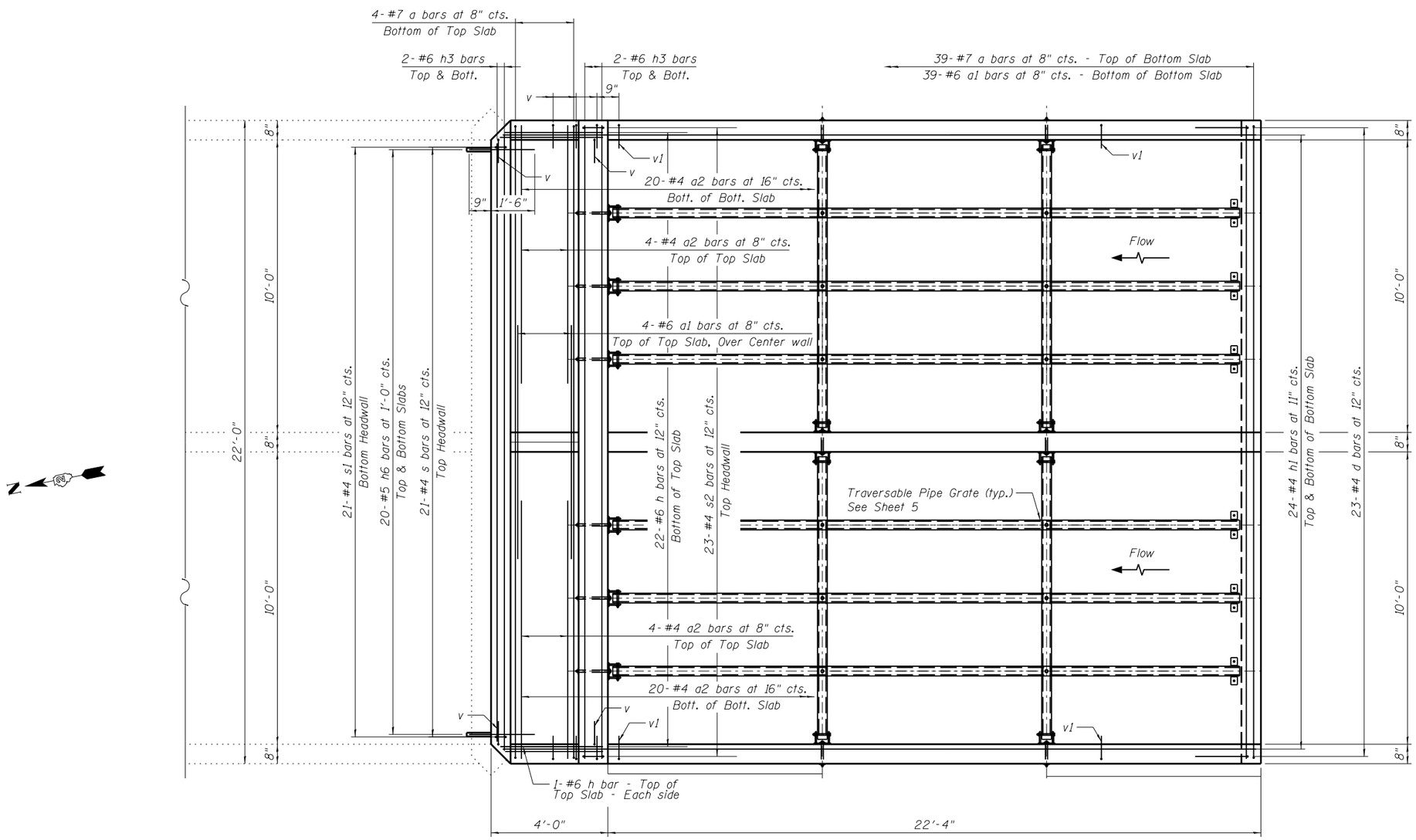

PLAN

WILLS BURKE KELSEY ASSOCIATES LTD. 116 West Main Street, Suite 201 St. Charles, Illinois 60174	USER NAME = hferstl	DESIGNED - DLS	REVISED -	STATE OF ILLINOIS DEPARTMENT OF TRANSPORTATION	BOX CULVERT END SECTION – STA. 844+26.26 RT. STRUCTURE NO. 081–0201	F.A.P. RTE.	SECTION	COUNTY	TOTAL SHEETS	SHEET NO.
		CHECKED - AEU	REVISED -			599	(83MFT & 103MFT)W	ROCK ISLAND	340	144
	PLOT SCALE =	DRAWN - DLS	REVISED -		SHEET NO. 3 OF 7 SHEETS			CONTRACT NO. 64H11		
	PLOT DATE = 3/20/2013	CHECKED - AEU	REVISED -			FED. ROAD DIST. NO.	ILLINOIS	FED. AID PROJECT		

FILE NAME = W:\Projects\2010\100120 PTB 157\25\cadd\Structural\Dgn\WO #3 IL 92 Culverts\Station844+26.26-Final Submittal 13.0320\844+26.26-64H11-003-GradedEndSection02.dgn

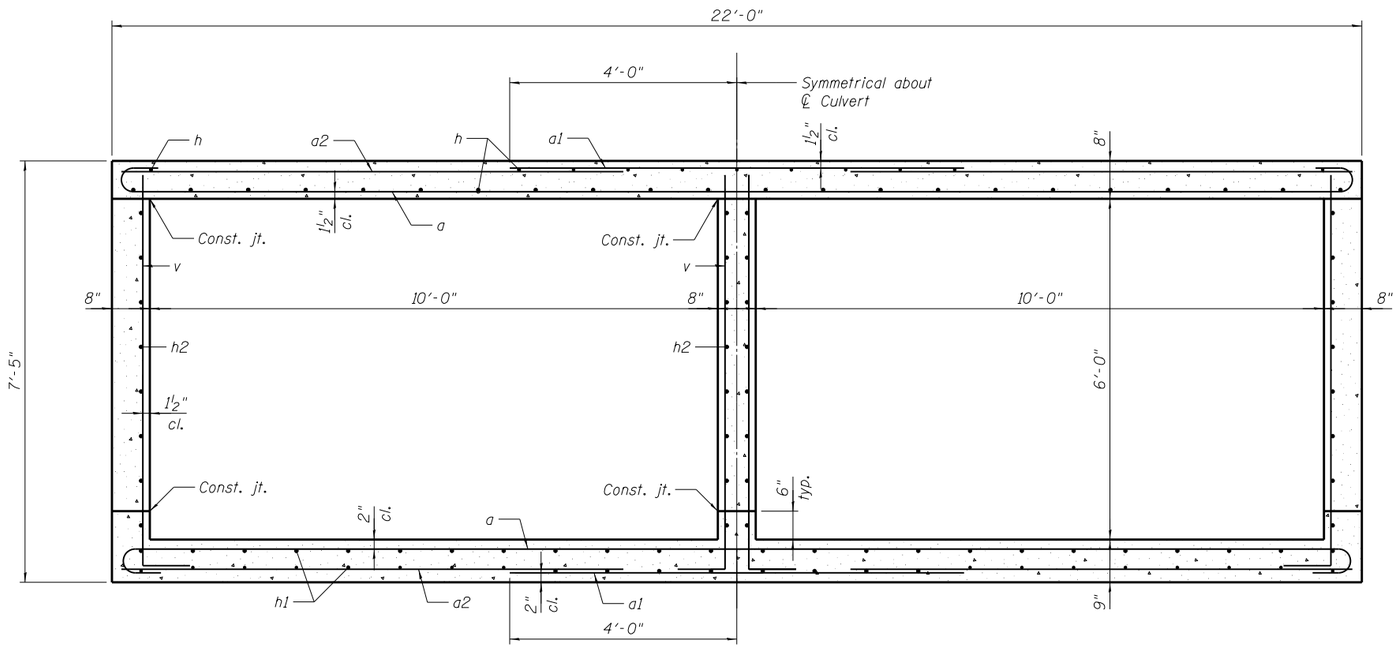

SECTION A-A

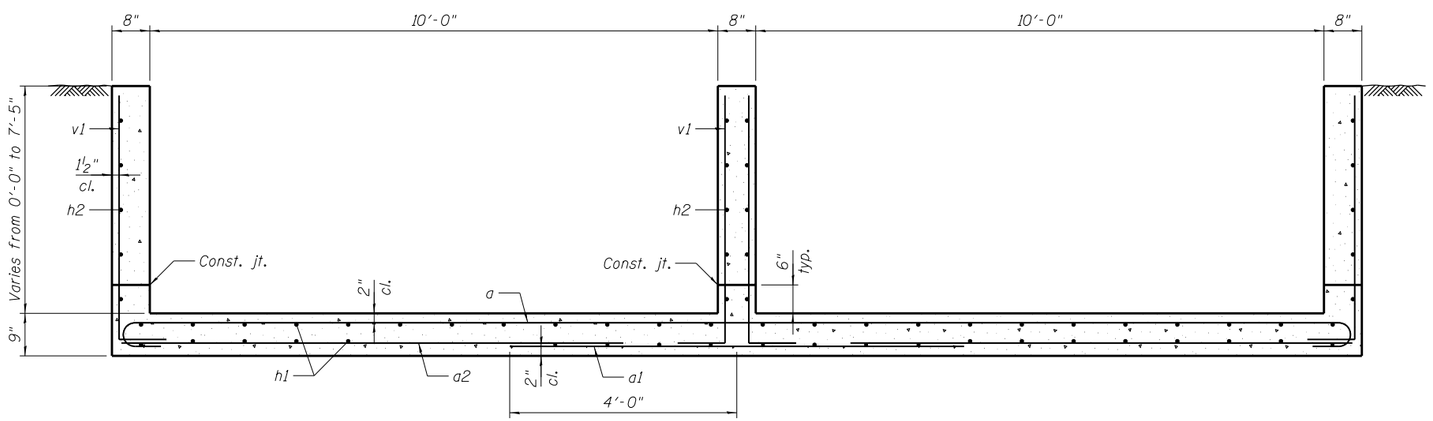

SECTION B-B

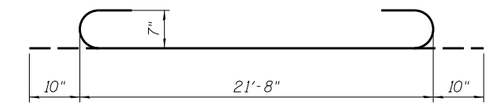

BAR a

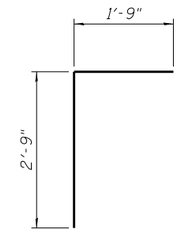

BAR d

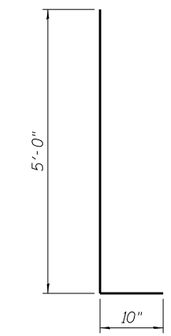

BAR v

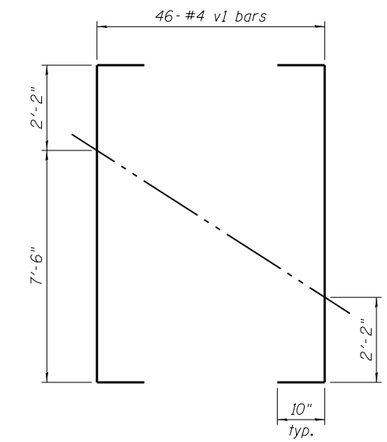

CUTTING DIAGRAM

Order bars full length. Cut as shown and use remainder of bars in opposite wall.

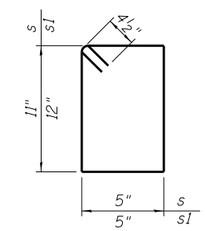

BARS s & s1

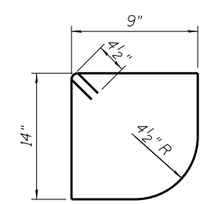

BAR s2

BILL OF MATERIAL

(For Information Only)

Bar	No.	Size	Length	Shape
a	43	#7	23'-4"	
a1	43	#6	8'-0"	
a2	48	#4	8'-10"	
a3	2	#4	21'-8"	
d	23	#4	4'-6"	
h	31	#6	3'-6"	
h1	48	#4	26'-0"	
h2	32	#5	24'-6"	
h3	12	#6	21'-8"	
h4	4	#5	20'-4"	
h5	21	#5	2'-8"	
h6	40	#6	2'-3"	
s	21	#4	3'-5"	
s1	21	#4	3'-7"	
s2	23	#4	4'-5"	
v	26	#4	7'-9"	
v1	46	#4	11'-4"	

Description	Unit	Quantity
Concrete Box Culverts	Cu. Yd.	23.7
Reinforcement Bars	Pound	6,090

FILE NAME = W:\Projects\2010\10120 PTB 157\25\cadd\Structural\Dgn\WD #3 IL 92 Culverts\Station844+26.26\Final Submittal 13.0320\844+26.26-64H11-004-EndSectionDetls.dgn

WILLS BURKE KELSEY ASSOCIATES LTD.
116 West Main Street, Suite 201
St. Charles, Illinois 60174

USER NAME = hferstl	DESIGNED - DLS	REVISED -	
	CHECKED - AEU	REVISED -	
PLOT SCALE =	DRAWN - DLS	REVISED -	
PLOT DATE = 3/20/2013	CHECKED - AEU	REVISED -	

STATE OF ILLINOIS
DEPARTMENT OF TRANSPORTATION

BOX CULVERT END SECTION DETAILS – STA. 844+26.26 RT.
STRUCTURE NO. 081-0201

SHEET NO. 4 OF 7 SHEETS

F.A.P. RTE.	SECTION	COUNTY	TOTAL SHEETS	SHEET NO.
599	(83MFT & 103MFT)W	ROCK ISLAND	340	145
		CONTRACT NO. 64H11		
FED. ROAD DIST. NO.	ILLINOIS	FED. AID PROJECT		

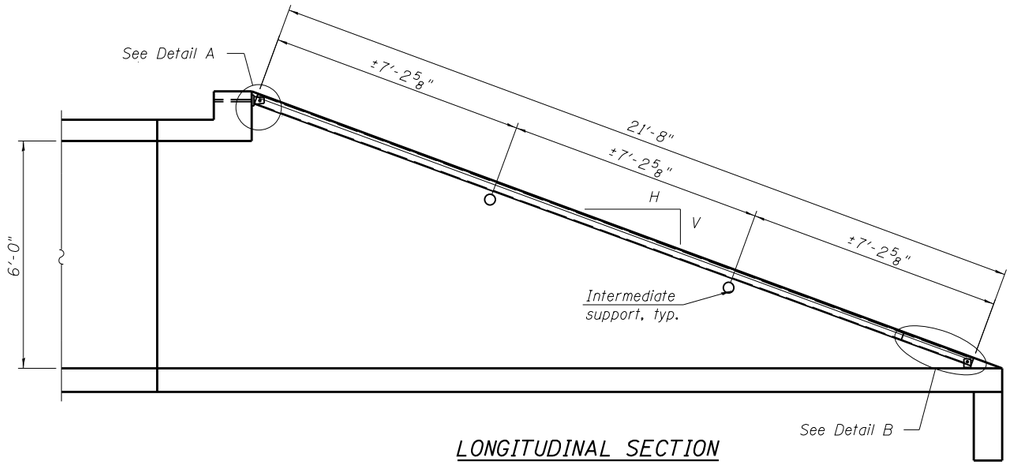

LONGITUDINAL SECTION

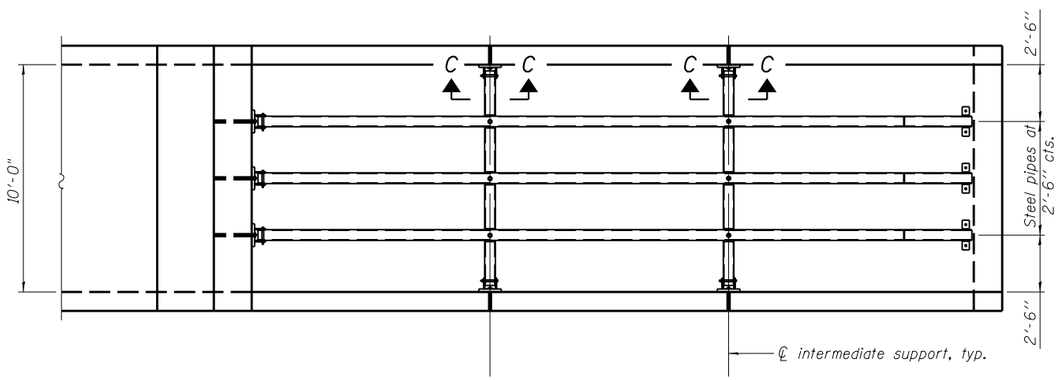

PLAN VIEW

(One cell shown, other cell similiar)

GENERAL NOTES

Length shall be determined by the Contractor. All steel pipe shall be standard weight (Sch. 40) unless otherwise noted.

Traversable Steel Pipe System details shown for Box Culvert End Sections. Traversable Steel Pipe System details for other culvert end sections similar.

All components of the Traversable Steel Pipe System shall be galvanized according to the requirements of AASHTO M 111 or M 232 as applicable.

Fabrication of the Traversable Steel Pipe System shall conform to the requirements in Section 505 of the Standard Specifications unless noted otherwise.

Structural steel shapes and plates shall conform to the requirements of Article 1006.04 of the Standard Specifications. Steel pipes shall conform to the requirements of ASTM A 53 (Type E or S), Grade B.

Anchor rods shall conform to the requirements of ASTM F1554, Grade 105. Anchor rods shall be drilled and epoxy grouted according to the requirements of Section 584 of the Standard Specifications. The chemical adhesive system shall be capable of achieving a minimum proof load of 5000 pounds and an ultimate shear capacity of 8000 pounds per anchor.

Bolts and thru bolts shall conform to the requirements of Article 1006.08 of the Standard Specifications except threaded rods conforming to the requirements of ASTM F1554, Grade 105 may be used for the thru bolts.

The minimum edge distance from the center of a hole to the free edge of a structural shape or plate shall be 1½" unless noted otherwise.

Bolts and anchor rods shall be snug tightened by a few impacts of an impact wrench or the full force of a worker using an ordinary spud wrench, unless noted otherwise.

All cost associated with fabricating, furnishing, and installing the Traversable Steel Pipe System will be paid for at the contract unit price per lineal foot for Traversable Pipe Grate.

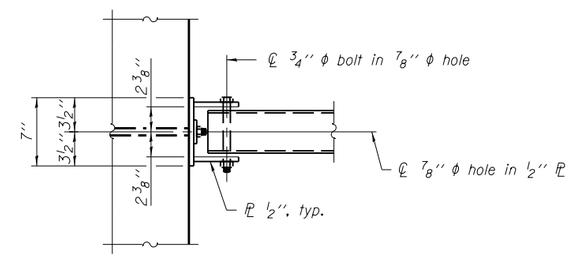

VIEW A-A

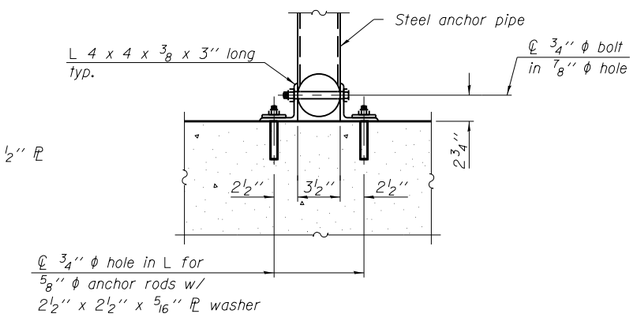

SECTION B-B

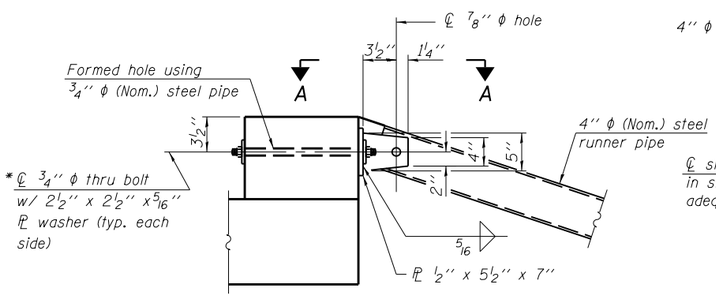

* Bolt shall be tightened per Art. 505.04(f)(2)d of the Standard Specifications.

DETAIL A

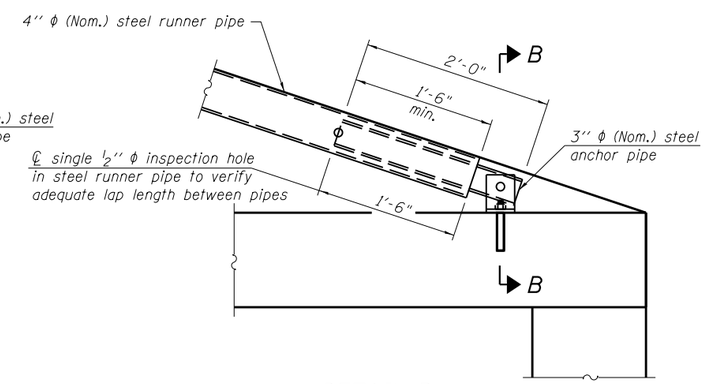

DETAIL B

*** The lap length between pipes may be adjusted in the field to accommodate construction tolerances but shall not be less than 9".

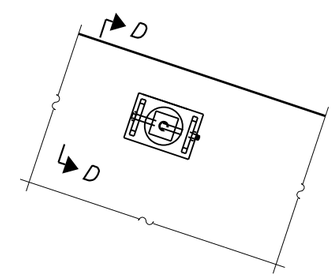

VIEW C-C

(See Detail A for dimensions and details not shown.)

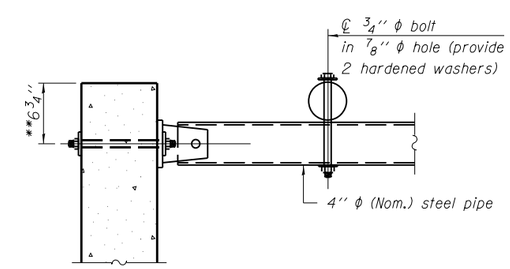

SECTION D-D

** Measured perpendicular to top of culvert wall. In addition, formed hole shall be located a minimum of 6" measured horizontally from any vertical joints necessary for construction of the culvert end section.

FILE NAME = W:\Projects\2010\100120 PTB 157\25\cadd\Structural\Dgn\V10 *3 IL 92 Culverts\Station844+26.26\Final Submittal 13\0320\844+26.26-64H11-005-GratingSystemDtls.dgn

WILLS BURKE KELSEY ASSOCIATES LTD. 116 West Main Street, Suite 201 St. Charles, Illinois 60174	USER NAME = hferstl	DESIGNED - DLS	REVISED -	STATE OF ILLINOIS DEPARTMENT OF TRANSPORTATION	TRAVERSABLE STEEL PIPE SYSTEM – STA. 844+26.26 RT. STRUCTURE NO. 081–0201	F.A.P. RTE.	SECTION	COUNTY	TOTAL SHEETS / SHEET NO.
		CHECKED - AEU	REVISED -			599	(83MFT & 103MFT)W	ROCK ISLAND	340 / 146
	PLOT SCALE =	DRAWN - DLS	REVISED -					CONTRACT NO. 64H11	
	PLOT DATE = 3/20/2013	CHECKED - AEU	REVISED -		SHEET NO. 5 OF 7 SHEETS	FED. ROAD DIST. NO.	ILLINOIS	FED. AID PROJECT	

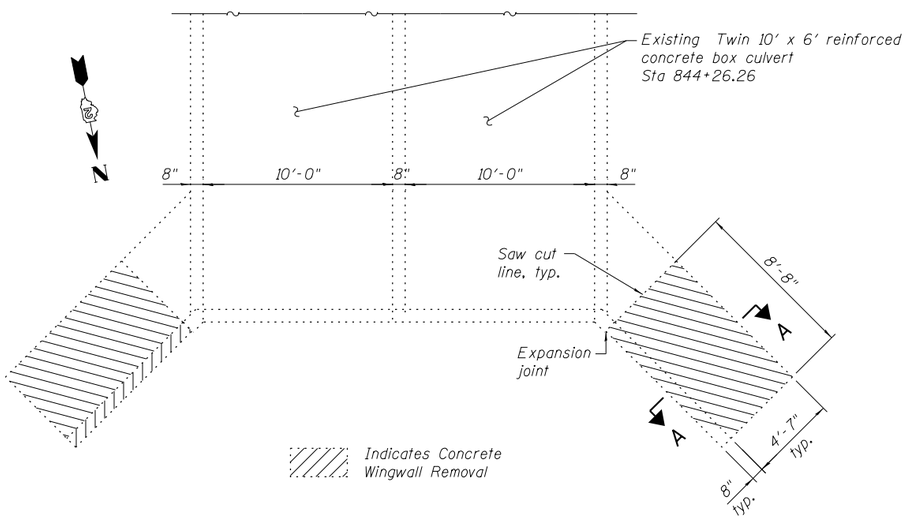

REMOVAL PLAN

Exisitng north end section of twin cell 10' x 6' reinforced concrete box culvert - Sta 844+26.26

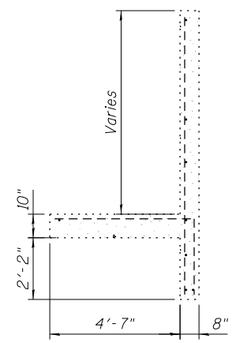

SECTION A-A

Existing reinforced concrete wingwall to be removed

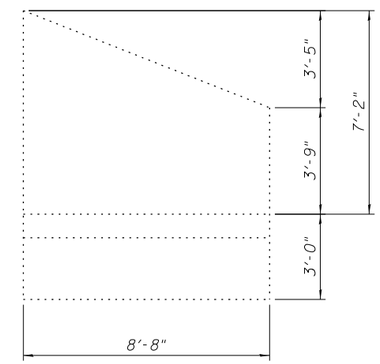

ELEVATION

Existing reinforced concrete wingwall to be removed

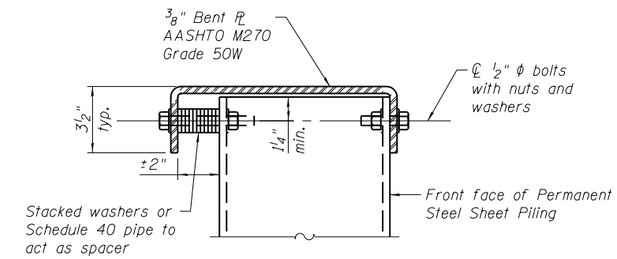

SECTION C-C

Fabricated steel cap

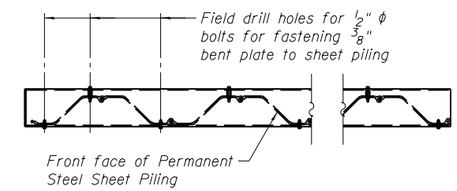

WINGWALL PLAN

Showing connection of fabricated steel cap to Permanent Steel Sheet Piling

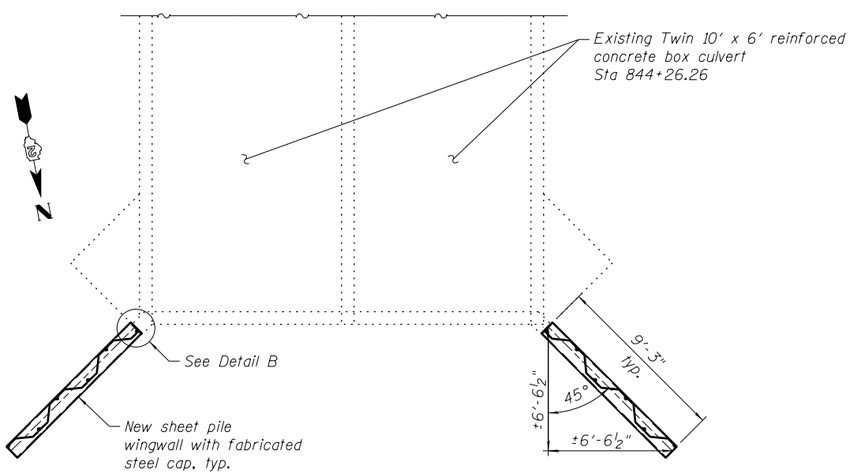

PLAN

Showing new sheet pile wingwalls

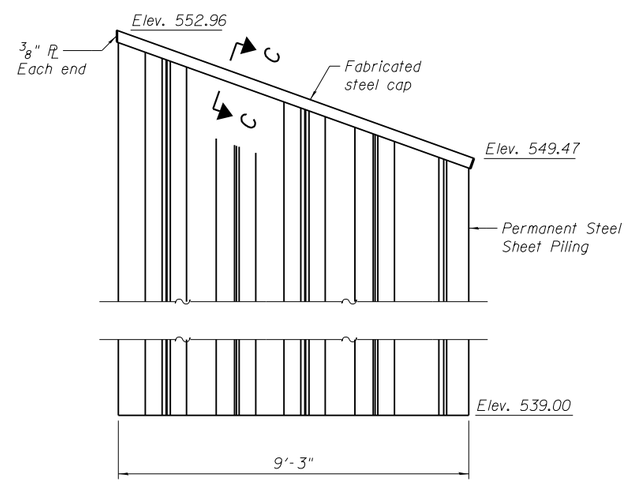

WINGWALL ELEVATION

The sheet piling for the wingwalls shall conform to the special provision Permanent Steel Sheet Piling. The minimum effective section modulus for the Permanent Steel Sheet Piling shall be 3.9 in³/ft.

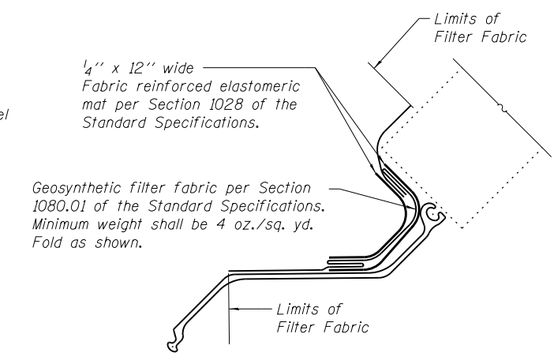

DETAIL B

Note: Fabric reinforced elastomeric mat and geosynthetic filter fabric shall not be paid for separately but shall be included in the cost of Permanent Steel Sheet Piling.

FILE NAME = W:\Projects\2010\100120 PTB 157\25\cadd\Structural\Dgn\WO #3 IL 92 Culverts\Station844+26.26\Final Submittal 12.0220\844+26.26-64H11-006-Sheet2PileWings.dgn

WILLS BURKE KELSEY ASSOCIATES LTD. 116 West Main Street, Suite 201 St. Charles, Illinois 60174	USER NAME = hferstl	DESIGNED - AWH	REVISED -	STATE OF ILLINOIS DEPARTMENT OF TRANSPORTATION	BOX CULVERT END SECTION DETAILS – STA. 844+26.26 LT. STRUCTURE NO. 081-0201
		CHECKED - AEU	REVISED -		
	PLOT SCALE =	DRAWN - AWH	REVISED -		
	PLOT DATE = 3/20/2013	CHECKED - AEU	REVISED -		SHEET NO. 6 OF 7 SHEETS

F.A.P. RTE.	SECTION	COUNTY	TOTAL SHEETS	SHEET NO.
599	(83MFT & 103MFT)W	ROCK ISLAND	340	147
		CONTRACT NO. 64H11		
FED. ROAD DIST. NO.	ILLINOIS	FED. AID PROJECT		

Illinois Department of Transportation
Division of Highways
Illinois Department of Transportation/D-2

SOIL BORING LOG

Page 1 of 1

Date 11/19/03

ROUTE FA 599 DESCRIPTION P92-029-79 Box culvert, IL 92 west of 154th Street LOGGED BY C. Jenkins

SECTION (83MAFT&103MFT)W&RS LOCATION Buffalo Prairie Twp. - NE, SEC. 25, TWP. 17N, RNG. 4W

COUNTY Rock Island DRILLING METHOD Hollow Stem Auger HAMMER TYPE CME-45 Automatic

STRUCT. NO.
Station 844+35

BORING NO. B-1b
Station 844+57
Offset 11.00ft Lt CL
Ground Surface Elev. 556.10 ft

Surface Water Elev. 88.30 ft
Stream Bed Elev. 87.80 ft

Groundwater Elev.:
First Encounter 541.1 ft ▼
Upon Completion 538.1 ft ▽
After ____ Hrs. ____ ft

Description	Elev.	Depth (ft)	Blows (/6")	UCS Qu (tsf)	Moist (%)
GRAVEL					
STIFF brown SILTY LOAM				1.1 P	13.0
	553.60				
STIFF gray/rose SILTY CLAY			4		
			3 7	1.9 S	21.0
	552.10				
MEDIUM gray SILTY LOAM		-5	1		
			2 3	0.8 P	17.0
	549.60				
STIFF gray SILTY CLAY			1		
			2 4	1.3 S	26.0
	547.10				
MEDIUM gray/green SILTY CLAY		-10	2		
			2 4	0.9 S	25.0
	544.60				
MEDIUM gray CLAY			1		
			2 3	0.8 B	29.0
	541.60				
LOOSE brown dirty SAND & GRAVEL		▼-15	8		
			4 5		
	539.10				
VERY DENSE gray/blue SHALE		▽	10		
			14 100/5" PEN		
	537.10				
End of Boring		-20			

The Unconfined Compressive Strength (UCS) Failure Mode is indicated by (B-Bulge, S-Shear, P-Penetrometer)
The SPT (N value) is the sum of the last two blow values in each sampling zone (AASHTO T206)

BBS, from 137 (Rev. 8-99)

Illinois Department of Transportation
Division of Highways
Illinois Department of Transportation/D-2

SOIL BORING LOG

Page 1 of 1

Date 11/19/03

ROUTE FA 599 DESCRIPTION P92-029-79 Box culvert, IL 92 west of 154th Street LOGGED BY C. Jenkins

SECTION (83MAFT&103MFT)W&RS LOCATION Buffalo Prairie Twp. - NE, SEC. 25, TWP. 17N, RNG. 4W

COUNTY Rock Island DRILLING METHOD Hollow Stem Auger HAMMER TYPE CME-45 Automatic

STRUCT. NO.
Station 844+35

BORING NO. B-2b
Station 844+17
Offset 11.00ft Rt CL
Ground Surface Elev. 556.10 ft

Surface Water Elev. 88.30 ft
Stream Bed Elev. 87.80 ft

Groundwater Elev.:
First Encounter 541.1 ft ▼
Upon Completion 539.1 ft ▽
After ____ Hrs. ____ ft

Description	Elev.	Depth (ft)	Blows (/6")	UCS Qu (tsf)	Moist (%)
GRAVEL					
VERY STIFF brown SILTY CLAY				0.4 P	13.0
	553.60				
STIFF brown/tan SILTY LOAM with GRAVEL			5		
			2 3	1.3 S	19.0
	552.10				
MEDIUM gray SILTY LOAM with GRAVEL & ORGANICS		-5	2		
			3 3	0.8 S	22.0
	549.60				
STIFF gray SILTY LOAM with GRAVEL & ORGANICS			2		
			3 4	1.1 S	24.0
	547.10				
MEDIUM gray SILTY LOAM with a SAND lens		-10	1		
			2 3	0.6 B	28.0
	544.60				
SOFT gray SILTY LOAM with ORGANICS and a SAND lens			1		
			1 3	0.4 B	27.0
	541.60				
LOOSE gray SAND & GRAVEL		▼-15	8		
			4 4		
	539.60				
VERY DENSE gray/black SHALE		▽	47		
			53 00/11" PEN		
	537.60				
End of Boring		-20			

The Unconfined Compressive Strength (UCS) Failure Mode is indicated by (B-Bulge, S-Shear, P-Penetrometer)
The SPT (N value) is the sum of the last two blow values in each sampling zone (AASHTO T206)

BBS, from 137 (Rev. 8-99)

FILE NAME = W:\Projects\2010\100120 PTB 157\25\cadd\Structural\Dgn\WO #3 IL 92 Culverts\Station844+26.26\Final Submittal 13\B320\844+26.26-64H11-007-SoilBorings.dgn

WILLS BURKE KELSEY ASSOCIATES LTD.
116 West Main Street, Suite 201
St. Charles, Illinois 60174

USER NAME = hferstl	DESIGNED -	REVISED -	
	CHECKED -	REVISED -	
PLOT SCALE =	DRAWN - AWH	REVISED -	
PLOT DATE = 3/20/2013	CHECKED - AEU	REVISED -	

STATE OF ILLINOIS
DEPARTMENT OF TRANSPORTATION

SOIL BORING LOGS – STA. 844+26.26
STRUCTURE NO. 081-0201

SHEET NO. 7 OF 7 SHEETS

F.A.P. RTE.	SECTION	COUNTY	TOTAL SHEETS	SHEET NO.
599	(83MFT & 103MFT)W	ROCK ISLAND	340	148
		CONTRACT NO. 64H11		
FED. ROAD DIST. NO.	ILLINOIS	FED. AID PROJECT		

Existing Structure: Existing culvert is a 4'x3' RC box culvert with cantilever wingwalls built in 1947 under Section 83. The existing culvert is approximately 62'-2" out to out headwalls. The upstream end of the existing culvert will be extended. One lane of traffic to be maintained at all times utilizing staged construction.

No salvage.

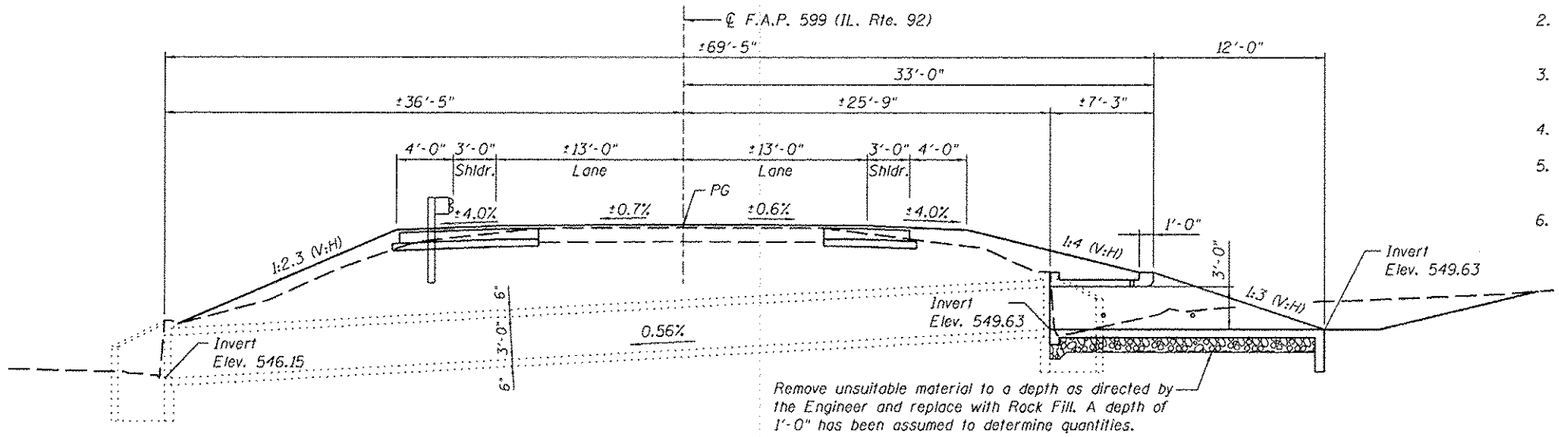

LONGITUDINAL SECTION

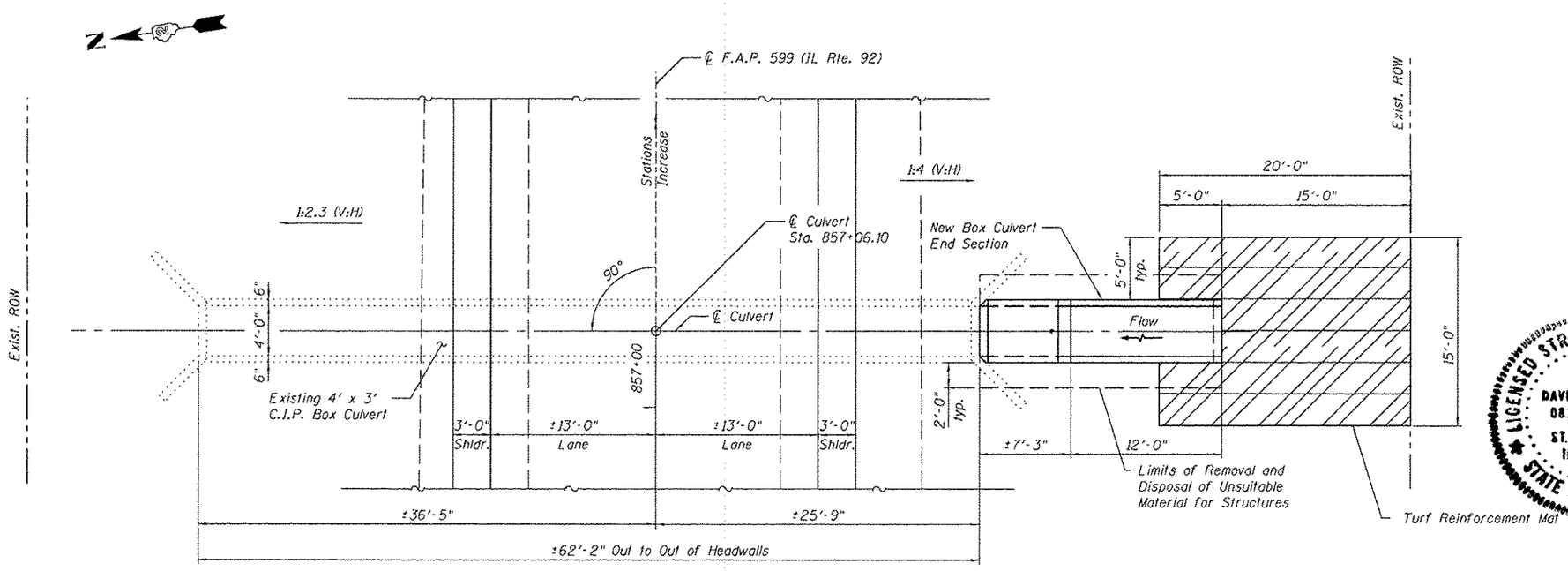

PLAN

GENERAL NOTES

1. Plan dimensions and details have been taken from existing plans or survey/field checks. As such, these dimensions and details are subject to nominal construction variations. The Contractor shall field verify existing dimensions and details affecting new construction and make necessary approved adjustments prior to construction or ordering of materials. Such variations shall not be cause for additional compensation for a change in scope of the work, however, the Contractor will be paid for the quantity actually furnished at the unit price bid for the work.
2. All exposed concrete edges shall be chamfered $^3/_4$" unless noted otherwise. All construction joints shall be bonded.
3. This work shall conform to the requirements of the applicable portions of Sections 501, 503, 505, 508 and 584 of the Standard Specifications.
4. A precast option is not allowed at this location.
5. Drainage holes shall conform to the requirements of Article 503.11 of the Standard Specifications.
6. Nonwoven geotexile fabric shall conform to the requirements of Art. 1080.01 of the Standard Specifications. The minimum weight of the fabric shall be 6 ounces per square yard.

TOTAL BILL OF MATERIAL

ITEM	UNIT	TOTAL
Turf Reinforcement Mat	Sq. Yd.	31
Removal and Disposal of Unsuitable Material for Structures	Cu. Yd.	7
Box Culvert End Sections, Culvert No. 03	Each	1
Traversable Pipe Grate	Foot	10.8
Rock Fill	Ton	12

DESIGN SPECIFICATIONS

2002 AASHTO Bridge Design Specifications

DESIGN STRESSES

FIELD UNITS

f'c = 3,500 psi
fy = 60,000 psi (Reinforcement)

INDEX OF SHEETS

1. General Plan & Elevation
2. Box Culvert End Section
3. Box Culvert End Section Details
4. Traveasable Steel Pipe System

LICENSED STRUCTURAL ENGINEER
DAVID L. SMOOT
081-005861
ST. CHARLES
ILLINOIS
STATE OF ILLINOIS

David L. Smoot
Signature
Date: March 13, 2013
License Expires 11/30/2014

GENERAL PLAN & ELEVATION
ILLINOIS ROUTE 92
F.A.P. RTE 599 - SEC. (83MFT & 103MFT)W
ROCK ISLAND COUNTY
STATION 857+06.10

FILE NAME = W:\Projects\2818\182122 PTB 157\25\cadd\Structural\Dgn\W0 13 IL 92 Culverts\Station857+06.18\Final Submittal 130322\857+06.18-64H11-001-CPE.dgn

WILLS BURKE KELSEY ASSOCIATES LTD.
116 West Main Street, Suite 201
St. Charles, Illinois 60174

USER NAME = nparris	DESIGNED - AWH	REVISED -	
	CHECKED - DLS	REVISED -	
PLOT SCALE =	DRAWN - AWH	REVISED -	
PLOT DATE = 3/21/2013	CHECKED - DLS	REVISED -	

STATE OF ILLINOIS
DEPARTMENT OF TRANSPORTATION

GENERAL PLAN & ELEVATION
STA. 857+06.10
SHEET NO. 1 OF 4 SHEETS

F.A.P. RTE.	SECTION	COUNTY	TOTAL SHEETS	SHEET NO.
599	(83MFT & 103MFT)W	ROCK ISLAND	340	149
		CONTRACT NO. 64H11		
FED. ROAD DIST. NO.	ILLINOIS	FED. AID PROJECT		

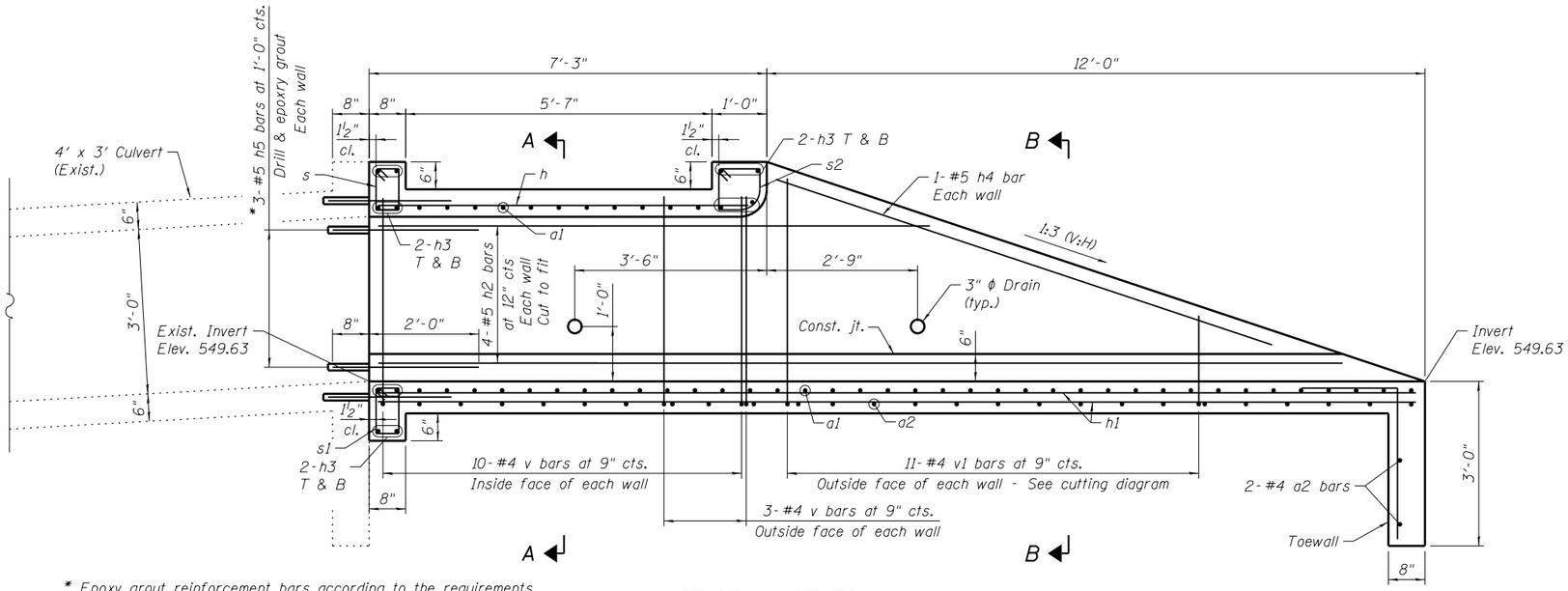

LONGITUDINAL SECTION

* Epoxy grout reinforcement bars according to the requirements of Section 584 of the Standard Specifications. The chemical adhesive system shall be capable of achieving a minimum proof load of 5,000 lb. Cost included in the pay item Box Culvert End Sections, Culvert No. 03.

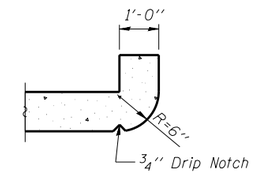

SECTION THRU HEADWALL

(Up Stream End Only)

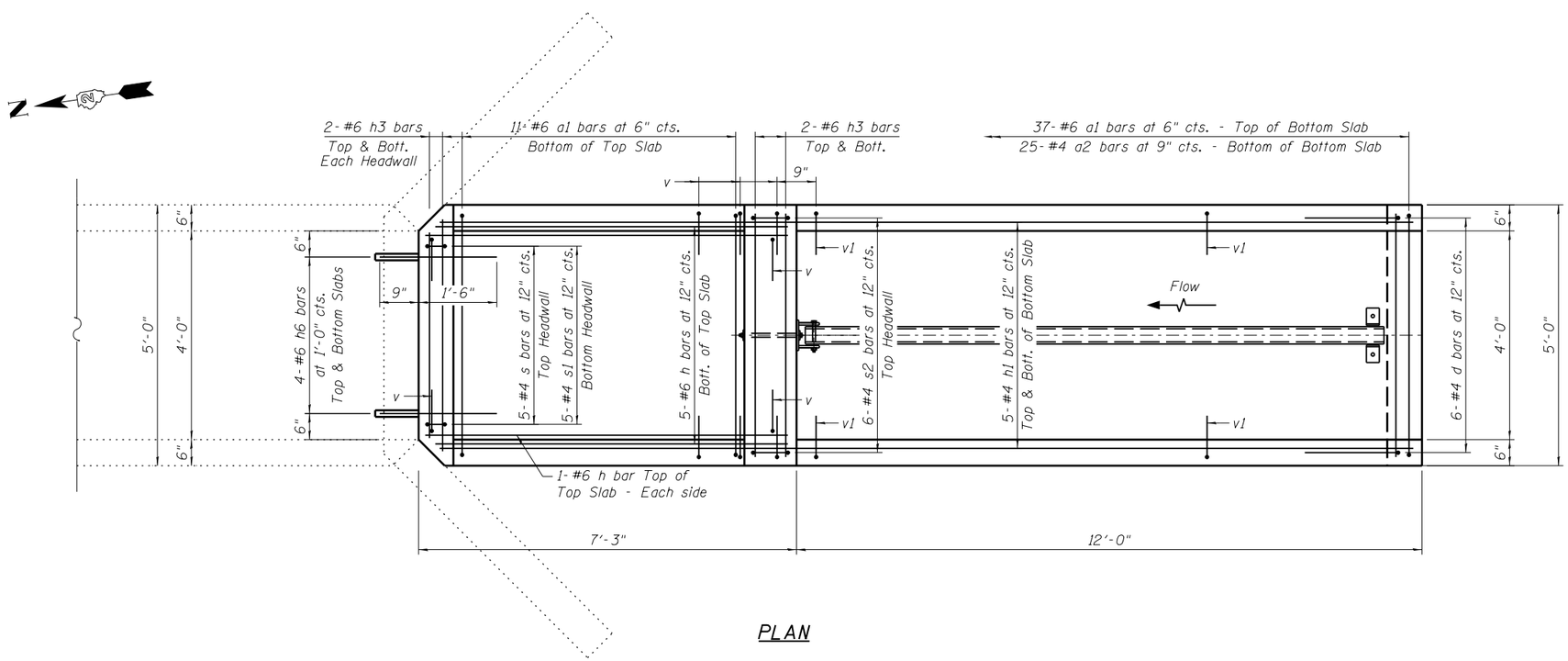

PLAN

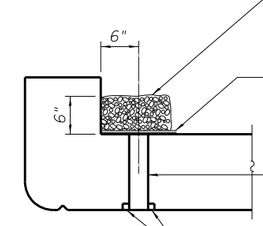

12" x 12" x 6" block of CA5, CA7, or CA11 coarse aggregate placed over drain opening. Block of aggregate shall be completely wrapped in nonwoven geotextile fabric.

Provide a double layer of 12" x 12" nonwoven geotextile fabric centered over the drain hole. Fabric shall be sealed to the concrete with mastic.

3" ϕ PVC drain cast with the concrete (Adjust location to clear reinforcement)

½" Square foam blockout around PVC drain (to be removed with formwork)

DRAIN DETAIL

(All costs associated with furnishing and constructing the above drain details will not be measured for payment but shall be included in the contract unit price for the end section.)

FILE NAME = W:\Projects\2010\100120 PTB 157\25\cadd\Structural\Dgn\WD #3 IL 92 Culverts\Station857+06.10\Final Submittal 13.0320\857+06.10-64H11-002-Extension.dgn

WILLS BURKE KELSEY ASSOCIATES LTD. 116 West Main Street, Suite 201 St. Charles, Illinois 60174	USER NAME = hferstl	DESIGNED - DLS	REVISED -
		CHECKED - AEU	REVISED -
	PLOT SCALE =	DRAWN - DLS	REVISED -
	PLOT DATE = 3/20/2013	CHECKED - AEU	REVISED -

STATE OF ILLINOIS
DEPARTMENT OF TRANSPORTATION

BOX CULVERT END SECTION
STA. 857+06.10 RT.

SHEET NO. 2 OF 4 SHEETS

F.A.P. RTE.	SECTION	COUNTY	TOTAL SHEETS	SHEET NO.
599	(83MFT & 103MFT)W	ROCK ISLAND	340	150
		CONTRACT NO. 64H11		
FED. ROAD DIST. NO.	ILLINOIS	FED. AID PROJECT		

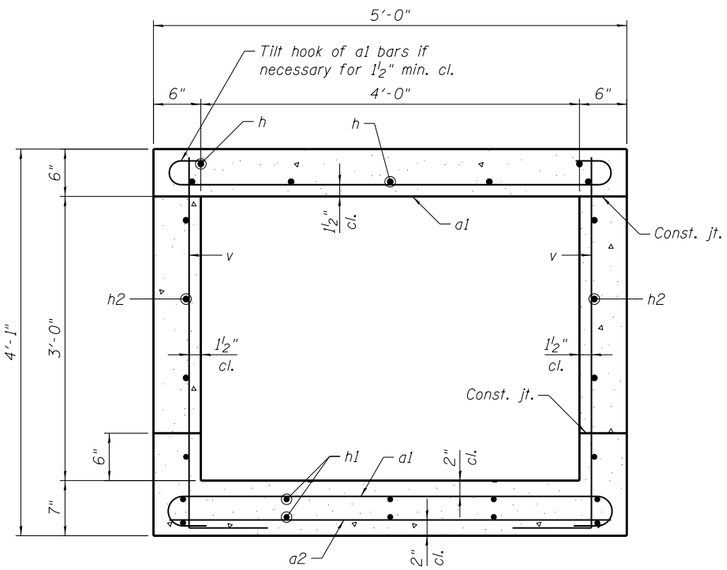

SECTION A-A

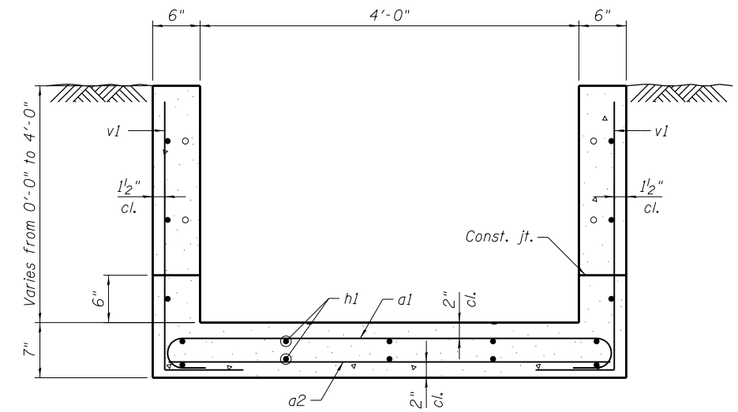

SECTION B-B

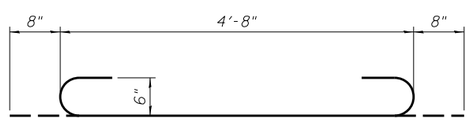

BAR a1

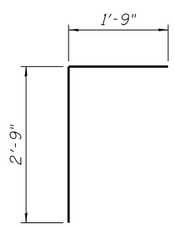

BAR d

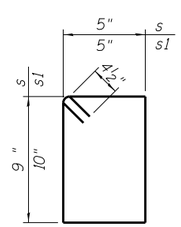

BARS s & s1

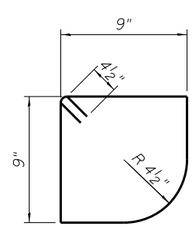

BAR s2

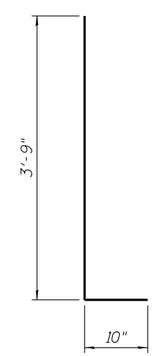

BAR v

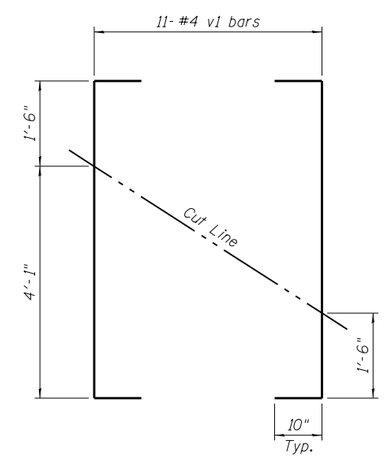

CUTTING DIAGRAM

Order bars full length. Cut as shown and use remainder of bars in opposite wall.

BILL OF MATERIAL

(For Information Only)

Bar	No.	Size	Length	Shape
a1	48	#6	6'-0"	
a2	27	#4	4'-8"	
d	6	#4	4'-6"	
h	7	#6	6'-9"	
h1	10	#4	18'-10"	
h2	8	#5	17'-7"	
h3	12	#6	4'-8"	
h4	2	#5	9'-6"	
h5	6	#5	2'-8"	
h6	8	#6	2'-3"	
s	5	#4	3'-1"	
s1	5	#4	3'-3"	
s2	6	#4	3'-7"	
v	26	#4	4'-7"	
v1	11	#4	7'-3"	

Description	Unit	Quantity
Concrete Box Culverts	Cu. Yd.	5.0
Reinforcement Bars	Pound	1,200

FILE NAME = W:\Projects\2010\100120 PTB 157\25\cadd\Structural\Dgn\WO #3 IL 92 Culverts\Station857+06.10\Final Submittal 13.0320\857+06.10-64H11-003-ExtensionDetls.dgn

WILLS BURKE KELSEY ASSOCIATES LTD.
116 West Main Street, Suite 201
St. Charles, Illinois 60174

USER NAME = hferstl	DESIGNED - DLS	REVISED -
	CHECKED - AEU	REVISED -
PLOT SCALE =	DRAWN - DLS	REVISED -
PLOT DATE = 3/20/2013	CHECKED - AEU	REVISED -

STATE OF ILLINOIS
DEPARTMENT OF TRANSPORTATION

BOX CULVERT END SECTION DETAILS
STA. 857+06.10 RT.

SHEET NO. 3 OF 4 SHEETS

F.A.P. RTE.	SECTION	COUNTY	TOTAL SHEETS	SHEET NO.
599	(83MFT & 103MFT)W	ROCK ISLAND	340	151
		CONTRACT NO. 64H11		
FED. ROAD DIST. NO.	ILLINOIS	FED. AID PROJECT		

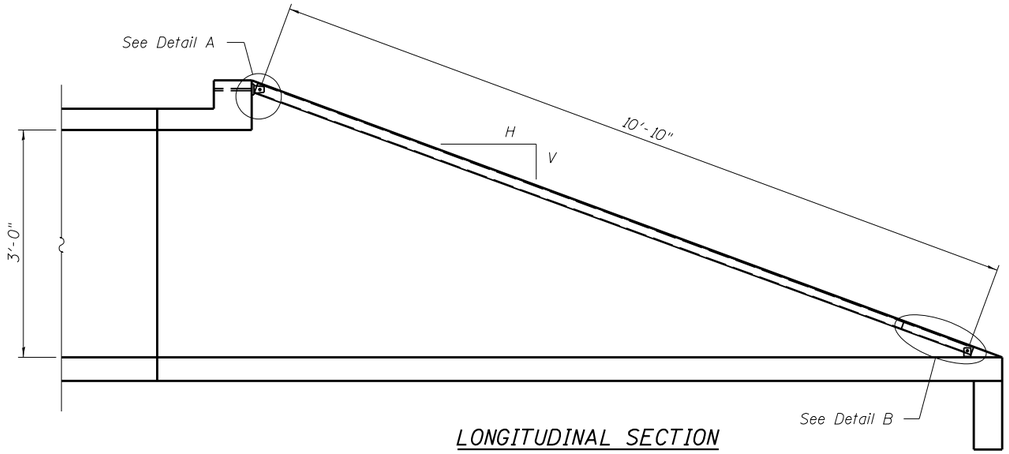

LONGITUDINAL SECTION

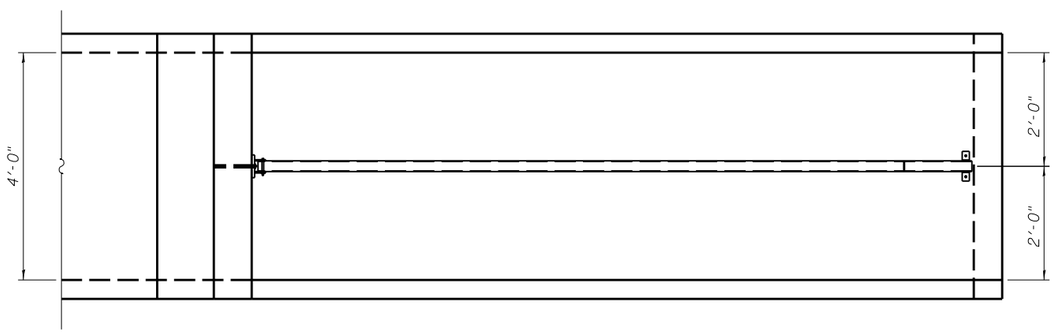

PLAN VIEW

GENERAL NOTES

Length shall be determined by the Contractor. All steel pipe shall be standard weight (Sch. 40) unless otherwise noted.

Traversable Steel Pipe System details shown for Box Culvert End Sections. Traversable Steel Pipe System details for other culvert end sections similar.

All components of the Traversable Steel Pipe System shall be galvanized according to the requirements of AASHTO M 111 or M 232 as applicable.

Fabrication of the Traversable Steel Pipe System shall conform to the requirements in Section 505 of the Standard Specifications unless noted otherwise.

Structural steel shapes and plates shall conform to the requirements of Article 1006.04 of the Standard Specifications. Steel pipes shall conform to the requirements of ASTM A 53 (Type E or S), Grade B.

Anchor rods shall conform to the requirements of ASTM F1554, Grade 105. Anchor rods shall be drilled and epoxy grouted according to the requirements of Section 584 of the Standard Specifications. The chemical adhesive system shall be capable of achieving a minimum proof load of 5000 pounds and an ultimate shear capacity of 8000 pounds per anchor.

Bolts and thru bolts shall conform to the requirements of Article 1006.08 of the Standard Specifications except threaded rods conforming to the requirements of ASTM F1554, Grade 105 may be used for the thru bolts.

The minimum edge distance from the center of a hole to the free edge of a structural shape or plate shall be 1 1/2 '' unless noted otherwise.

Bolts and anchor rods shall be snug tightened by a few impacts of an impact wrench or the full force of a worker using an ordinary spud wrench unless otherwise noted.

All cost associated with fabricating, furnishing, and installing the Traversable Steel Pipe System will be paid for at the contract unit price per lineal foot for Traversable Pipe Grate.

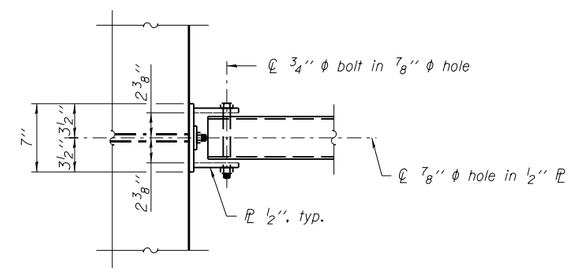

VIEW A-A

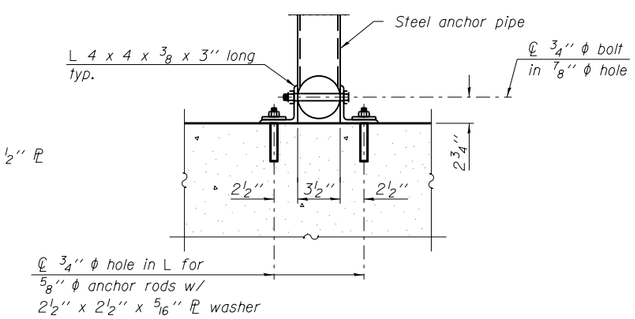

SECTION B-B

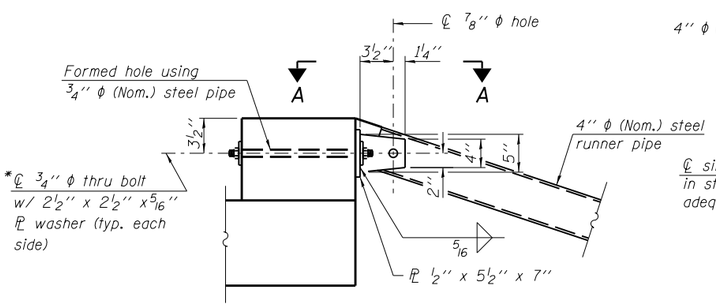

*Bolt shall be tightened per Art. 505.04(f)(2)d of the Standard Specifications

DETAIL A

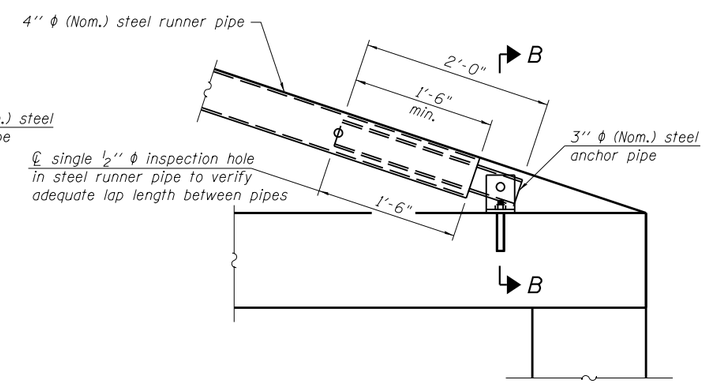

DETAIL B

*** The lap length between pipes may be adjusted in the field to accommodate construction tolerances but shall not be less than 9''.

FILE NAME = W:\Projects\2010\100120 PTB 157-25\cadd\Structural\Dgn\WO #3 IL 92 Culverts\Station857+06.10\Final Submittal 13\0320\857+06.10-64H11-004-GratingSystemDtls.dgn

WILLS BURKE KELSEY ASSOCIATES LTD. 116 West Main Street, Suite 201 St. Charles, Illinois 60174	USER NAME = hferstl	DESIGNED - DLS	REVISED -	STATE OF ILLINOIS DEPARTMENT OF TRANSPORTATION	TRAVERSABLE STEEL PIPE SYSTEM STA. 857+06.10 RT.	F.A.P. RTE.	SECTION	COUNTY	TOTAL SHEETS / SHEET NO.
		CHECKED - AEU	REVISED -			599	(83MFT & 103MFT)W	ROCK ISLAND	340 / 152
	PLOT SCALE =	DRAWN - DLS	REVISED -					CONTRACT NO. 64H11	
	PLOT DATE = 3/20/2013	CHECKED - AEU	REVISED -		SHEET NO. 4 OF 4 SHEETS	FED. ROAD DIST. NO.	ILLINOIS	FED. AID PROJECT	

Existing Structure: Existing culvert is a 6'x5' RC box culvert with vetical cantilever wingwalls built in 1947 under Section 83. The existing culvert is approximately 63'-8" out to out headwalls. The upstream end of the existing culvert will be extended. At the downstream end, the existing concrete wingwalls will be removed and replaced with sheet pile wingwalls. One lane of traffic to be maintained at all times utilizing staged construction.

No salvage.

DESIGN SPECIFICATIONS

2002 AASHTO Bridge Design Specifications

DESIGN STRESSES

FIELD UNITS

f'c = 3,500 psi
fy = 60,000 psi (Reinforcement)
fu = 38,500 psi (Permanent Sheet Piling)
fy = 50,000 psi (AASHTO M270, Grade 50W)

SECTION A-A

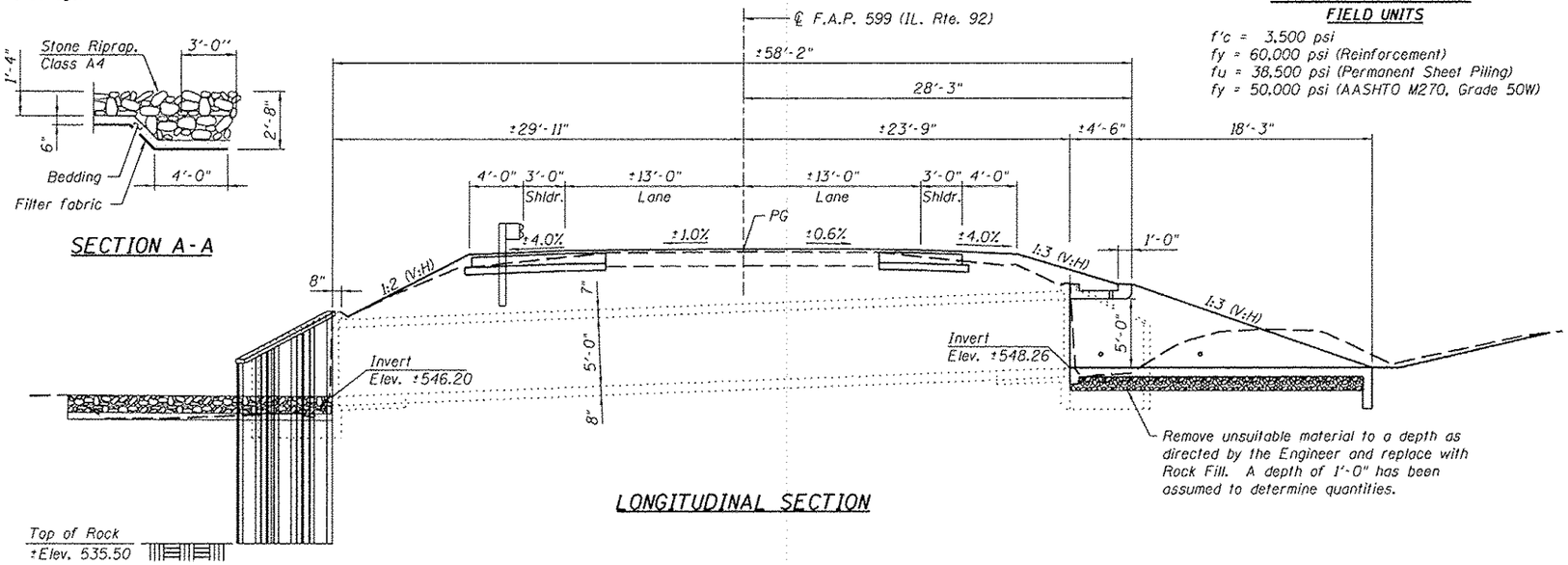

LONGITUDINAL SECTION

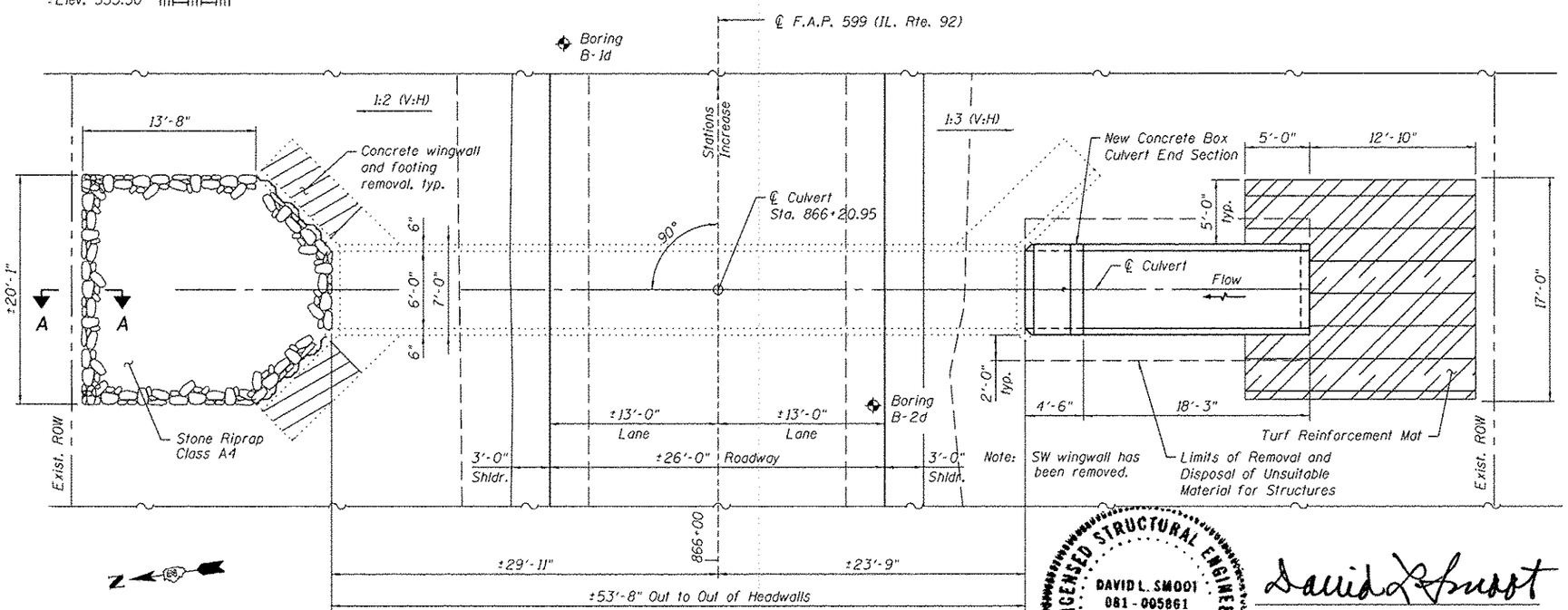

PLAN

GENERAL NOTES

1. Plan dimensions and details have been taken from existing plans or survey/field checks. As such, these dimensions and details are subject to nominal construction variations. The Contractor shall field verify existing dimensions and details affecting new construction and make necessary approved adjustments prior to construction or ordering of materials. Such variations shall not be cause for additional compensation for a change in scope of the work, however, the Contractor will be paid for the quantity actually furnished at the unit price bid for the work.
2. The sheet piling for the wingwalls shall conform to the special provision Permanent Steel Sheet Piling. The minimum effective section modulus for the Permanent Steel Sheet Piling shall be 3.3 in^3/ft.
3. The fabricated steel cap shall be AASHTO M270 Grade 50W. The cap, bolts, nuts and washers shall not be paid for separately, but shall be included in the cost for Permanent Steel Sheet Piling.
4. Fasteners shall be AASHTO M164 Type 3.
5. New coarse aggregate shall be placed behind the existing headwall for the full length of the headwall and shall be 12" wide by 6" high. The coarse aggregate shall be gradation CA 7 or CA 11 material. This item shall not be paid for separately, but shall be included in the cost of Concrete Wingwall Removal.
6. All exposed concrete edges shall be chamfered $^3/_4$" unless noted otherwise. All construction joints shall be bonded.
7. This work shall conform to the requirements of the applicable portions of Sections 501, 503, 505, 508 and 584 of the Standard Specifications.
8. A precast option is not allowed at this location.
9. Drainage holes shall conform to the requirements of Article 503.11 of the Standard Specifications.
10. Nonwoven geotextile fabric shall conform to the requirements of Art. 1080.01 of the Standard Specifications. The minimum weight of the fabric shall be 6 ounces per square yard.

TOTAL BILL OF MATERIAL

ITEM	UNIT	TOTAL
Turf Reinforcement Mat	Sq. Yd.	30
Stone Riprap, Class A4	Sq. Yd.	41
Filter Fabric	Sq. Yd.	41
Removal and Disposal of Unsuitable Material for Structures	Cu. Yd.	10
Box Culvert End Section, Culvert No. 04	Each	1
Concrete Wingwall Removal	Each	2
Permanent Steel Sheet Piling	Sq. Ft.	278
Traversable Pipe Grate	Foot	34.8
Rock Fill	Ton	17

INDEX OF SHEETS

1. General Plan & Elevation
2. Box Culvert End Section
3. Box Culvert End Section Details
4. Traversable Steel Pipe System
5. Box Culvert End Section Details
6. Soil Boring Logs

LICENSED STRUCTURAL ENGINEER
DAVID L. SMOOT
081-005861
ST. CHARLES
ILLINOIS
STATE OF ILLINOIS

David L. Smoot
Signature
Date: March 13, 2013
License Expires 11/30/2014

GENERAL PLAN & ELEVATION
ILLINOIS ROUTE 92
F.A.P. RTE 599 - SEC. (83MFT & 103MFT)W
ROCK ISLAND COUNTY
STATION 866+20.95
STRUCTURE NO. 081-1054

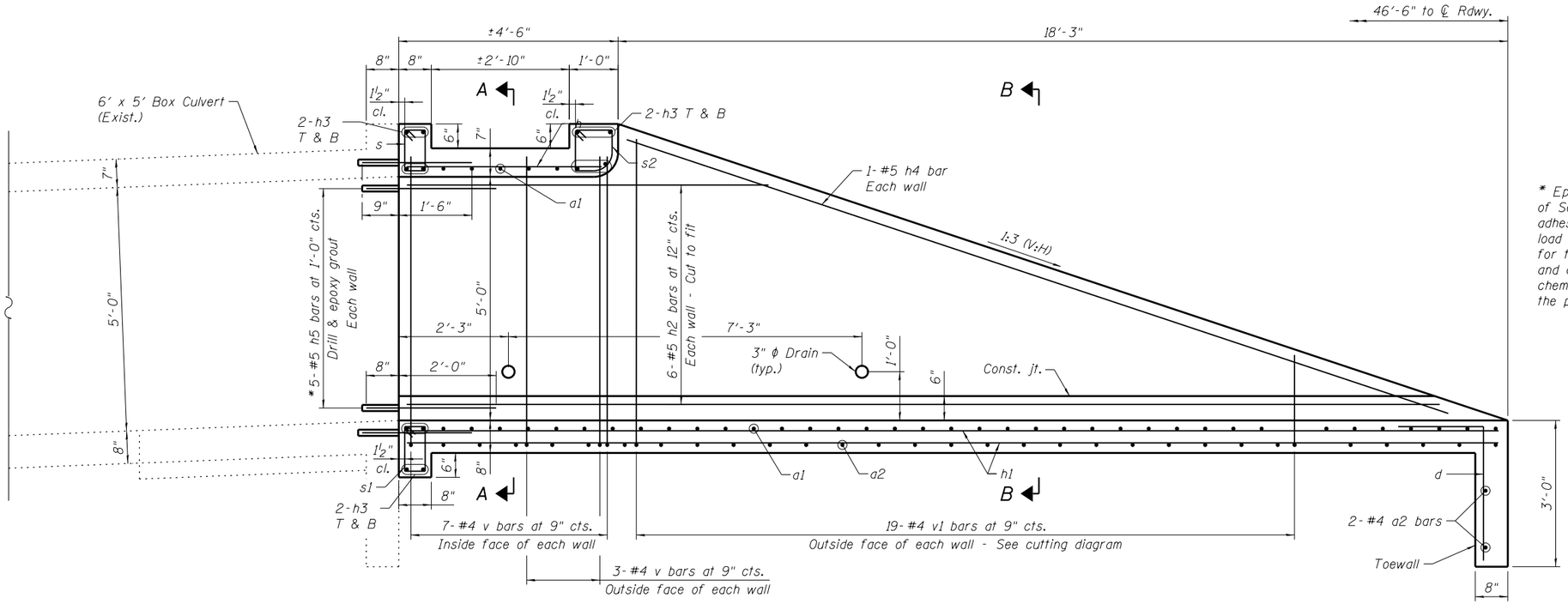

LONGITUDINAL SECTION

* Epoxy grout reinforcement bars according to the requirements of Section 584 of the Standard Specifications. The chemical adhesive system shall be capable of achieving a minimum proof load of 5,000 lb. A depth of embedment of 9" has been assumed for the #6 bars and 8" for the #5 bars to determine bar lengths and quantities. The actual depth will be dependent on the selected chemical adhesive and approval of the Engineer. Cost included in the pay item Box Culvert End Sections, Culvert No. 04.

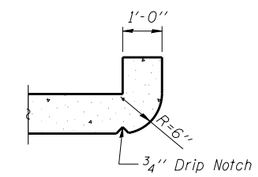

SECTION THRU HEADWALL

(Up Stream End Only)

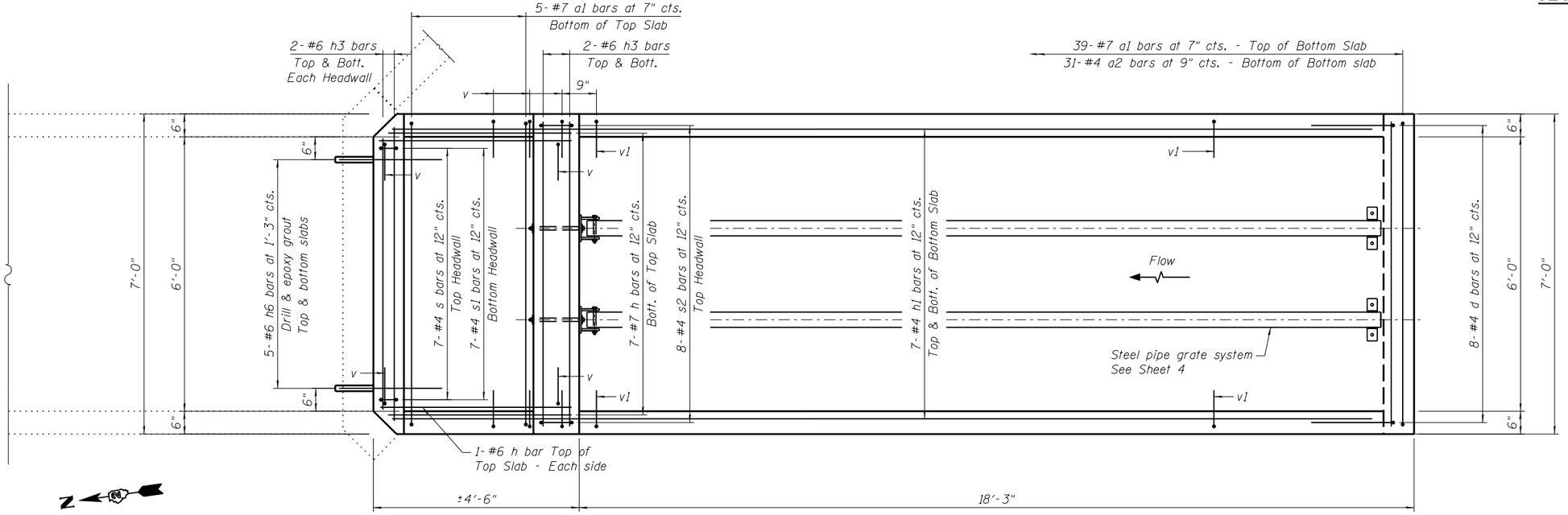

PLAN

WILLS BURKE KELSEY ASSOCIATES LTD. 116 West Main Street, Suite 201 St. Charles, Illinois 60174	USER NAME = hferstl	DESIGNED - DLS	REVISED -
		CHECKED - AEU	REVISED -
	PLOT SCALE =	DRAWN - DLS	REVISED -
	PLOT DATE = 3/20/2013	CHECKED - AEU	REVISED -

STATE OF ILLINOIS
DEPARTMENT OF TRANSPORTATION

BOX CULVERT END SECTION – STA. 866+20.95 RT.
STRUCTURE NO. 081-1054

SHEET NO. 2 OF 6 SHEETS

F.A.P. RTE.	SECTION	COUNTY	TOTAL SHEETS	SHEET NO.
599	(83MFT & 103MFT)W	ROCK ISLAND	340	154
		CONTRACT NO. 64H11		
FED. ROAD DIST. NO.	ILLINOIS	FED. AID PROJECT		

FILE NAME = W:\Projects\2010\100120 PTB 157-25\cadd\Structural\Dgn\WO #3 IL 92 Culverts\Station866+20.95\Final Submittal 12.0220\866+20.95-64H11-002-GradedExtension.dgn

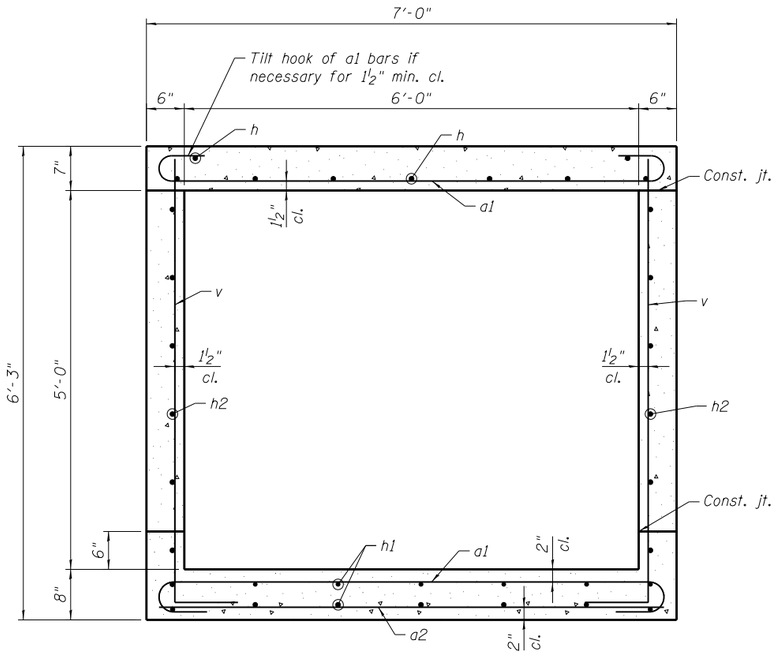

SECTION A-A

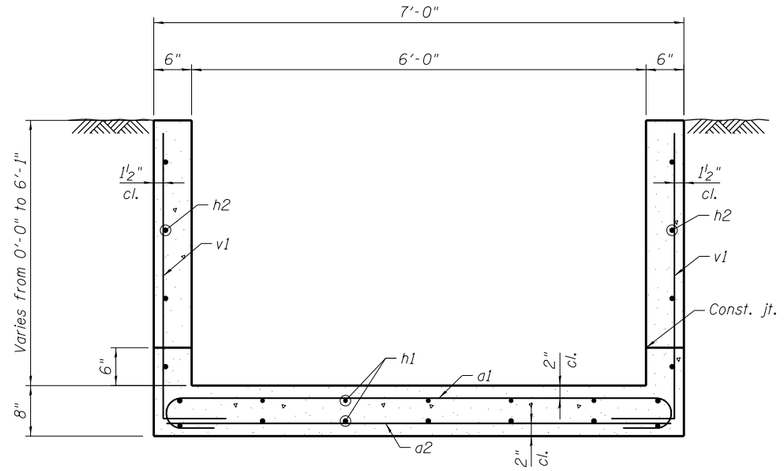

SECTION B-B

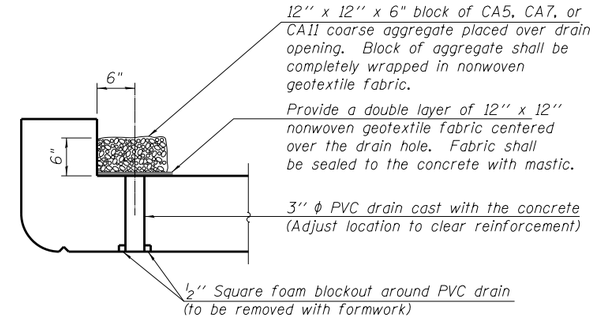

DRAIN DETAIL

(All costs associated with furnishing and constructing the above drain details will not be measured for payment but shall be included in the contract unit price for the end section.)

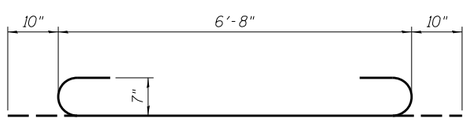

BAR a1

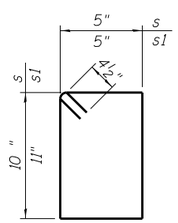

BARS s & s1

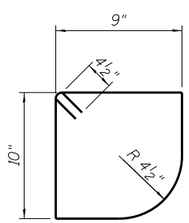

BAR s2

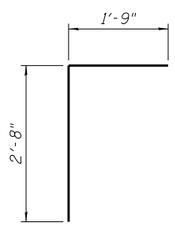

BAR d

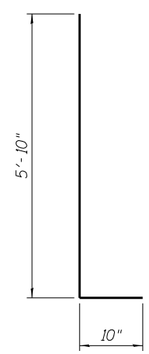

BAR v

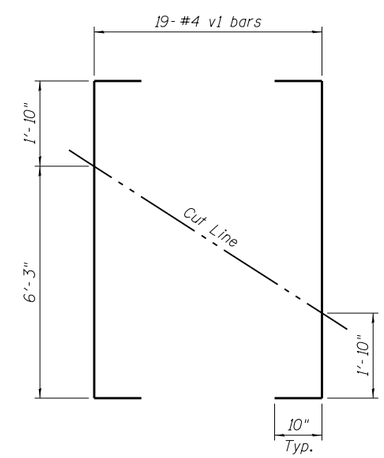

CUTTING DIAGRAM

Order bars full length. Cut as shown and use remainder of bars in opposite wall.

BILL OF MATERIAL

(For Information Only)

Bar	No.	Size	Length	Shape
a1	44	#7	8'-4"	
a2	33	#4	6'-8"	
d	8	#4	4'-5"	
h	9	#7	4'-0"	
h1	14	#4	22'-5"	
h2	12	#5	20'-9"	
h3	12	#6	6'-8"	
h4	2	#5	17'-9"	
h5	10	#5	2'-8"	
h6	10	#6	2'-3"	
s	7	#4	3'-3"	
s1	7	#4	3'-5"	
s2	8	#4	3'-9"	
v	20	#4	6'-8"	
v1	19	#4	9'-9"	

Description	Unit	Quantity
Concrete Box Culverts	Cu. Yd.	8.1
Reinforcement Bars	Pound	1,950

FILE NAME = W:\Projects\2010\100120 PTB 157\25\cadd\Structural\Dgn\WO #3 IL 92 Culverts\Station866+20.95\Final Submittal 13.0320\866+20.95-64H11-003-ExtensionDetls.dgn

WILLS BURKE KELSEY ASSOCIATES LTD.
116 West Main Street, Suite 201
St. Charles, Illinois 60174

USER NAME = hferstl	DESIGNED - DLS	REVISED -
	CHECKED - AEU	REVISED -
PLOT SCALE =	DRAWN - DLS	REVISED -
PLOT DATE = 3/20/2013	CHECKED - AEU	REVISED -

STATE OF ILLINOIS
DEPARTMENT OF TRANSPORTATION

BOX CULVERT END SECTIONS DETAILS – STA. 866+20.95 RT.
STRUCTURE NO. 081-1054

SHEET NO. 3 OF 6 SHEETS

F.A.P. RTE.	SECTION	COUNTY	TOTAL SHEETS	SHEET NO.
599	(83MFT & 103MFT)W	ROCK ISLAND	340	155
		CONTRACT NO. 64H11		
FED. ROAD DIST. NO.	ILLINOIS	FED. AID PROJECT		

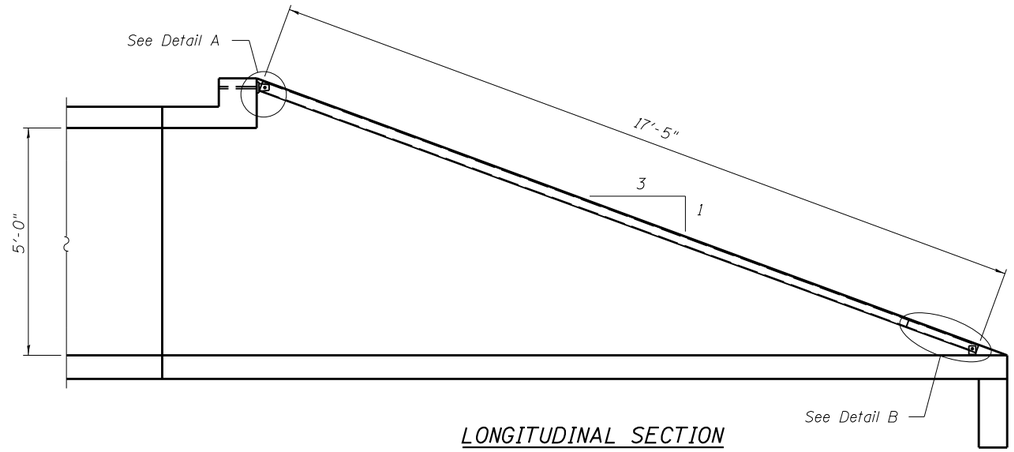

LONGITUDINAL SECTION

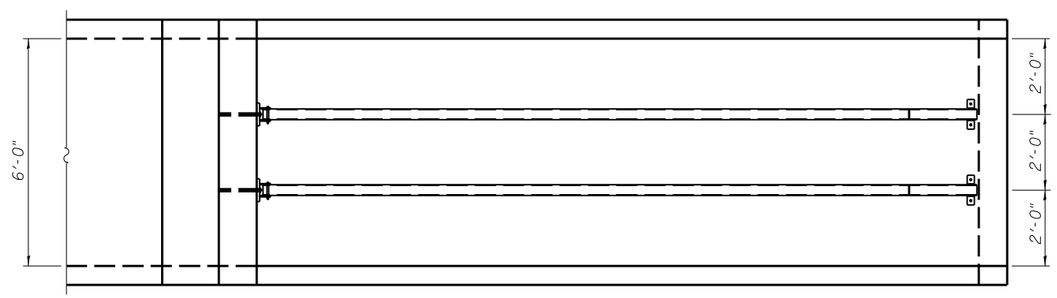

PLAN VIEW

GENERAL NOTES

Length shall be determined by the Contractor. All steel pipe shall be standard weight (Sch. 40) unless otherwise noted.

Traversable Steel Pipe System details shown for Box Culvert End Sections. Traversable Steel Pipe System details for other culvert end sections similar.

All components of the Traversable Steel Pipe System shall be galvanized according to the requirements of AASHTO M 111 or M 232 as applicable.

Fabrication of the Traversable Steel Pipe System shall conform to the requirements in Section 505 of the Standard Specifications unless noted otherwise.

Structural steel shapes and plates shall conform to the requirements of Article 1006.04 of the Standard Specifications. Steel pipes shall conform to the requirements of ASTM A 53 (Type E or S), Grade B.

Anchor rods shall conform to the requirements of ASTM F1554, Grade 105. Anchor rods shall be drilled and epoxy grouted according to the requirements of Section 584 of the Standard Specifications. The chemical adhesive system shall be capable of achieving a minimum proof load of 5000 pounds and an ultimate shear capacity of 8000 pounds per anchor.

Bolts and thru bolts shall conform to the requirements of Article 1006.08 of the Standard Specifications except threaded rods conforming to the requirements of ASTM F1554, Grade 105 may be used for the thru bolts.

The minimum edge distance from the center of a hole to the free edge of a structural shape or plate shall be 1½" unless noted otherwise.

Bolts and anchor rods shall be snug tightened by a few impacts of an impact wrench or the full force of a worker using an ordinary spud wrench unless otherwise noted.

All cost associated with fabricating, furnishing, and installing the Traversable Steel Pipe System will be paid for at the contract unit price per lineal foot for Traversable Pipe Grate.

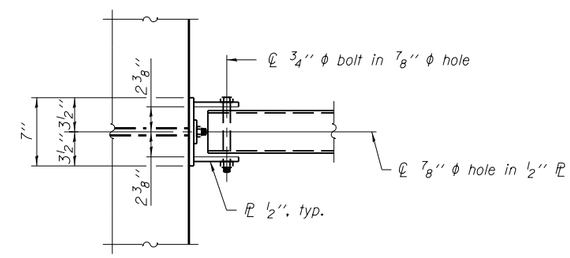

VIEW A-A

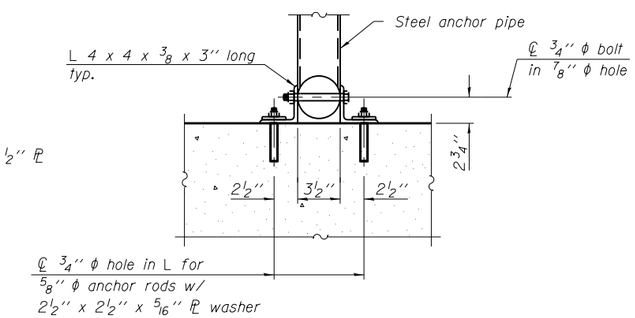

SECTION B-B

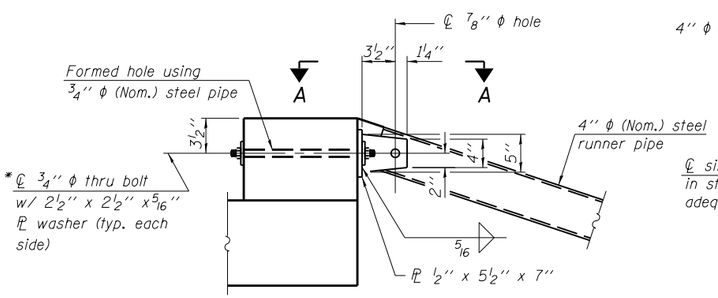

* Bolt shall be tightened per Art. 505.04(f)(2)d of the Standard Specifications.

DETAIL A

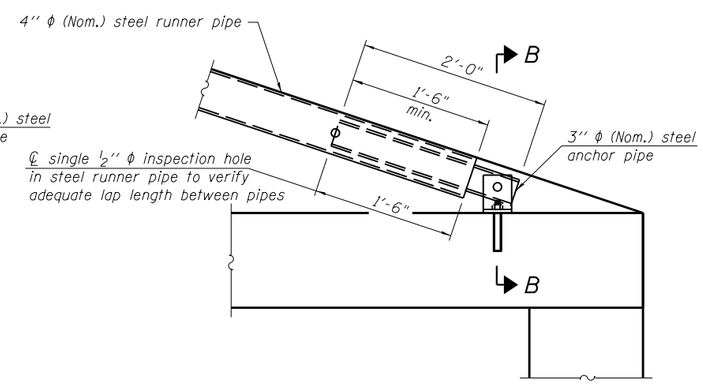

DETAIL B

*** The lap length between pipes may be adjusted in the field to accommodate construction tolerances but shall not be less than 9".

FILE NAME = W:\Projects\2010\100120 PTB 157-25\cadd\Structural\Dgn\WO #3 IL 92 Culverts\Station866+20.95\Final Submittal 13.0320\866+20.95-64H11-004-GratingSystemDtls.dgn

WILLS BURKE KELSEY ASSOCIATES LTD. 116 West Main Street, Suite 201 St. Charles, Illinois 60174	USER NAME = hferstl	DESIGNED - DLS	REVISED -	STATE OF ILLINOIS DEPARTMENT OF TRANSPORTATION	TRAVERSABLE STEEL PIPE SYSTEM – STA. 866+20.95 RT. STRUCTURE NO. 081-1054	F.A.P. RTE.	SECTION	COUNTY	TOTAL SHEETS	SHEET NO.
		CHECKED - AEU	REVISED -			599	(83MFT & 103MFT)W	ROCK ISLAND	340	156
	PLOT SCALE =	DRAWN - DLS	REVISED -					CONTRACT NO. 64H11		
	PLOT DATE = 3/20/2013	CHECKED - AEU	REVISED -		SHEET NO. 4 OF 6 SHEETS	FED. ROAD DIST. NO.	ILLINOIS	FED. AID PROJECT		

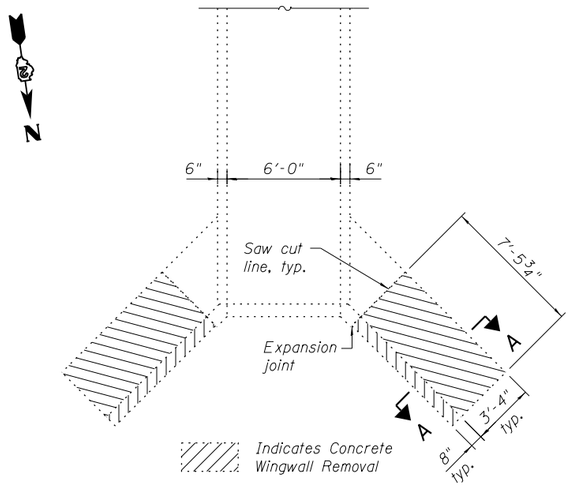

REMOVAL PLAN

Existing south end section of 6' x 5' reinforced concrete box culvert - Sta 866+20.95

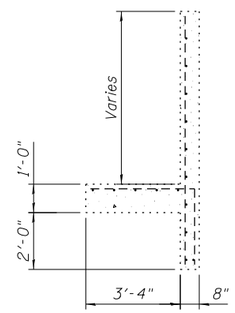

SECTION A-A

Existing reinforced concrete wingwall to be removed

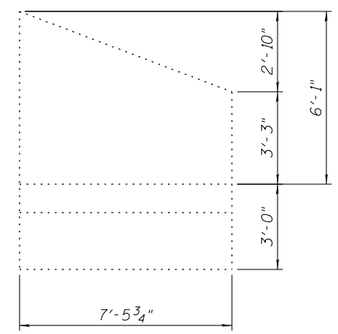

ELEVATION

Existing reinforced concrete wingwall to be removed

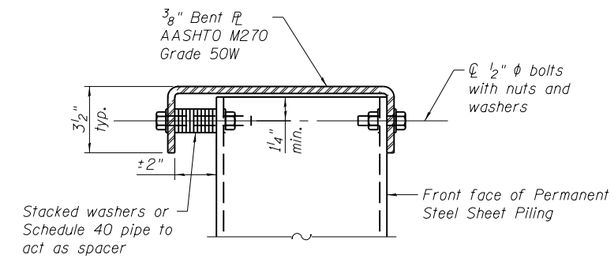

SECTION C-C

Fabricated steel cap

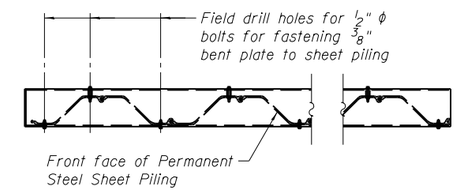

WINGWALL PLAN

Showing connection of fabricated steel cap to Permanent Steel Sheet Piling

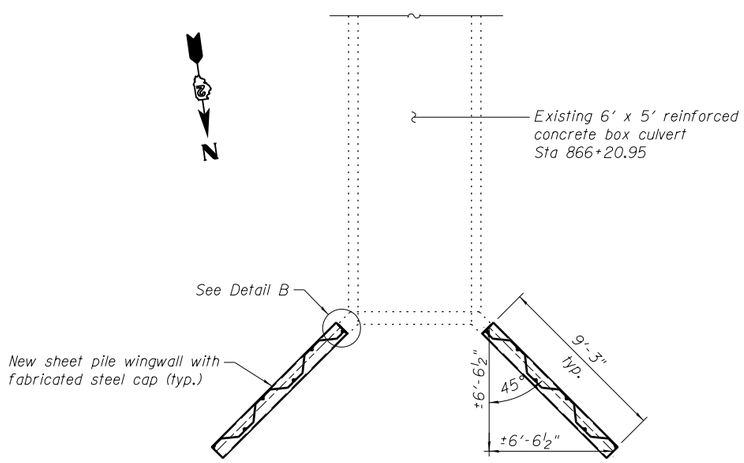

PLAN

Showing new sheet pile wingwalls

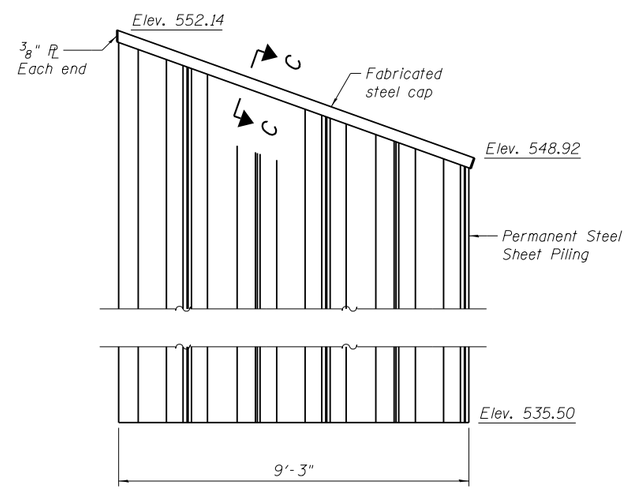

WINGWALL ELEVATION

The sheet piling for the wingwalls shall conform to the special provision Permanent Steel Sheet Piling. The minimum effective section modulus for the Permanent Steel Sheet Piling shall be 3.3 in³/ft.

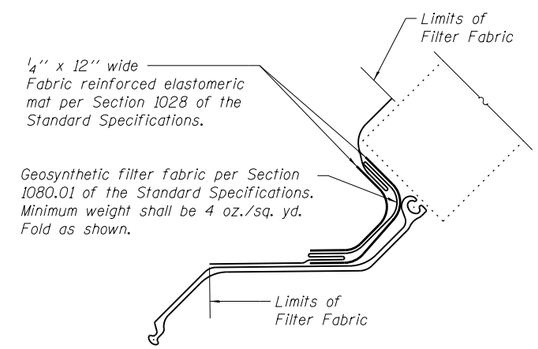

DETAIL B

Note: Fabric reinforced elastomeric mat and geosynthetic filter fabric shall not be paid for separately but shall be included in the cost of Permanent Steel Sheet Piling.

FILE NAME = W:\Projects\2018\180120 PTB 157\25\cadd\Structural\Dgn\WO #3 IL 92 Culverts\Station866+20.95\Final Submittal 12.0220\866+20.95-64H11-0005-Sh-FieldWings.dgn

WBK WILLS BURKE KELSEY ASSOCIATES LTD. 116 West Main Street, Suite 201 St. Charles, Illinois 60174	USER NAME = hferstl	DESIGNED - DLS	REVISED -	STATE OF ILLINOIS DEPARTMENT OF TRANSPORTATION	BOX CULVERT END SECTION DETAILS – STA. 866+20.95 LT. STRUCTURE NO. 081-1054	F.A.P. RTE. 599	SECTION (83MFT & 103MFT)W	COUNTY ROCK ISLAND	TOTAL SHEETS 340	SHEET NO. 157
		CHECKED - AEU	REVISED -					CONTRACT NO. 64H11		
	PLOT SCALE =	DRAWN - DLS	REVISED -			FED. ROAD DIST. NO.	ILLINOIS	FED. AID PROJECT		
	PLOT DATE = 3/20/2013	CHECKED - AEU	REVISED -		SHEET NO. 5 OF 6 SHEETS					

Illinois Department of Transportation
Division of Highways
Illinois Department of Transportation/D-2

SOIL BORING LOG

Page 1 of 1

Date 11/17/03

ROUTE FA 599 DESCRIPTION P92-029-79 Box culvert, IL 92 west of 154th Street LOGGED BY C. Jenkins

SECTION (83MAFT&103MFT)W&RS LOCATION Buffalo Prairie Twp. - NE, SEC. 25, TWP. 17N, RNG. 4W

COUNTY Rock Island DRILLING METHOD Hollow Stem Auger HAMMER TYPE CME-45 Automatic

STRUCT. NO.
Station 866+25

BORING NO. B-1d
Station 866+40
Offset 12.00ft Lt CL
Ground Surface Elev. 556.50 ft

Surface Water Elev. None ft
Stream Bed Elev. 88.40 ft

Groundwater Elev.:
First Encounter 541.5 ft
Upon Completion 537.0 ft
After ____ Hrs. ____ ft

Description	Elev.	Depth (ft)	Blows (/6")	UCS Qu (tsf)	Moist (%)
GRAVEL					
VERY STIFF brown SILTY LOAM				2.4 P	13.0
	554.00				
VERY STIFF gray/brown SILTY LOAM			2		
			5	2.9 B	16.0
	552.50		7		
		-5			
VERY STIFF gray/brown SILTY CLAY			5		
			7	3.1 S	18.0
	550.00		8		
STIFF brown SILTY LOAM			2		
			3	1.1 B	21.0
	547.50		3		
		-10			
MEDIUM brown/gray SILTY LOAM			1		
			2	0.5 S	21.0
	545.00		4		
MEDIUM brown/gray SILTY LOAM			1		
			1	0.7 B	23.0
	542.50		3		
		-15			
MEDIUM brown/gray SILTY LOAM with SAND lenses			1		
			1	0.5 P	22.0
	539.50		2		
No sample			1		
			1		
	537.50		2		
		-20			
MEDIUM blue/gray SHALE under SAND & GRAVEL lens			1		
			5		
	535.00		9		
VERY DENSE gray SHALE			16		
			84		
			100/10"		
	532.00		PEN		
End of Boring		-25			
		-30			
		-35			
		-40			

The Unconfined Compressive Strength (UCS) Failure Mode is indicated by (B-Bulge, S-Shear, P-Penetrometer)
The SPT (N value) is the sum of the last two blow values in each sampling zone (AASHTO T206)

BBS, from 137 (Rev. 8-99)

Illinois Department of Transportation
Division of Highways
Illinois Department of Transportation/D-2

SOIL BORING LOG

Page 1 of 1

Date 11/19/03

ROUTE FA 599 DESCRIPTION P92-029-79 Box culvert, IL 92 west of 154th Street LOGGED BY C. Jenkins

SECTION (83MAFT&103MFT)W&RS LOCATION Buffalo Prairie Twp. - NE, SEC. 25, TWP. 17N, RNG. 4W

COUNTY Rock Island DRILLING METHOD Hollow Stem Auger HAMMER TYPE CME-45 Automatic

STRUCT. NO.
Station 866+25

BORING NO. B-2d
Station 866+12
Offset 12.00ft Rt CL
Ground Surface Elev. 556.50 ft

Surface Water Elev. None ft
Stream Bed Elev. 88.40 ft

Groundwater Elev.:
First Encounter 544.0 ft
Upon Completion 540.0 ft
After ____ Hrs. ____ ft

Description	Elev.	Depth (ft)	Blows (/6")	UCS Qu (tsf)	Moist (%)
GRAVEL					
MEDIUM black/gray SILTY LOAM				0.8 P	16.0
	554.00				
STIFF gray SILTY LOAM			2		
			4	1.9 S	9.0
	552.50		5		
		-5			
STIFF gray SILTY CLAY with GRAVEL and a SILT lens			3		
			3	1.6 P	19.0
	550.00		4		
STIFF gray SILTY CLAY TILL			1		
			3	1.2 S	20.0
	547.50		7		
		-10			
MEDIUM gray SILTY CLAY TILL over a SAND & GRAVEL lens			2		
			2	0.6 B	24.0
			5		
	544.50				
No sample			1		
			1		
	542.50		2		
		-15			
STIFF rose/pink SANDY CLAY LOAM			2		
			2	1.0 B	
	540.00		3		
VERY DENSE gray SHALE	538.50		100/1" PEN		
End of Boring					
		-20			

The Unconfined Compressive Strength (UCS) Failure Mode is indicated by (B-Bulge, S-Shear, P-Penetrometer)
The SPT (N value) is the sum of the last two blow values in each sampling zone (AASHTO T206)

BBS, from 137 (Rev. 8-99)

FILE NAME = W:\Projects\2010\10120 PTB 157\25\cadd\Structural\Dgn\WD #3 IL 92 Culverts\Station866+20.95\Final Submittal 13.0320\866+20.95-64H11-006-SoilBorings.dgn

WILLS BURKE KELSEY ASSOCIATES LTD.
116 West Main Street, Suite 201
St. Charles, Illinois 60174

USER NAME = hferstl	DESIGNED -	REVISED -	
	CHECKED -	REVISED -	
PLOT SCALE =	DRAWN - AWH	REVISED -	
PLOT DATE = 3/20/2013	CHECKED - AEU	REVISED -	

STATE OF ILLINOIS
DEPARTMENT OF TRANSPORTATION

SOIL BORING LOGS – STA. 866+20.95
STRUCTURE NO. 081-1054
SHEET NO. 6 OF 6 SHEETS

F.A.P. RTE.	SECTION	COUNTY	TOTAL SHEETS	SHEET NO.
599	(83MFT & 103MFT)W	ROCK ISLAND	340	158
		CONTRACT NO. 64H11		
FED. ROAD DIST. NO.	ILLINOIS	FED. AID PROJECT		

Existing Structure: Existing culvert is a 6'x6' RC box culvert with vertical cantilever wingwalls built in 1947 under Section 83. The existing culvert is approximately 50'-7" out to out headwalls. The upstream end of the existing culvert will be extended. At the downstream end, the existing concrete wingwalls will be removed and replaced with sheet pile wingwalls. One lane of traffic to be maintained at all times utilizing staged construction.

No salvage.

DESIGN SPECIFICATIONS

2002 AASHTO Bridge Design Specifications

DESIGN STRESSES

FIELD UNITS

f'c = 3,500 psi
fy = 60,000 psi (Reinforcement)
fu = 38,500 psi (Permanent Sheet Piling)
fy = 50,000 psi (AASHTO M270, Grade 50W)

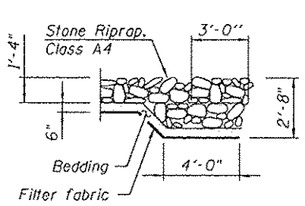

SECTION A-A

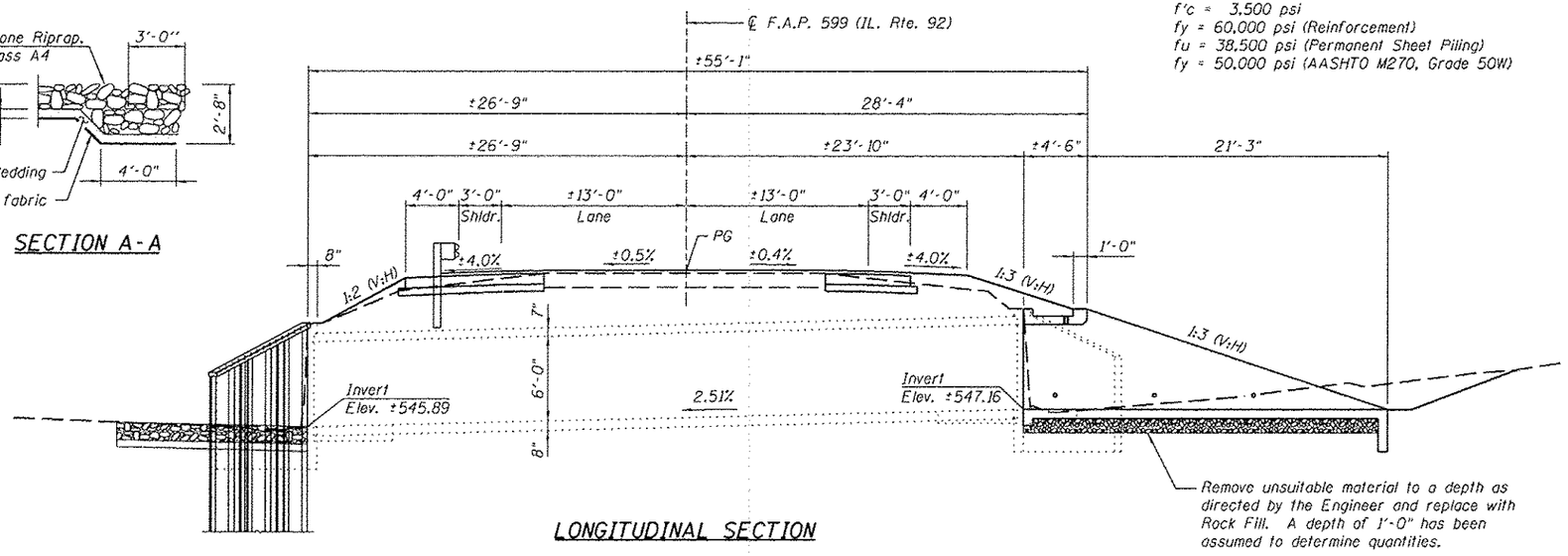

LONGITUDINAL SECTION

Top of Rock
±Elev. 535.10

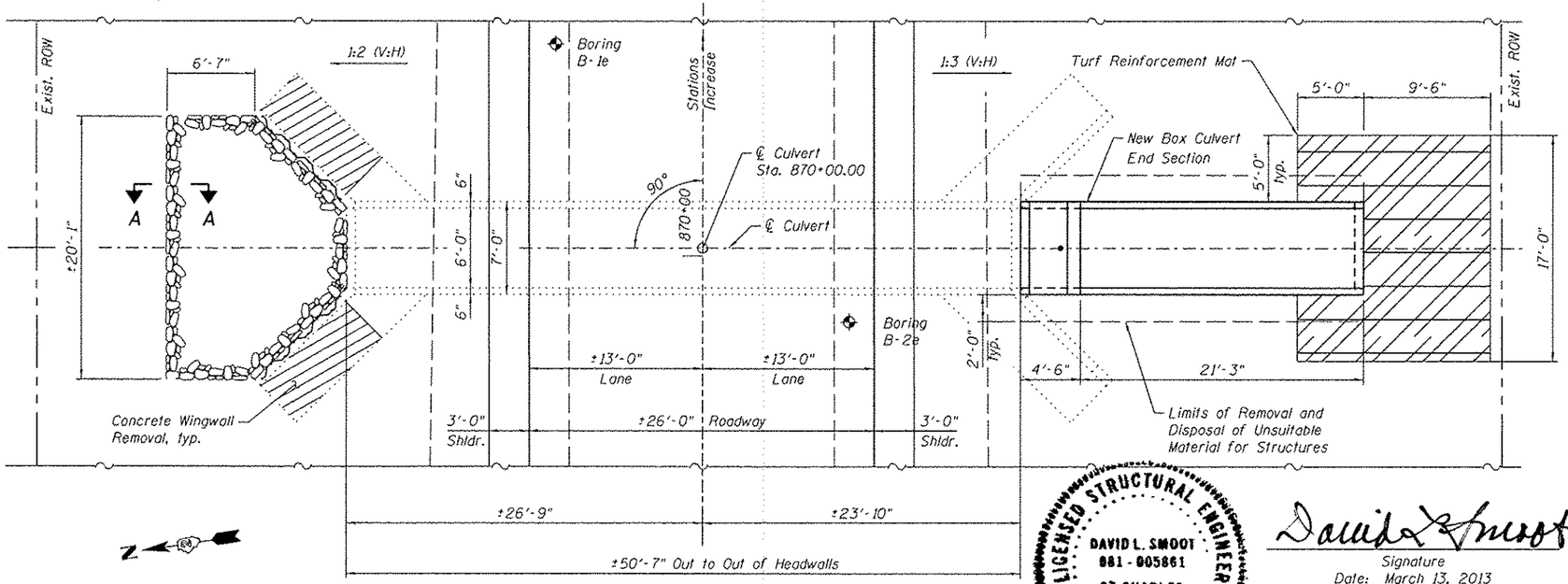

PLAN

GENERAL NOTES

1. Plan dimensions and details have been taken from existing plans or survey/field checks. As such, these dimensions and details are subject to nominal construction variations. The Contractor shall field verify existing dimensions and details affecting new construction and make necessary approved adjustments prior to construction or ordering of materials. Such variations shall not be cause for additional compensation for a change in scope of the work, however, the Contractor will be paid for the quantity actually furnished at the unit price bid for the work.
2. The sheet piling for the wingwalls shall conform to the special provision Permanent Steel Sheet Piling. The minimum effective section modulus for the Permanent Steel Sheet Piling shall be 3.9 in^3/ft.
3. The fabricated steel cap shall be AASHTO M270 Grade 50W. The cap, bolts, nuts and washers shall not be paid for separately, but shall be included in the cost for Permanent Steel Sheet Piling.
4. Fasteners shall be AASHTO M164 Type 3.
5. New coarse aggregate shall be placed behind the existing headwall for the full length of the headwall and shall be 12" wide by 6" high. The coarse aggregate shall be gradation CA 7 or CA 11 material. This item shall not be paid for separately, but shall be included in the cost of Concrete Wingwall Removal.
6. All exposed concrete edges shall be chamfered ¾" unless noted otherwise. All construction joints shall be bonded.
7. This work shall conform to the requirements of the applicable portions of Sections 501, 503, 505, 508 and 584 of the Standard Specifications.
8. A precast option is not allowed at this location.
9. Drainage holes shall conform to the requirements of Article 503.11 of the Standard Specifications.
10. Nonwoven geotextile fabric shall conform to the requirements of Art. 1080.01 of the Standard Specifications. The minimum weight of the fabric shall be 6 ounces per square yard.

TOTAL BILL OF MATERIAL

ITEM	UNIT	TOTAL
Turf Reinforcement Mat	Sq. Yd.	24
Stone Riprap, Class A4	Sq. Yd.	25
Filter Fabric	Sq. Yd.	25
Removal and Disposal of Unsuitable Material for Structures	Cu. Yd.	11
Box Culvert End Section, Culvert No. 05	Each	1
Concrete Wingwall Removal	Each	2
Permanent Steel Sheet Piling	Sq. Ft.	286
Traversable Pipe Grate	Foot	47.2
Rock Fill	Ton	19

INDEX OF SHEETS

1. General Plan & Elevation
2. Box Culvert End Section
3. Box Culvert End Section Details
4. Traversable Steel Pipe System
5. Box Culvert End Section Details
6. Soil Boring Logs

LICENSED STRUCTURAL ENGINEER
DAVID L. SMOOT
081-005861
ST. CHARLES
ILLINOIS
STATE OF ILLINOIS

David L. Smoot
Signature
Date: March 13, 2013
License Expires 11/30/2014

GENERAL PLAN & ELEVATION
ILLINOIS ROUTE 92
F.A.P. RTE 599 - SEC. (83MFT & 103MFT)W
ROCK ISLAND COUNTY
STATION 870+00.00
STRUCTURE NO. 081-1053

WBK WILLS BURKE KELSEY ASSOCIATES LTD.
116 West Main Street, Suite 201
St. Charles, Illinois 60174

USER NAME = ppeters	DESIGNED - AWH	REVISED -	
	CHECKED - DLS	REVISED -	
PLOT SCALE =	DRAWN - AWH	REVISED -	
PLOT DATE = 3/21/2013	CHECKED - DLS	REVISED -	

STATE OF ILLINOIS
DEPARTMENT OF TRANSPORTATION

GENERAL PLAN & ELEVATION – STA. 870+00.00
STRUCTURE NO. 081-1053

SHEET NO. 1 OF 6 SHEETS

F.A.P. RTE.	SECTION	COUNTY	TOTAL SHEETS	SHEET NO.
599	(83MFT & 103MFT)W	ROCK ISLAND	340	159
		CONTRACT NO. 64H11		
FED. ROAD DIST. NO.	ILLINOIS	FED. AID PROJECT		

FILE NAME = W:\Projects\2010\2012B PTB 157\25\cadd\Structural\Dgn\V10 *3 IL 92 Culverts\Station870+00.00\Final Submittal 13.0320\870+00.00-64H11-B21.DGN

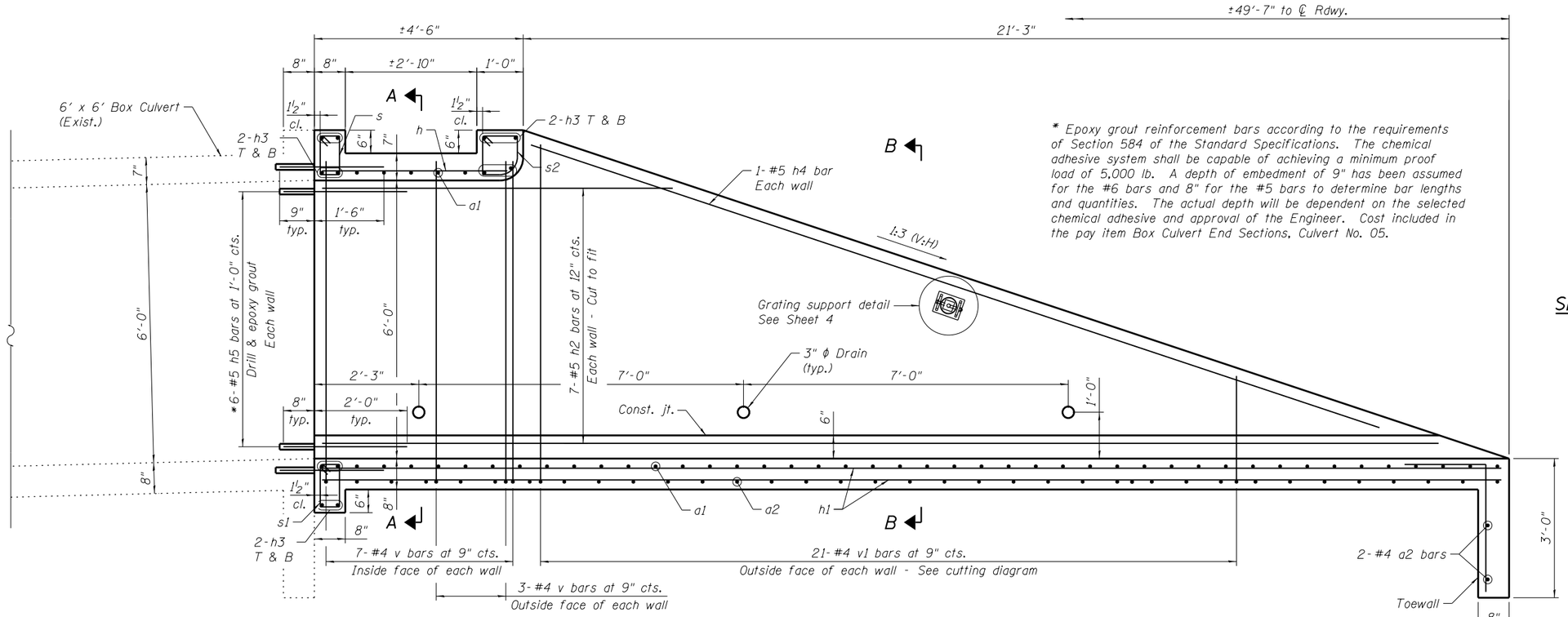

* Epoxy grout reinforcement bars according to the requirements of Section 584 of the Standard Specifications. The chemical adhesive system shall be capable of achieving a minimum proof load of 5,000 lb. A depth of embedment of 9" has been assumed for the #6 bars and 8" for the #5 bars to determine bar lengths and quantities. The actual depth will be dependent on the selected chemical adhesive and approval of the Engineer. Cost included in the pay item Box Culvert End Sections, Culvert No. 05.

LONGITUDINAL SECTION

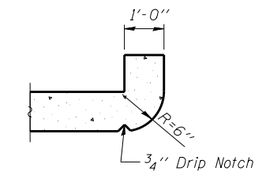

SECTION THRU HEADWALL

(Up Stream End Only)

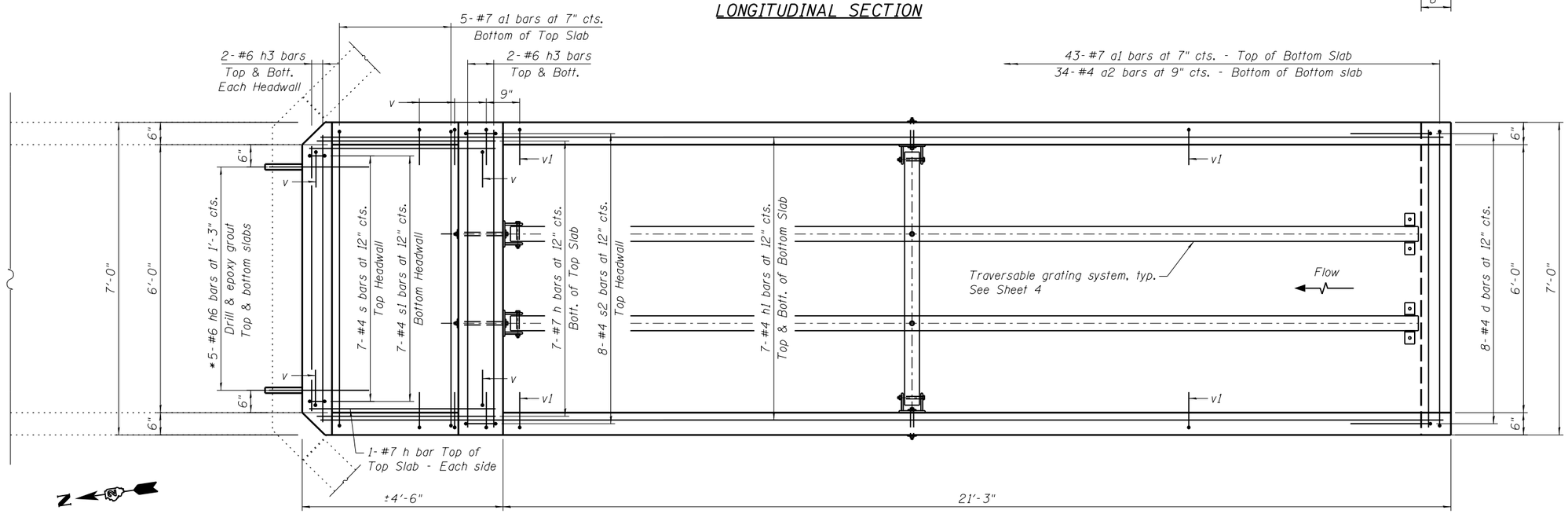

PLAN

FILE NAME = W:\Projects\2010\100120 PTB 157\25\cadd\Structural\Dgn\WO #3 IL 92 Culverts\Station870+00.00\Final Submittal 13\0320\870-00.00-64H11-002-GradedExtension.dgn

WILLS BURKE KELSEY ASSOCIATES LTD. 116 West Main Street, Suite 201 St. Charles, Illinois 60174	USER NAME = hferstl	DESIGNED - DLS	REVISED -	STATE OF ILLINOIS DEPARTMENT OF TRANSPORTATION	BOX CULVERT END SECTION – STA. 870+00.00 RT. STRUCTURE NO. 081-1053
		CHECKED - AEU	REVISED -		
	PLOT SCALE =	DRAWN - DLS	REVISED -		
	PLOT DATE = 3/20/2013	CHECKED - AEU	REVISED -		SHEET NO. 2 OF 6 SHEETS

F.A.P. RTE.	SECTION	COUNTY	TOTAL SHEETS	SHEET NO.
599	(83MFT & 103MFT)W	ROCK ISLAND	340	160
		CONTRACT NO. 64H11		
FED. ROAD DIST. NO.	ILLINOIS	FED. AID PROJECT		

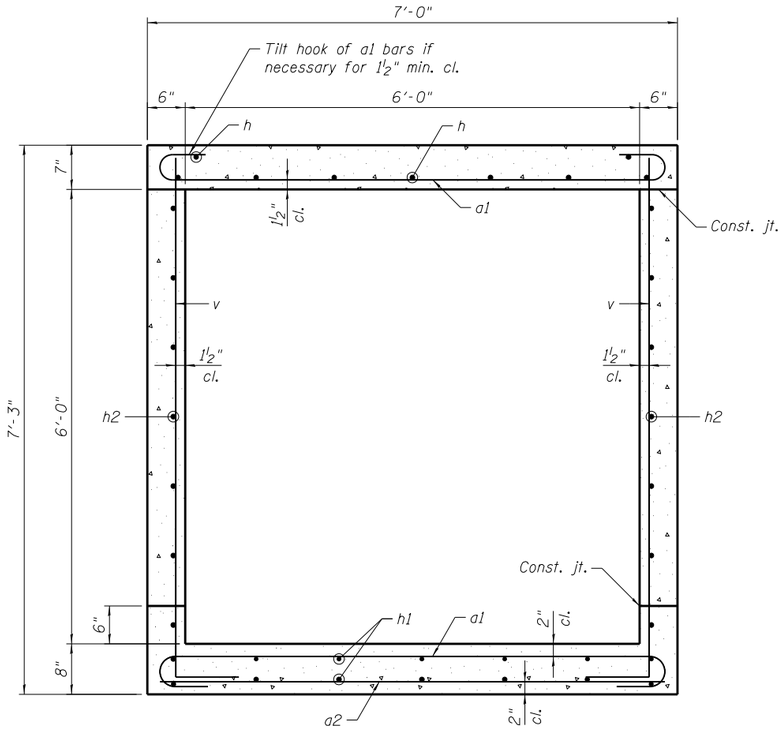

SECTION A-A

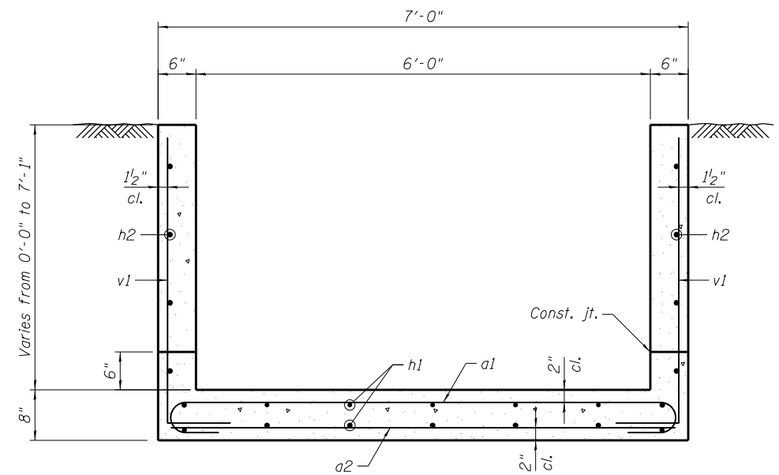

SECTION B-B

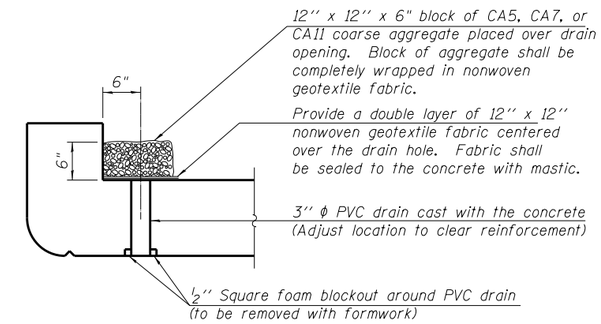

DRAIN DETAIL

(All costs associated with furnishing and constructing the above drain details will not be measured for payment but shall be included in the contract unit price for the end section.)

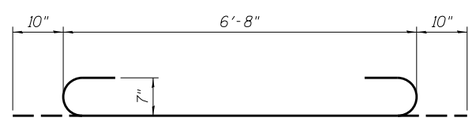

BAR a1

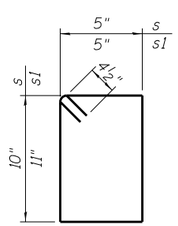

BARS s & s1

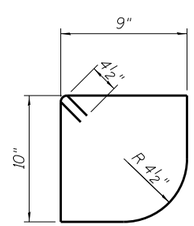

BAR s2

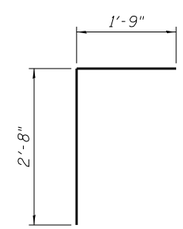

BAR d

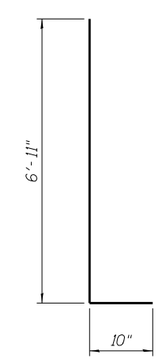

BAR v

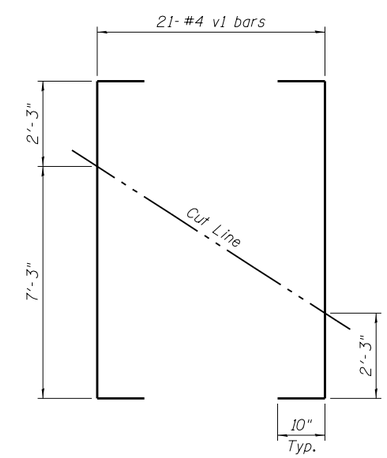

CUTTING DIAGRAM

Order bars full length. Cut as shown and use remainder of bars in opposite wall.

BILL OF MATERIAL

(For Information Only)

Bar	No.	Size	Length	Shape
a1	48	#7	8'-4"	
a2	36	#4	6'-8"	
d	8	#4	4'-5"	
h	9	#7	4'-0"	
h1	14	#4	25'-5"	
h2	14	#5	24-'0"	
h3	12	#6	6'-8"	
h4	2	#5	19'-3"	
h5	12	#5	2'-8"	
h6	10	#6	2'-3"	
s	7	#4	3'-3"	
s1	7	#4	3'-5"	
s2	8	#4	3'-9"	
v	20	#4	7'-9"	
v1	21	#4	11'-2"	

Description	Unit	Quantity
Concrete Box Culverts	Cu. Yd.	9.7
Reinforcement Bars	Pound	2,210

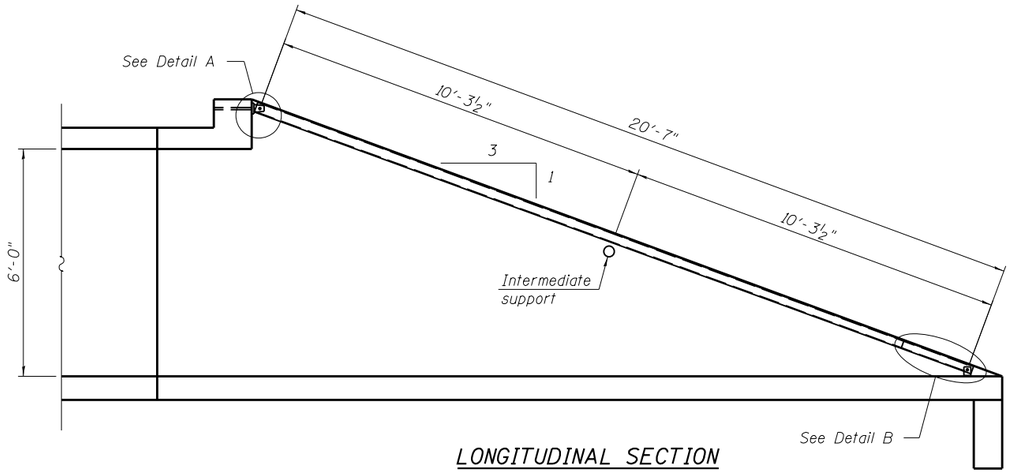

LONGITUDINAL SECTION

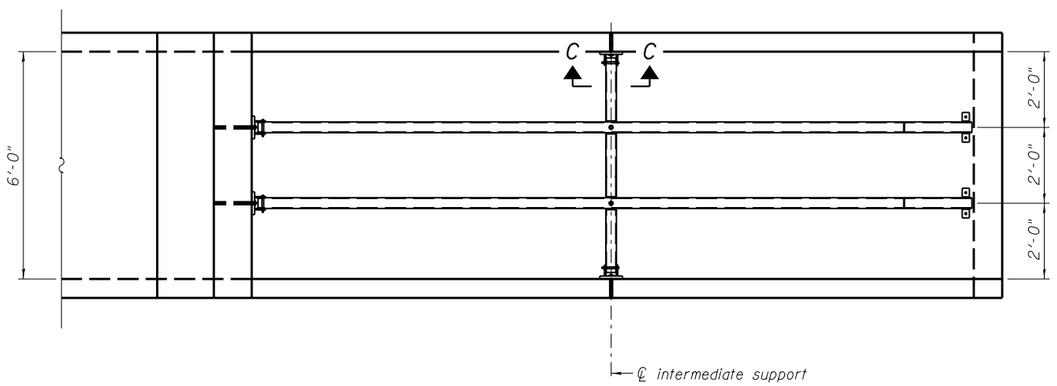

PLAN VIEW

GENERAL NOTES

Length shall be determined by the Contractor. All steel pipe shall be standard weight (Sch. 40) unless otherwise noted.

Traversable Steel Pipe System details shown for Box Culvert End Sections. Traversable Steel Pipe System details for other culvert end sections similar.

All components of the Traversable Steel Pipe System shall be galvanized according to the requirements of AASHTO M 111 or M 232 as applicable.

Fabrication of the Traversable Steel Pipe System shall conform to the requirements in Section 505 of the Standard Specifications unless noted otherwise.

Structural steel shapes and plates shall conform to the requirements of Article 1006.04 of the Standard Specifications. Steel pipes shall conform to the requirements of ASTM A 53 (Type E or S), Grade B.

Anchor rods shall conform to the requirements of ASTM F1554, Grade 105. Anchor rods shall be drilled and epoxy grouted according to the requirements of Section 584 of the Standard Specifications. The chemical adhesive system shall be capable of achieving a minimum proof load of 5000 pounds and an ultimate shear capacity of 8000 pounds per anchor.

Bolts and thru bolts shall conform to the requirements of Article 1006.08 of the Standard Specifications except threaded rods conforming to the requirements of ASTM F1554, Grade 105 may be used for the thru bolts.

The minimum edge distance from the center of a hole to the free edge of a structural shape or plate shall be 1 1/2 " unless noted otherwise.

Bolts and anchor rods shall be snug tightened by a few impacts of an impact wrench or the full force of a worker using an ordinary spud wrench unless otherwise noted.

All cost associated with fabricating, furnishing, and installing the Traversable Steel Pipe System will be paid for at the contract unit price per lineal foot for Traversable Pipe Grate.

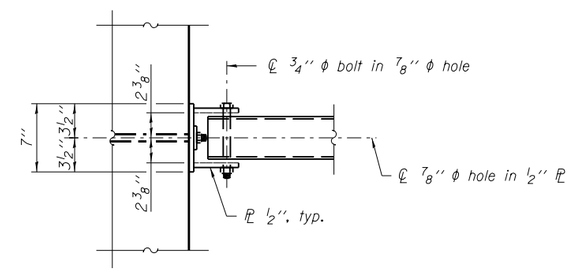

VIEW A-A

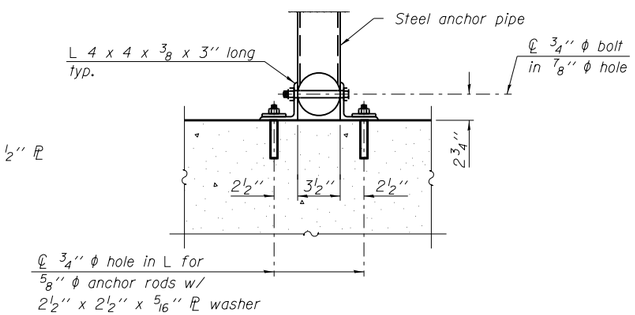

SECTION B-B

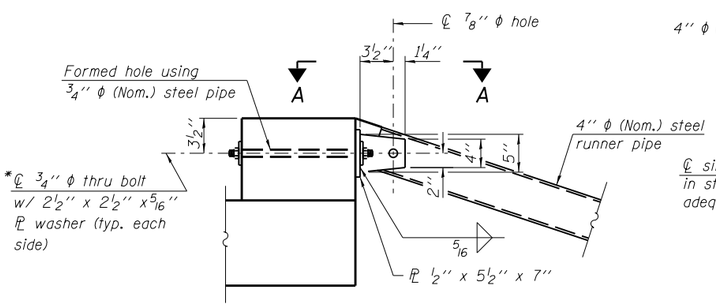

*Bolt shall be tightened per Art. 505.04(f)(2)d of the Standard Specifications

DETAIL A

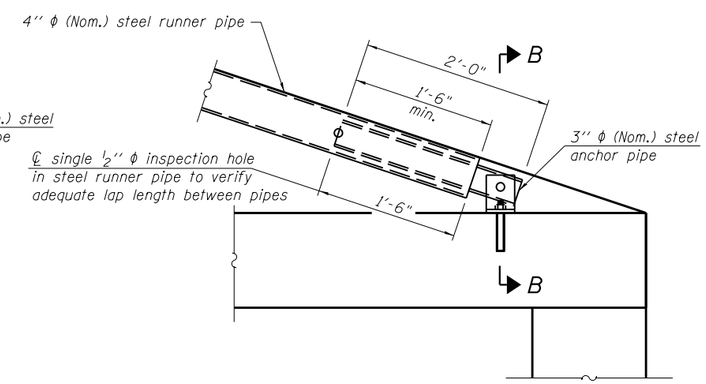

DETAIL B

*** The lap length between pipes may be adjusted in the field to accommodate construction tolerances but shall not be less than 9".

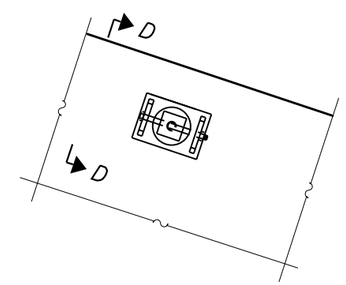

VIEW C-C

(See Detail A for dimensions and details not shown.)

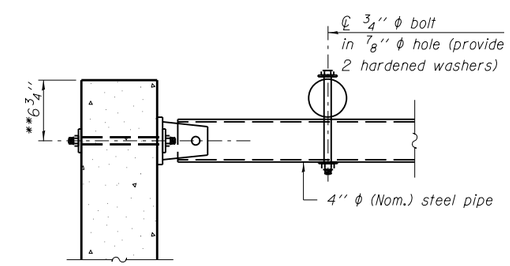

SECTION D-D

** Measured perpendicular to top of culvert wall. In addition, formed hole shall be located a minimum of 6" measured horizontally from any vertical joints necessary for construction of the culvert end section.

FILE NAME = W:\Projects\2010\100120 PTB 157-25\cadd\Structural\Dgn\WO #3 IL 92 Culverts\Station870+00.00\Final Submittal 13.0320\870+00.00-64H11-004-GratingSystemDtls.dgn

WILLS BURKE KELSEY ASSOCIATES LTD. 116 West Main Street, Suite 201 St. Charles, Illinois 60174	USER NAME = hferstl	DESIGNED - DLS	REVISED -	STATE OF ILLINOIS DEPARTMENT OF TRANSPORTATION	TRAVERSABLE STEEL PIPE SYSTEM – STA. 870+00.00 RT. STRUCTURE NO. 081-1053	F.A.P. RTE.	SECTION	COUNTY	TOTAL SHEETS	SHEET NO.
		CHECKED - AEU	REVISED -			599	(83MFT & 103MFT)W	ROCK ISLAND	340	162
	PLOT SCALE =	DRAWN - DLS	REVISED -					CONTRACT NO. 64H11		
	PLOT DATE = 3/20/2013	CHECKED - AEU	REVISED -		SHEET NO. 4 OF 6 SHEETS	FED. ROAD DIST. NO.	ILLINOIS	FED. AID PROJECT		

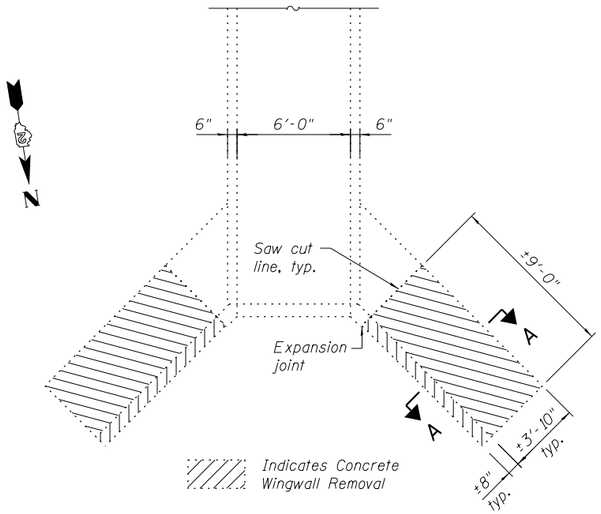

REMOVAL PLAN

Exisitng north end section of 6' x 6' reinforced concrete box culvert - Sta 870+00.00

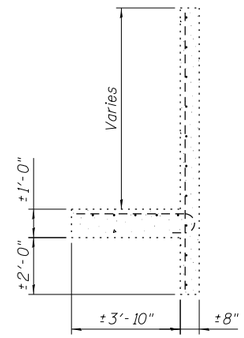

SECTION A-A

Existing reinforced concrete wingwall to be removed

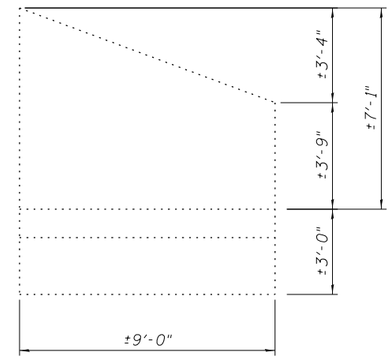

ELEVATION

Existing reinforced concrete wingwall to be removed

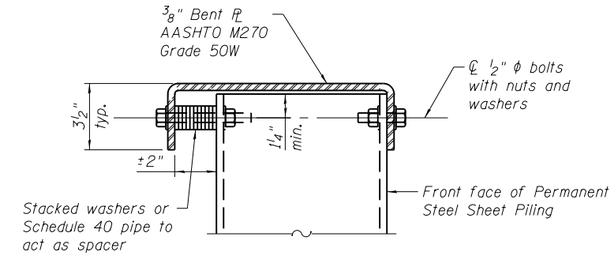

SECTION C-C

Fabricated steel cap

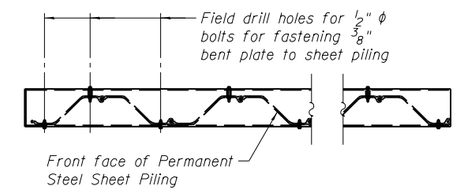

WINGWALL PLAN

Showing connection of fabricated steel cap to Permanent Steel Sheet Piling

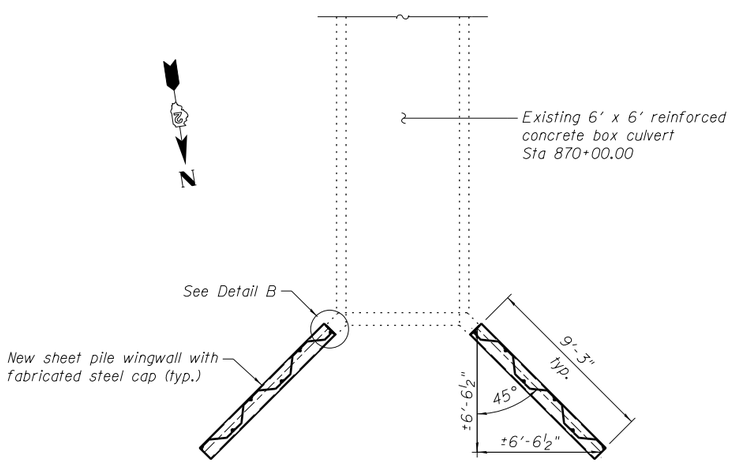

PLAN

Showing new sheet pile wingwalls

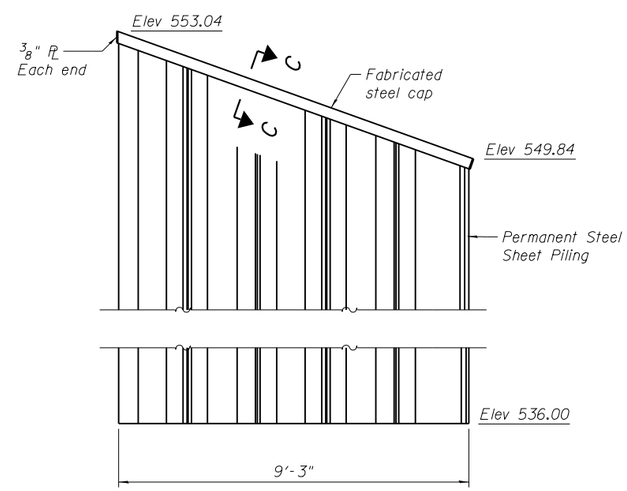

WINGWALL ELEVATION

The sheet piling for the wingwalls shall conform to the special provision Permanent Steel Sheet Piling. The minimum effective section modulus for the Permanent Steel Sheet Piling shall be 3.9 in^3/ft.

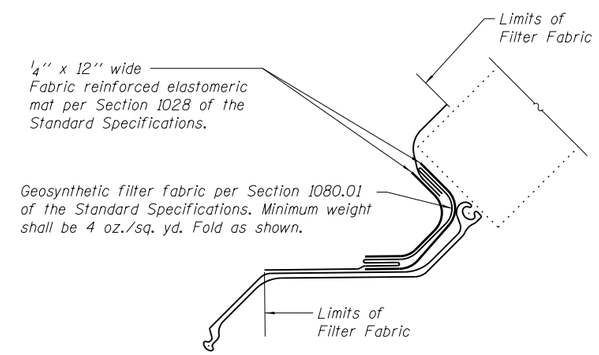

DETAIL B

Note: Fabric reinforced elastomeric mat and geosynthetic filter fabric shall not be paid for separately but shall be included in the cost of Permanent Steel Sheet Piling.

FILE NAME = W:\Projects\2010\100120 PTB 157\25\cadd\Structural\Dgn\WO #3 IL 92 Culverts\Station870+00.00\Final Submittal 13.0220\870+00.00-64H11-005-SheetPileWings.dgn

WILLS BURKE KELSEY ASSOCIATES LTD. 116 West Main Street, Suite 201 St. Charles, Illinois 60174	USER NAME = hferstl	DESIGNED - AWH	REVISED -
		CHECKED - AEU	REVISED -
	PLOT SCALE =	DRAWN - AWH	REVISED -
	PLOT DATE = 3/20/2013	CHECKED - AEU	REVISED -

STATE OF ILLINOIS
DEPARTMENT OF TRANSPORTATION

BOX CULVERT END SECTION DETAILS – STA. 870+00.00 LT.
STRUCTURE NO. 081-1053

SHEET NO. 5 OF 6 SHEETS

F.A.P. RTE.	SECTION	COUNTY	TOTAL SHEETS	SHEET NO.
599	(83MFT & 103MFT)W	ROCK ISLAND	340	163
		CONTRACT NO. 64H11		
FED. ROAD DIST. NO.	ILLINOIS	FED. AID PROJECT		

Illinois Department of Transportation
Division of Highways
Illinois Department of Transportation/D-2

SOIL BORING LOG

Page 1 of 1

Date 11/17/03

ROUTE FA 599 DESCRIPTION P92-029-79 Box culvert, IL 92 east of 154th Street LOGGED BY C. Jenkins

SECTION (83MAFT&103MFT)W&RS LOCATION Buffalo Prairie Twp. - NE, SEC. 25, TWP. 17N, RNG. 4W

COUNTY Rock Island DRILLING METHOD Hollow Stem Auger HAMMER TYPE CME-45 Automatic

STRUCT. NO.
Station 870+05

BORING NO. B-1e
Station 870+16
Offset 11.00ft Lt CL
Ground Surface Elev. 556.10 ft

Surface Water Elev. None ft
Stream Bed Elev. 89.60 ft

Groundwater Elev.:
First Encounter 541.1 ft ▼
Upon Completion 540.3 ft ∇
After ____ Hrs. ____ ft

Description	Elev.	DEPTH (ft)	BLOWS (/6")	UCS Qu (tsf)	MOIST (%)
MEDIUM brown SILTY LOAM					
				0.8 P	17.0
STIFF tan/gray SILTY LOAM	553.60		4		
			5 4	1.3 P	18.0
STIFF pink/rose SANDY LOAM TILL	552.10	-5	3		
			3 6	1.2 S	14.0
STIFF pink/rose SANDY LOAM TILL	549.60		2		
			2 4	1.1 B	17.0
VERY STIFF pink/rose CLAY	547.10	-10	3		
			3 5	2.1 S	44.0
MEDIUM gray/pink SILTY CLAY with a SAND lens	544.60		2		
			2 3	0.7 B	18.0
MEDIUM gray/pink SILTY CLAY	542.10	▼-15	1		
		∇	1 3	0.5 B	27.0
STIFF gray/red SILTY CLAY with a SAND lens	539.60		1		
			2 4	1.1 S	26.0
	536.60	-20			

Description	Elev.	DEPTH (ft)	BLOWS (/6")	UCS Qu (tsf)	MOIST (%)
VERY DENSE gray SHALE under gray GRAVEL			11		
			15 85		
	534.60		100/9" PEN		
End of Boring		-25			
		-30			
		-35			
		-40			

The Unconfined Compressive Strength (UCS) Failure Mode is indicated by (B-Bulge, S-Shear, P-Penetrometer)
The SPT (N value) is the sum of the last two blow values in each sampling zone (AASHTO T206)

BBS, from 137 (Rev. 8-99)

Illinois Department of Transportation
Division of Highways
Illinois Department of Transportation/D-2

SOIL BORING LOG

Page 1 of 1

Date 11/17/03

ROUTE FA 599 DESCRIPTION P92-029-79 Box culvert, IL 92 east of 154th Street LOGGED BY C. Jenkins

SECTION (83MAFT&103MFT)W&RS LOCATION Buffalo Prairie Twp. - NE, SEC. 25, TWP. 17N, RNG. 4W

COUNTY Rock Island DRILLING METHOD Hollow Stem Auger HAMMER TYPE CME-45 Automatic

STRUCT. NO.
Station 870+05

BORING NO. B-2e
Station 869+95
Offset 11.00ft Rt CL
Ground Surface Elev. 556.20 ft

Surface Water Elev. None ft
Stream Bed Elev. 89.60 ft

Groundwater Elev.:
First Encounter 538.7 ft ▼
Upon Completion 537.5 ft ∇
After ____ Hrs. ____ ft

Description	Elev.	DEPTH (ft)	BLOWS (/6")	UCS Qu (tsf)	MOIST (%)
GRAVEL					
STIFF brown SILTY LOAM with some GRAVEL				1.1 P	14.0
VERY STIFF tan SILTY CLAY	553.70		4		
			4 6	2.5 B	16.0
STIFF tan SILTY LOAM with a SAND lens	552.20	-5	3		
			4 6	1.1 S	19.0
MEDIUM pink/rose SANDY LOAM TILL	549.70		2		
			3 5	0.7 S	16.0
STIFF pink with some gray CLAY with a SAND lens	547.20	-10	2		
			2 4	1.2 B	44.0
MEDIUM gray SILTY LOAM	544.70		1		
			1 3	0.5 B	28.0
MEDIUM gray/pink SANDY LOAM	542.20	-15	2		
			2 3	0.5 B	23.0
VERY DENSE gray SHALE under a GRAVEL lens	539.70	▼	2		
		∇	10 100/5" PEN		
End of Boring	537.20	-20			

The Unconfined Compressive Strength (UCS) Failure Mode is indicated by (B-Bulge, S-Shear, P-Penetrometer)
The SPT (N value) is the sum of the last two blow values in each sampling zone (AASHTO T206)

BBS, from 137 (Rev. 8-99)

FILE NAME = W:\Projects\2010\100120 PTB 157\25\cadd\Structural\Dgn\WO #3 IL 92 Culverts\Station870+00.00-Final Submittal 13.0320\870+00.00-64H11-006-SoilBorings.dgn

WILLS BURKE KELSEY ASSOCIATES LTD.
116 West Main Street, Suite 201
St. Charles, Illinois 60174

USER NAME = hferstl	DESIGNED -	REVISED -
	CHECKED -	REVISED -
PLOT SCALE =	DRAWN - AWH	REVISED -
PLOT DATE = 3/20/2013	CHECKED - AEU	REVISED -

STATE OF ILLINOIS
DEPARTMENT OF TRANSPORTATION

SOIL BORING LOGS – STA. 870+00.00
STRUCTURE NO. 081-1053

SHEET NO. 6 OF 6 SHEETS

F.A.P. RTE.	SECTION	COUNTY	TOTAL SHEETS	SHEET NO.
599	(83MFT & 103MFT)W	ROCK ISLAND	340	164
		CONTRACT NO. 64H11		
FED. ROAD DIST. NO.	ILLINOIS	FED. AID PROJECT		

Existing Structure: The existing culvert, as field measured, has a 4'-8" span and 4'-0" rise. The existing culvert is approximately 93'-10" out to out headwalls and is on a 68° skew to the roadway. The upstream end of the existing culvert will be extended. One lane of traffic to be maintained at all times utilizing staged construction.

No salvage.

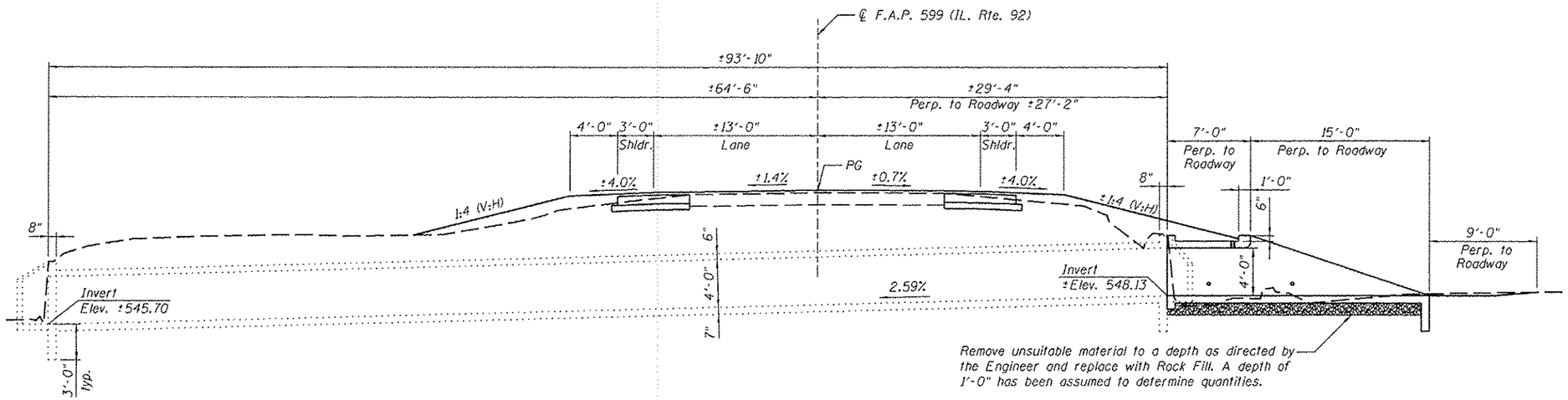

LONGITUDINAL SECTION

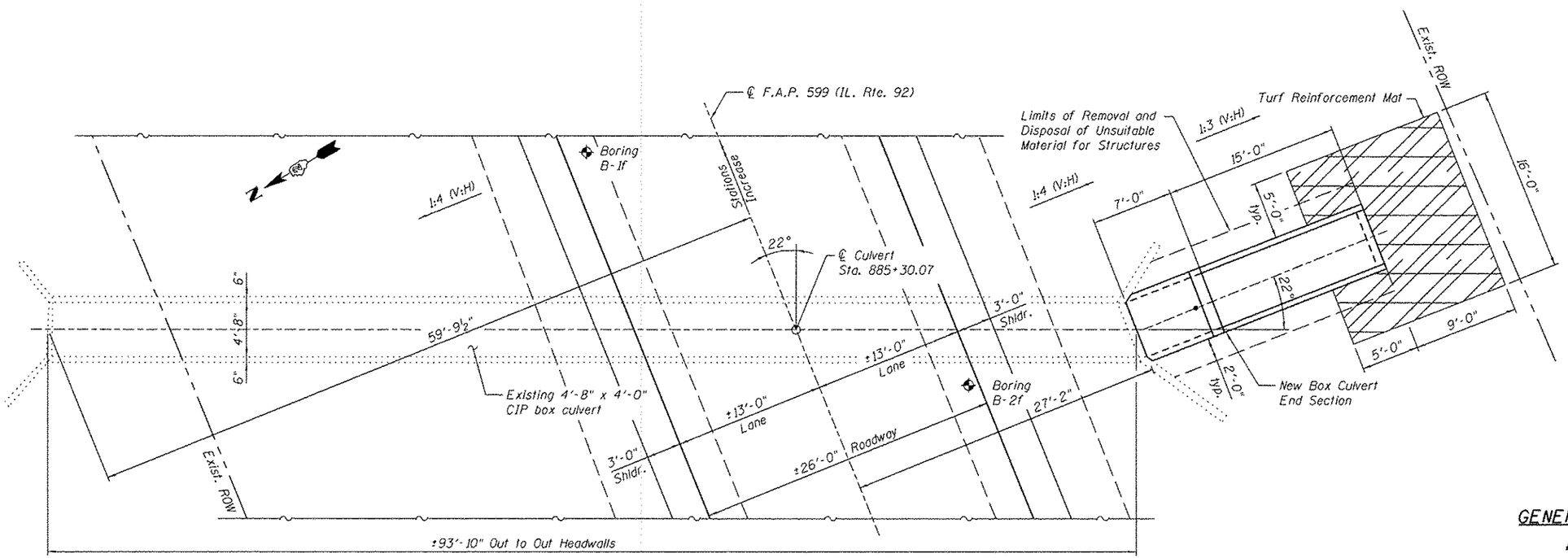

PLAN

DESIGN SPECIFICATIONS

2002 AASHTO Bridge Design Specifications

DESIGN STRESSES

FIELD UNITS

f'c = 3,500 psi
fy = 60,000 psi (Reinforcement)

INDEX OF SHEETS

1. General Plan & Elevation
2. General Notes & Bill of Material
3. Box Culvert End Section
4. Box Culvert End Section Details
5. Traversable Steel Pipe System
6. Soil Boring Logs

LICENSED STRUCTURAL ENGINEER
DAVID L. SMOOT
081-005861
ST. CHARLES
ILLINOIS
STATE OF ILLINOIS

David L. Smoot
Signature
Date: March 13, 2013
License Expires 11/30/2014

GENERAL PLAN & ELEVATION
ILLINOIS ROUTE 92
F.A.P. RTE 599 - SEC. (83MFT & 103MFT)W
ROCK ISLAND COUNTY
STATION 885+30.07

FILE NAME = W:\Projects\2818\128128 PTB 157\25\cadd\Structural\Dgn\W0 13 IL 92 Culvert\Station885+30.07\Final Submittal 13.0328\885+30.07-64H11-R21-GPE.dgn

WILLS BURKE KELSEY ASSOCIATES LTD.
116 West Main Street, Suite 201
St. Charles, Illinois 60174

USER NAME = nparris	DESIGNED - KMA	REVISED -	
	CHECKED - DLS	REVISED -	
PLOT SCALE =	DRAWN - KMA	REVISED -	
PLOT DATE = 3/21/2013	CHECKED - DLS	REVISED -	

STATE OF ILLINOIS
DEPARTMENT OF TRANSPORTATION

GENERAL PLAN & ELEVATION
STA. 885 + 30.07

SHEET NO. 1 OF 6 SHEETS

F.A.P. RTE.	SECTION	COUNTY	TOTAL SHEETS	SHEET NO.
599	(83MFT & 103MFT)W	ROCK ISLAND	340	165
		CONTRACT NO. 64H11		
FED. ROAD DIST. NO.	ILLINOIS	FED. AID PROJECT		

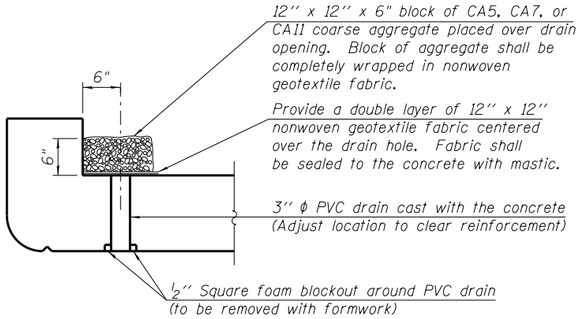

DRAIN DETAIL

(All costs associated with furnishing and constructing the above drain details will not be measured for payment but shall be included in the contract unit price for the end section.)

GENERAL NOTES

1. Plan dimensions and details have been taken from existing plans or survey/field checks. As such, these dimensions and details are subject to nominal construction variations. The Contractor shall field verify existing dimensions and details affecting new construction and make necessary approved adjustments prior to construction or ordering of materials. Such variations shall not be cause for additional compensation for a change in scope of the work, however, the Contractor will be paid for the quantity actually furnished at the unit price bid for the work.

2. The existing culvert, as field measured, has a 4'-8" span. The proposed culvert end section on the upstream end of the existing culvert will be skewed 22° to the existing culvert, perpendicular to the roadway. The new end section will have a 5'-0" span as shown on the plans. Prior to the start of work and before the ordering of material, the Contractor shall verify the upstream opening and proposed span of the new end section and advise the Engineer of any discrepancies or adjustments to the proposed geometry.

3. All exposed concrete edges shall be chamfered 3/4" unless noted otherwise. All construction joints shall be bonded.

4. This work shall conform to the requirements of the applicable portions of Sections 501, 503, 505, 508 and 584 of the Standard Specifications.

5. A precast option is not allowed at this location.

6. Drainage holes shall conform to the requirements of Article 503.11 of the Standard Specifications.

7. Nonwoven geotextile fabric shall conform to the requirements of Art. 1080.01 of the Standard Specifications. The minimum weight of the fabric shall be 6 ounces per square yard.

TOTAL BILL OF MATERIAL

ITEM	UNIT	TOTAL
Turf Reinforcement Mat	Sq. Yd.	22
Removal and Disposal of Unsuitable Material for Structures	Cu. Yd.	9
Box Culvert End Sections, Culvert No. 06	Each	1
Traversable Pipe Grate	Foot	14.0
Rock Fill	Ton	15

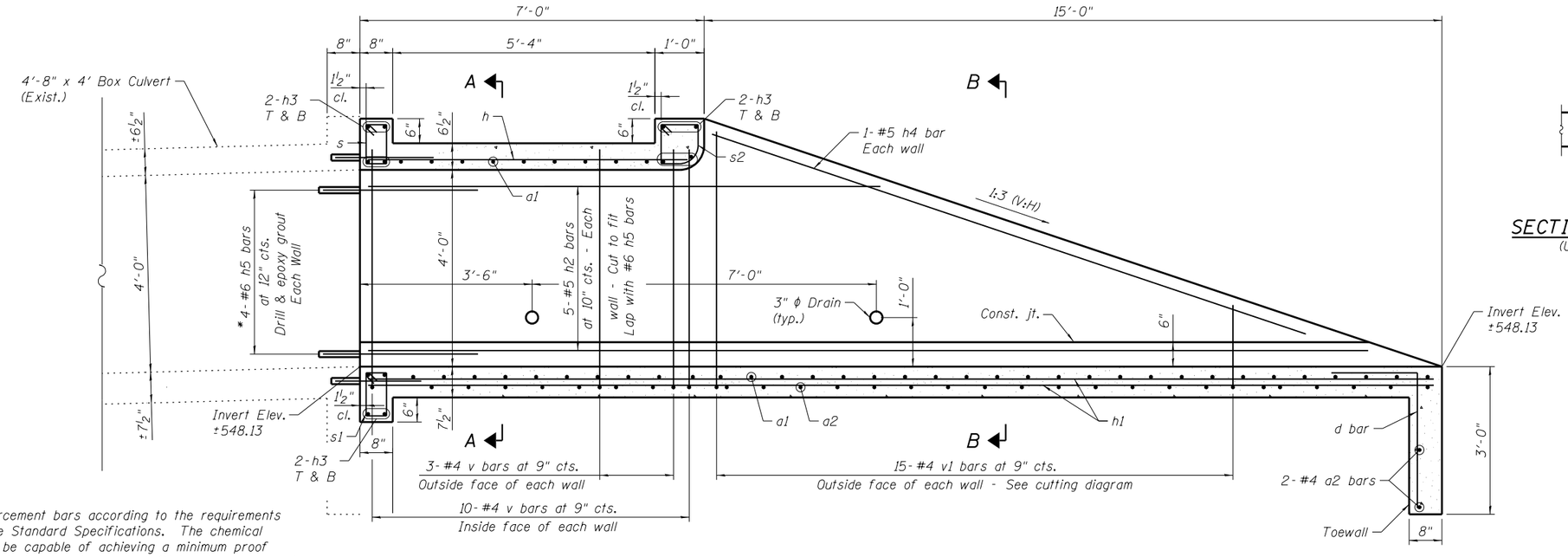

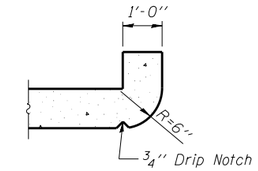

SECTION THRU HEADWALL

(Up Stream End Only)

* Epoxy grout reinforcement bars according to the requirements of Section 584 of the Standard Specifications. The chemical adhesive system shall be capable of achieving a minimum proof load of 5,000 lb. A depth of embedment of 9" has been assumed to determine bar lengths and quantities. The actual depth will be dependent on the selected chemical adhesive and approval of the Engineer. Cost included in the pay item Box Culvert End Sections, Culvert No. 06.

LONGITUDINAL SECTION

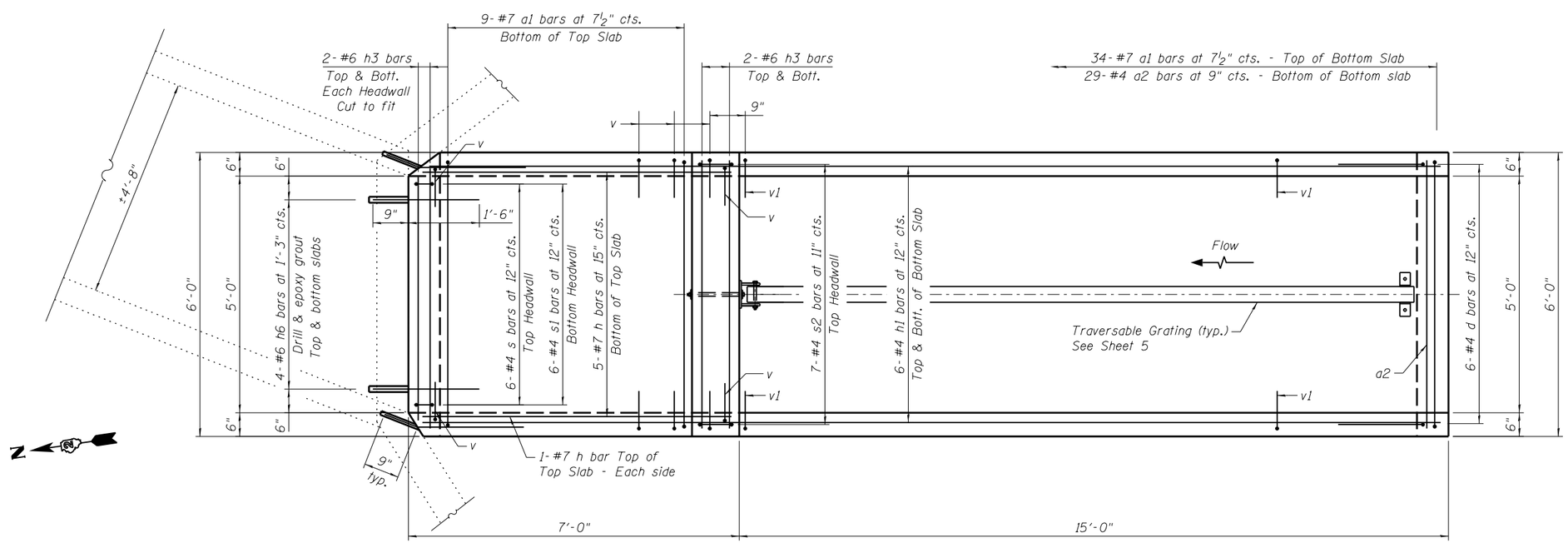

PLAN

WILLS BURKE KELSEY ASSOCIATES LTD. 116 West Main Street, Suite 201 St. Charles, Illinois 60174	USER NAME = hferstl	DESIGNED - DLS	REVISED -	STATE OF ILLINOIS DEPARTMENT OF TRANSPORTATION	BOX CULVERT END SECTION STA. 885+30.07 RT.	F.A.P. RTE. 599	SECTION (83MFT & 103MFT)W	COUNTY ROCK ISLAND	TOTAL SHEETS 340	SHEET NO. 167
		CHECKED - AEU	REVISED -							
	PLOT SCALE =	DRAWN - DLS	REVISED -					CONTRACT NO. 64H11		
	PLOT DATE = 3/20/2013	CHECKED - AEU	REVISED -		SHEET NO. 3 OF 6 SHEETS	FED. ROAD DIST. NO.	ILLINOIS	FED. AID PROJECT		

FILE NAME = W:\Projects\2010\100120 PTB 157\25\cadd\Structural\Dgn\WO #3 IL 92 Culverts\Station885+30.07\Final Submittal 13\0320\885+30.07-64H11-003-GratedEndSection.dgn

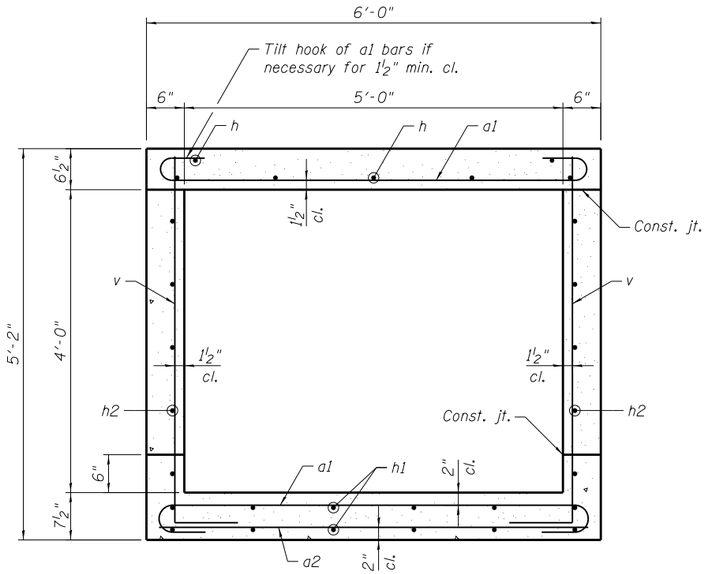

SECTION A-A

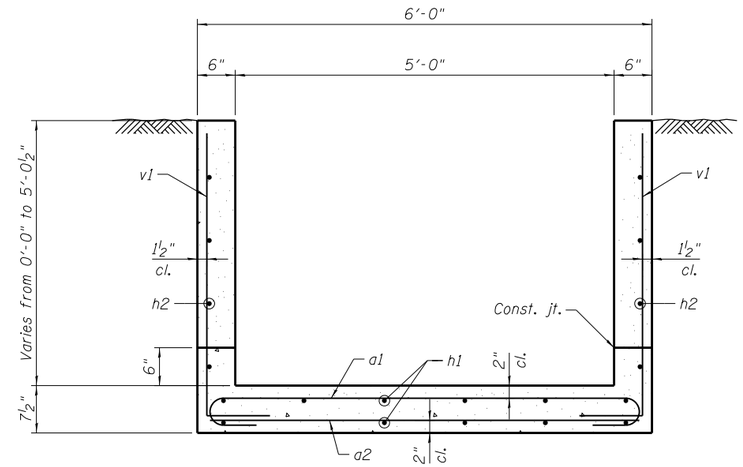

SECTION B-B

BILL OF MATERIAL

(For Information Only)

Bar	No.	Size	Length	Shape
a1	43	#7	7'-4"	
a2	31	#4	5'-8"	
d	6	#4	4'-5"	
h	7	#7	6'-6"	
h1	12	#4	21'-8"	
h2	10	#5	20'-4"	
h3	12	#6	5'-8"	
h4	2	#5	12'-9"	
h5	8	#6	3'-0"	
h6	8	#6	2'-3"	
s	6	#4	3'-2"	
s1	6	#4	3'-4"	
s2	7	#4	3'-8"	
v	26	#4	5'-8"	
v1	15	#4	8'-7"	

Description	Unit	Quantity
Concrete Box Culverts	Cu. Yd.	7.0
Reinforcement Bars	Pound	1,680

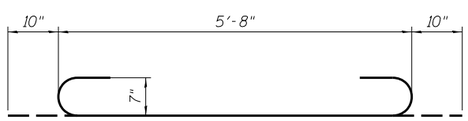

BAR a1

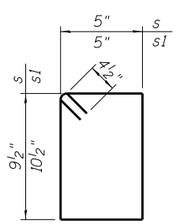

BARS s & s1

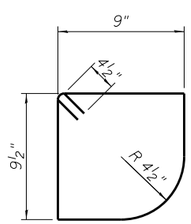

BAR s2

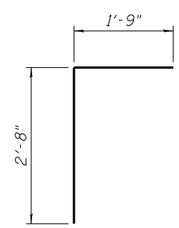

BAR d

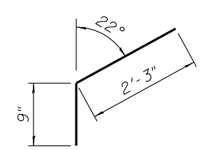

BAR h5

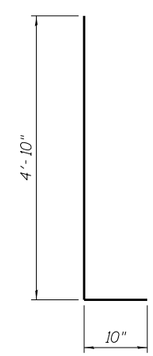

BAR v

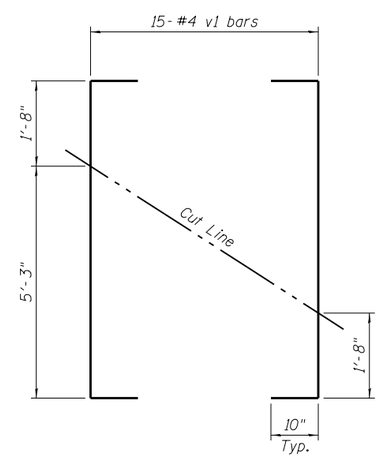

CUTTING DIAGRAM

Order bars full length. Cut as shown and use remainder of bars in opposite wall.

FILE NAME = W:\Projects\2010\120120 PTB 157\25\cadd\Structural\Dgn\WD #3 IL 92 Culverts\Station885+30.07\Final Submittal 13.0320\885-30.07-64H11-004-EndSectionDetls.dgn

WILLS BURKE KELSEY ASSOCIATES LTD.
116 West Main Street, Suite 201
St. Charles, Illinois 60174

USER NAME = hferstl	DESIGNED - DLS	REVISED -	
	CHECKED - AEU	REVISED -	
PLOT SCALE =	DRAWN - DLS	REVISED -	
PLOT DATE = 3/20/2013	CHECKED - AEU	REVISED -	

STATE OF ILLINOIS
DEPARTMENT OF TRANSPORTATION

BOX CULVERT END SECTION DETAILS
STA. 885+30.07 RT.

SHEET NO. 4 OF 6 SHEETS

F.A.P. RTE.	SECTION	COUNTY	TOTAL SHEETS	SHEET NO.
599	(83MFT & 103MFT)W	ROCK ISLAND	340	168
		CONTRACT NO. 64H11		
FED. ROAD DIST. NO.	ILLINOIS	FED. AID PROJECT		

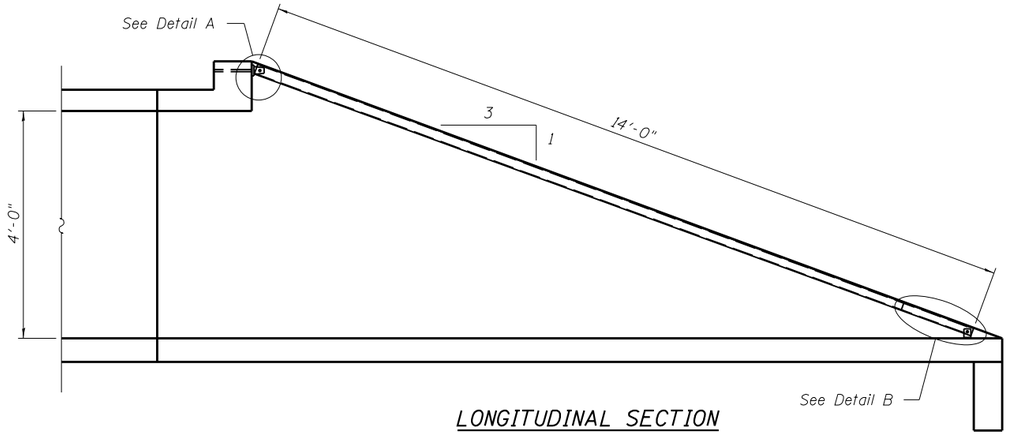

LONGITUDINAL SECTION

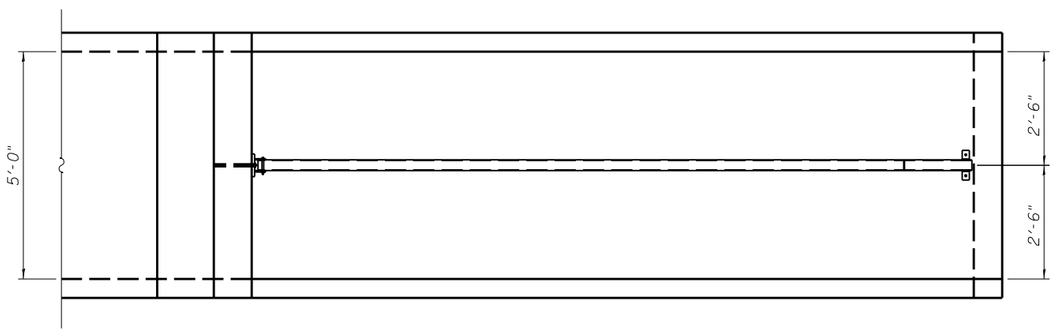

PLAN VIEW

GENERAL NOTES

Length shall be determined by the Contractor. All steel pipe shall be standard weight (Sch. 40) unless otherwise noted.

Traversable Steel Pipe System details shown for Box Culvert End Sections. Traversable Steel Pipe System details for other culvert end sections similar.

All components of the Traversable Steel Pipe System shall be galvanized according to the requirements of AASHTO M 111 or M 232 as applicable.

Fabrication of the Traversable Steel Pipe System shall conform to the requirements in Section 505 of the Standard Specifications unless noted otherwise.

Structural steel shapes and plates shall conform to the requirements of Article 1006.04 of the Standard Specifications. Steel pipes shall conform to the requirements of ASTM A 53 (Type E or S), Grade B.

Anchor rods shall conform to the requirements of ASTM F1554, Grade 105. Anchor rods shall be drilled and epoxy grouted according to the requirements of Section 584 of the Standard Specifications. The chemical adhesive system shall be capable of achieving a minimum proof load of 5000 pounds and an ultimate shear capacity of 8000 pounds per anchor.

Bolts and thru bolts shall conform to the requirements of Article 1006.08 of the Standard Specifications except threaded rods conforming to the requirements of ASTM F1554, Grade 105 may be used for the thru bolts.

The minimum edge distance from the center of a hole to the free edge of a structural shape or plate shall be 1 1/2 '' unless noted otherwise.

Bolts and anchor rods shall be snug tightened by a few impacts of an impact wrench or the full force of a worker using an ordinary spud wrench unless otherwise noted.

All cost associated with fabricating, furnishing, and installing the Traversable Steel Pipe System will be paid for at the contract unit price per lineal foot for Traversable Pipe Grate.

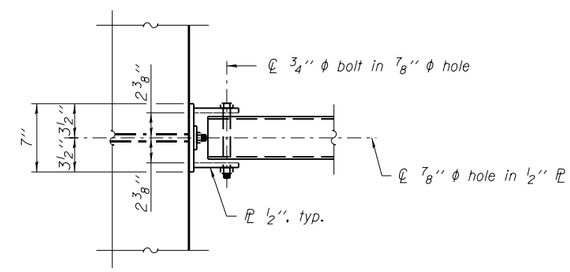

VIEW A-A

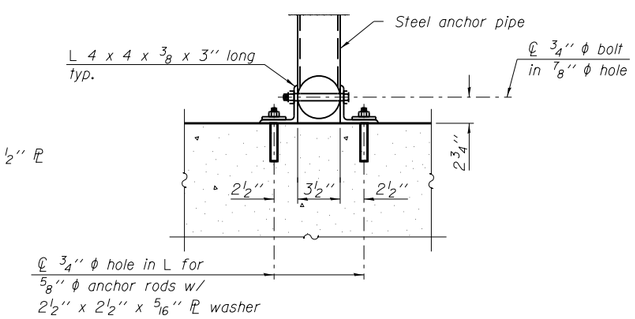

SECTION B-B

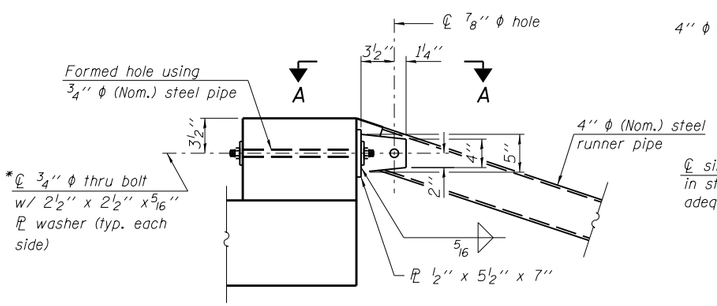

*Bolt shall be tightened per Art. 505.04(f)(2)d of the Standard Specifications

DETAIL A

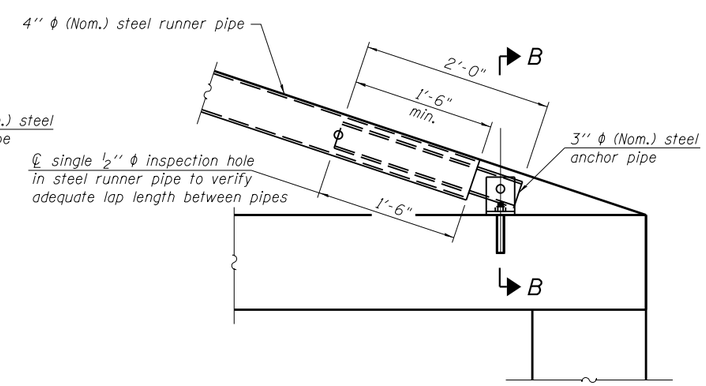

DETAIL B

*** The lap length between pipes may be adjusted in the field to accommodate construction tolerances but shall not be less than 9''.

FILE NAME = W:\Projects\2010\100120 PTB 157-25\cadd\Structural\Dgn\WO #3 IL 92 Culverts\Station885+30.07\Final Submittal 13.0320\885+30.07-64H11-005-GratingSystemDtls.dgn

WILLS BURKE KELSEY ASSOCIATES LTD. 116 West Main Street, Suite 201 St. Charles, Illinois 60174	USER NAME = hferstl	DESIGNED - DLS	REVISED -	STATE OF ILLINOIS DEPARTMENT OF TRANSPORTATION	TRAVERSABLE STEEL PIPE SYSTEM STA. 885+30.07 RT.	F.A.P. RTE.	SECTION	COUNTY	TOTAL SHEETS / SHEET NO.
		CHECKED - AEU	REVISED -			599	(83MFT & 103MFT)W	ROCK ISLAND	340 / 169
	PLOT SCALE =	DRAWN - DLS	REVISED -					CONTRACT NO. 64H11	
	PLOT DATE = 3/20/2013	CHECKED - AEU	REVISED -		SHEET NO. 5 OF 6 SHEETS	FED. ROAD DIST. NO.	ILLINOIS	FED. AID PROJECT	

Illinois Department of Transportation
Division of Highways
Illinois Department of Transportation/D-2

SOIL BORING LOG

Page 1 of 1

Date 10/28/03

ROUTE FA 599 DESCRIPTION P92-029-79 Box culvert, IL 92 LOGGED BY C. Jenkins

SECTION (83MAFT&103MFT)W&RS LOCATION Andalusia Twp. - NW, SEC. 30, TWP. 17N, RNG. 3W

COUNTY Rock Island DRILLING METHOD Hollow Stem Auger HAMMER TYPE CME-45 Automatic

STRUCT. NO.
Station 885+35

BORING NO. B-1f
Station 885+51
Offset 11.00ft Lt CL
Ground Surface Elev. 556.50 ft

Surface Water Elev. ft
Stream Bed Elev. 88.40 ft

Groundwater Elev.:
First Encounter 537.5 ft
Upon Completion 542.5 ft
After Hrs. ft

Description	Elev.	DEPTH (ft)	BLOWS (/6")	UCS Qu (tsf)	MOIST (%)
GRAVEL					
STIFF brown SANDY LOAM				1.1 P	10.0
	554.50				
MEDIUM gray SANDY LOAM			3		
			3 4	0.6 S	13.0
	553.00				
STIFF gray SILTY LOAM with ORGANICS		-5	2		
			4 4	1.3 S	17.0
	550.50				
MEDIUM gray SILTY LOAM with ORGANICS			2		
			1 2	0.7 B	32.0
	548.00				
MEDIUM gray SILTY LOAM with GRAVEL		-10	1		
			2 5	0.7 B	18.0
	545.50				
STIFF red/pink CLAY 12% ORGANICS			2		
			4 5	1.3 S	45.0
	543.00				
MEDIUM gray SILTY CLAY		-15	2		
			4 4	0.7 B	28.0
	540.50				
MEDIUM gray SILTY LOAM with ORGANICS			0		
			1 2	0.6 B	57.0
	538.00				
		-20	16		

Description	Elev.	DEPTH (ft)	BLOWS (/6")	UCS Qu (tsf)	MOIST (%)
VERY DENSE tan to gray weathered LIMESTONE under tan SAND *(continued)*			21		
			79		
	535.00		100/9"		
End of Boring			PEN		
		-25			
		-30			
		-35			
		-40			

The Unconfined Compressive Strength (UCS) Failure Mode is indicated by (B-Bulge, S-Shear, P-Penetrometer)
The SPT (N value) is the sum of the last two blow values in each sampling zone (AASHTO T206)

BBS, from 137 (Rev. 8-99)

Illinois Department of Transportation
Division of Highways
Illinois Department of Transportation/D-2

SOIL BORING LOG

Page 1 of 1

Date 10/28/03

ROUTE FA 599 DESCRIPTION P92-029-79 Box culvert, IL 92 LOGGED BY C. Jenkins

SECTION (83MAFT&103MFT)W&RS LOCATION Andalusia Twp. - NW, SEC. 30, TWP. 17N, RNG. 3W

COUNTY Rock Island DRILLING METHOD Hollow Stem Auger HAMMER TYPE CME-45 Automatic

STRUCT. NO.
Station 885+35

BORING NO. B-2f
Station 885+20
Offset 12.00ft Rt CL
Ground Surface Elev. 556.50 ft

Surface Water Elev. ft
Stream Bed Elev. 88.40 ft

Groundwater Elev.:
First Encounter 539.0 ft
Upon Completion 544.5 ft
After Hrs. ft

Description	Elev.	DEPTH (ft)	BLOWS (/6")	UCS Qu (tsf)	MOIST (%)
GRAVEL					
MEDIUM brown SANDY LOAM				0.5 P	11.0
	554.00				
VERY STIFF gray SILTY CLAY			3		
			4 5	2.1 B	18.0
	552.00				
LOOSE tan fine SAND		-5	5		
			4 3		
	549.50				
STIFF brown SANDY LOAM			1		
			1 5	1.6 S	14.0
	547.50				
VERY STIFF red/brown with blue CLAY		-10	3		
			4 5	2.3 S	25.0
	545.00				
STIFF gray/brown SILTY CLAY			2		
			2 4	1.6 S	25.0
	542.50				
STIFF gray SILTY CLAY		-15	2		
			2 4	1.5 B	30.0
	539.50				
MEDIUM gray/black weathered LIMESTONE			16		
			11 18		
	537.50				
		-20			

Description	Elev.	DEPTH (ft)	BLOWS (/6")	UCS Qu (tsf)	MOIST (%)
VERY DENSE gray weathered LIMESTONE			20		
	535.50		80		
End of Boring			100/8"		
			PEN		
		-25			
		-30			
		-35			
		-40			

The Unconfined Compressive Strength (UCS) Failure Mode is indicated by (B-Bulge, S-Shear, P-Penetrometer)
The SPT (N value) is the sum of the last two blow values in each sampling zone (AASHTO T206)

BBS, from 137 (Rev. 8-99)

FILE NAME = W:\Projects\2010\100120 PTB 157\25\cadd\Structural\Dgn\WO #3 IL 92 Culverts\Station885+30.07\Final Submittal 13.0320\885+30.07-64H11-006-SoilBorings.dgn

WILLS BURKE KELSEY ASSOCIATES LTD.
116 West Main Street, Suite 201
St. Charles, Illinois 60174

USER NAME = hferstl	DESIGNED -	REVISED -
	CHECKED -	REVISED -
PLOT SCALE =	DRAWN - AWH	REVISED -
PLOT DATE = 3/20/2013	CHECKED - DLS	REVISED -

STATE OF ILLINOIS
DEPARTMENT OF TRANSPORTATION

SOIL BORING LOGS
STA. 885+30.07 RT.

SHEET NO. 6 OF 6 SHEETS

F.A.P. RTE.	SECTION	COUNTY	TOTAL SHEETS	SHEET NO.
599	(83MFT & 103MFT)W	ROCK ISLAND	340	170
		CONTRACT NO. 64H11		
FED. ROAD DIST. NO.	ILLINOIS	FED. AID PROJECT		

Existing Structure:
Single 7'x 7' box culvert built in 1947 under Section 83.
The existing box will be extended to the south and a grated end section constructed. The existing wingwalls at the north end will be removed and replaced with steel sheet piling. One lane of traffic to be maintained at all times utilizing staged construction.

No salvage.

INDEX OF SHEETS

1. General Plan & Elevation
2. Box Culvert End Section
3. Box Culvert End Section Details
4. Traversable Steel Pipe System
5. Culvert Wingwall Repair Details

GENERAL NOTES

1. Plan dimensions and details relative to existing plans are subject to nominal construction variations. The Contractor shall field verify existing dimensions and details affecting new construction and make necessary approved adjustments prior to construction or ordering of materials. Such variatioins shall not be cause for additional compensatiion for a change in scoope of the work, however, the Contractor will be paid for the quantity actually furnished at the unit price bid for the work.
2. Removal of the existing wingwalls shall conform to Section 501 of the Standard Specifications.
3. All exposed concrete edges shall be chamfered $^3/_4$" unless otherwise noted.
4. All construction joints shall be bonded.

DESIGN SPECIFICATIONS

2002 AASHTO Standard Specifications

DESIGN STRESSES

FIELD UNITS

f'c = 3,500 psi
fy = 60,000 psi (Reinforcement)

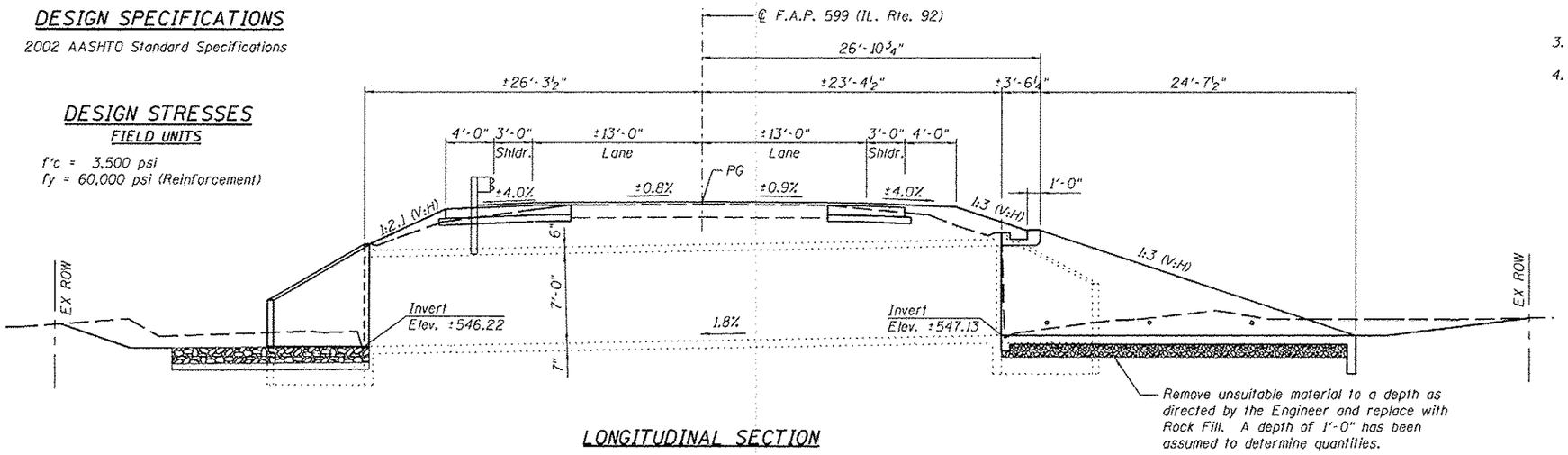

LONGITUDINAL SECTION

TOTAL BILL OF MATERIAL

ITEM	UNIT	TOTAL
Turf Reinforcement Mat	Sq. Yd.	23
Stone Riprap, Class A4	Sq. Yd.	43
Filter Fabric	Sq. Yd.	43
Removal and Disposal of Unsuitable Material for Structures	Cu. Yd.	13
Concrete Structures	Cu. Yd.	3.1
Reinforcement Bars	Pound	480
Box Culvert End Sections, Culvert No. 07	Each	1
Traversable Pipe Grate	Foot	93.5
Concrete Wingwall Removal	Each	3
Rock Fill	Ton	24

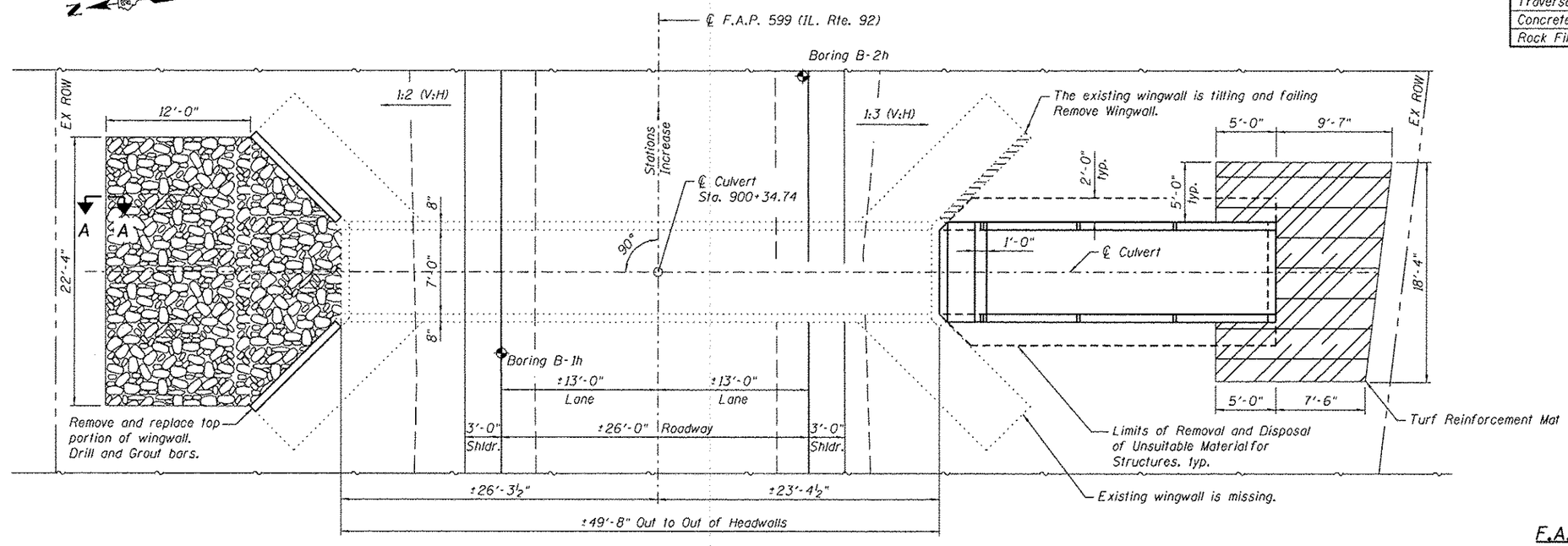

PLAN

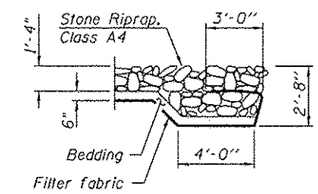

SECTION A-A

STATE OF ILLINOIS
ANDREW E. UNDERWAGER
081-006218
CHICAGO, IL
LICENSED STRUCTURAL ENGINEER

Signature: Andrew E. Underwager
Date 3-13-2013
License Expires: 11-30-2014

GENERAL PLAN & ELEVATION
ILLINOIS ROUTE 92
F.A.P. RTE 599 - SEC. (83MFT & 103MFT)W
ROCK ISLAND COUNTY
STATION 900+34.74

WILLS BURKE KELSEY ASSOCIATES LTD.
116 West Main Street, Suite 201
St. Charles, Illinois 60174

USER NAME = hfarstl	DESIGNED - AH	REVISED -	
	CHECKED - AEU	REVISED -	
PLOT SCALE =	DRAWN - AH	REVISED -	
PLOT DATE = 3/20/2013	CHECKED - AEU	REVISED -	

STATE OF ILLINOIS
DEPARTMENT OF TRANSPORTATION

GENERAL PLAN & ELEVATION
STA. 900+34.74
SHEET NO. 1 OF 5 SHEETS

F.A.P. RTE.	SECTION	COUNTY	TOTAL SHEETS	SHEET NO.
599	(83MFT & 103MFT)W	ROCK ISLAND	340	171
		CONTRACT NO. 64H11		
FED. ROAD DIST. NO.	ILLINOIS	FED. AID PROJECT		

FILE NAME = W:\Projects\2010\10210 PTB 157\25\cadd\Structural\Dgn\K0 *3 IL 92 Culvert\Station900+34.74\Final Submittal 13\8328\1908-34.74-64H11-001-CPE.dgn

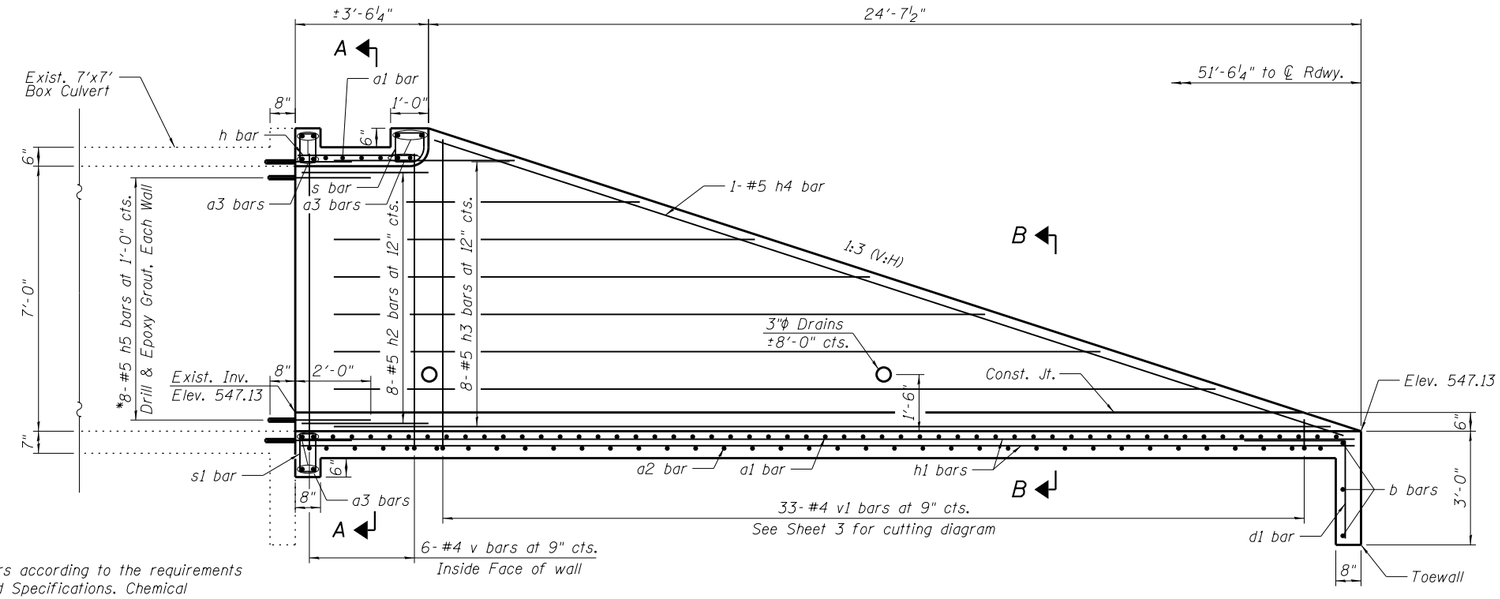

*Epoxy grout reinforcement bars according to the requirements of Section 584 of the Standard Specifications. Chemical adhesive system shall be capable of achieving a minimum proof load of 5,000 lb. Cost included in the pay item Box Culvert End Sections, Culvert No. 07.

LONG. SECTION

Order v1 and h3 bars full length. Cut to fit as shown and use remainder of bars in opposite wall.

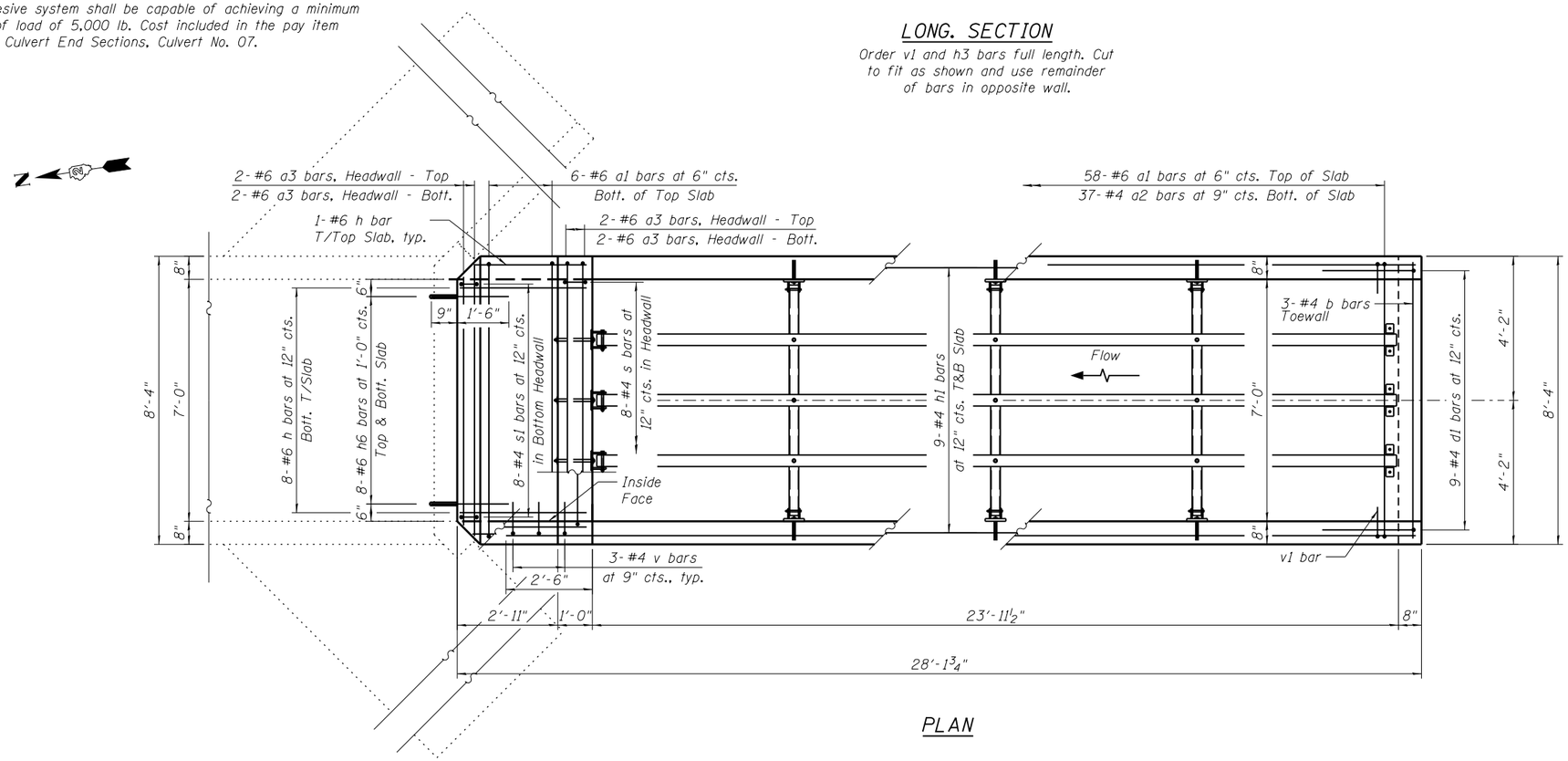

PLAN

WILLS BURKE KELSEY ASSOCIATES LTD. 116 West Main Street, Suite 201 St. Charles, Illinois 60174	USER NAME = hferstl	DESIGNED -	REVISED -	STATE OF ILLINOIS DEPARTMENT OF TRANSPORTATION	BOX CULVERT END SECTION STA. 900+34.74 RT.	F.A.P. RTE.	SECTION	COUNTY	TOTAL SHEETS	SHEET NO.
		CHECKED -	REVISED -			599	(83MFT & 103MFT)W	ROCK ISLAND	340	172
	PLOT SCALE =	DRAWN -	REVISED -					CONTRACT NO. 64H11		
	PLOT DATE = 3/20/2013	CHECKED -	REVISED -		SHEET NO. 2 OF 5 SHEETS	FED. ROAD DIST. NO.	ILLINOIS	FED. AID PROJECT		

FILE NAME = W:\Projects\2010\100120 PTB 157\25\cadd\Structural\Dgn\WO #3 IL 92 Culverts\Station900-34.74\Final Submittal 13\0320\900+34.74H11-002-Culvert Ext.dgn

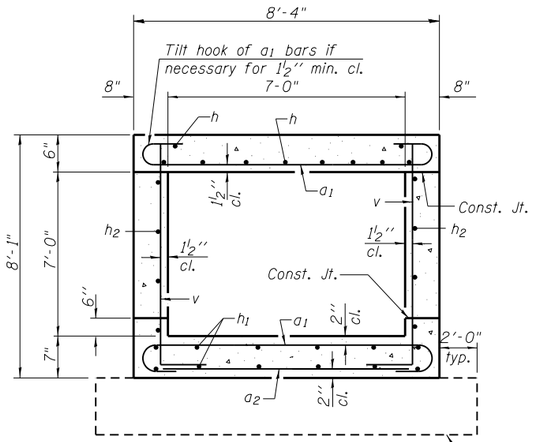

SECTION A-A

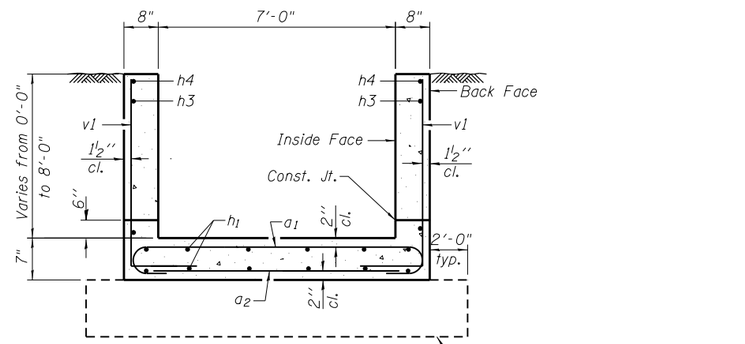

SECTION B-B

BILL OF MATERIAL
(For Information Only)

Bar	No.	Size	Length	Shape
a_1	64	#6	9'-4"	
a_2	37	#4	8'-0"	
a_3	8	#6	8'-0"	
b	3	#4	8-0'	
d_1	9	#4	5'-4"	
h	10	#6	3'-3"	
h_1	18	#4	27'-10"	
h_2	16	#5	3'-4"	
h_3	8	#5	28'-6"	
h_4	2	#5	25'-3"	
h_5	16	#5	2'-8"	
h_6	16	#6	2'-3"	
s	8	#4	3'-9"	
s_1	16	#4	3'-1"	
v	18	#4	8-7"	
v_1	33	#4	11'-7"	
DESCRIPTION			UNIT	QTY.
Concrete Box Culverts			Cu. Yd.	12.5
Reinforcement Bars			Pound	2,480

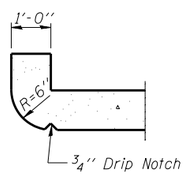

SECTION THRU HEADWALL

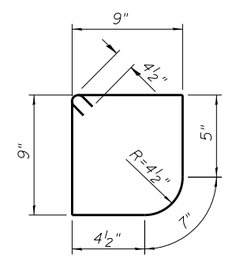

BAR s

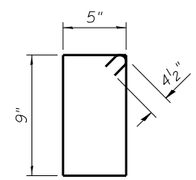

BAR s_1

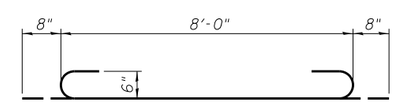

BAR a_1

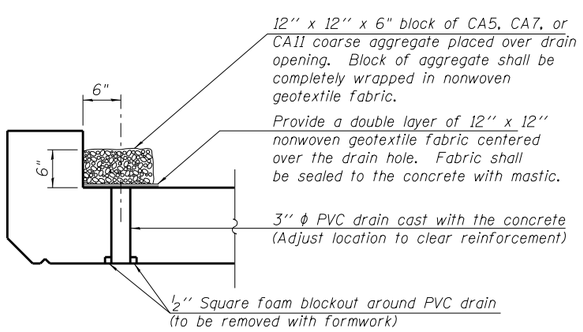

DRAIN DETAIL

(All costs associated with furnishing and constructing the above drain details will not be measured for payment but shall be included in the contract unit price for the end section.)

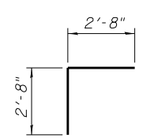

BAR d_1

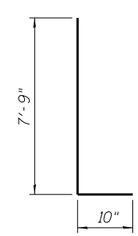

BAR v

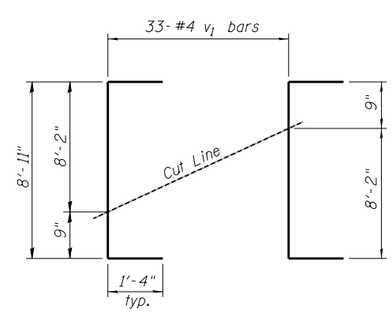

BAR v_1

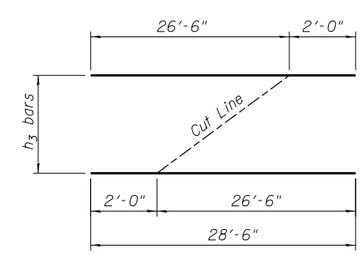

BAR h_3

FILE NAME = W:\Projects\2010\100020 PTB 157\25\cadd\Structural\Dgn\WO #3 IL 92 Culverts\Station900+34.74\Final Submittal 13.0220\900-34.74-64H11-003-Culv.Extension Details.dgn

WILLS BURKE KELSEY ASSOCIATES LTD. 116 West Main Street, Suite 201 St. Charles, Illinois 60174	USER NAME = hferstl	DESIGNED - AEU	REVISED -	STATE OF ILLINOIS DEPARTMENT OF TRANSPORTATION
		CHECKED - DLS	REVISED -	
	PLOT SCALE =	DRAWN - AH	REVISED -	
	PLOT DATE = 3/20/2013	CHECKED - AEU	REVISED -	

BOX CULVERT END SECTION DETAILS
STA. 900 + 34.74 RT.

SHEET NO. 3 OF 5 SHEETS

F.A.P. RTE.	SECTION	COUNTY	TOTAL SHEETS	SHEET NO.
599	(83MFT & 103MFT)W	ROCK ISLAND	340	173
		CONTRACT NO. 64H11		
FED. ROAD DIST. NO.	ILLINOIS	FED. AID PROJECT		

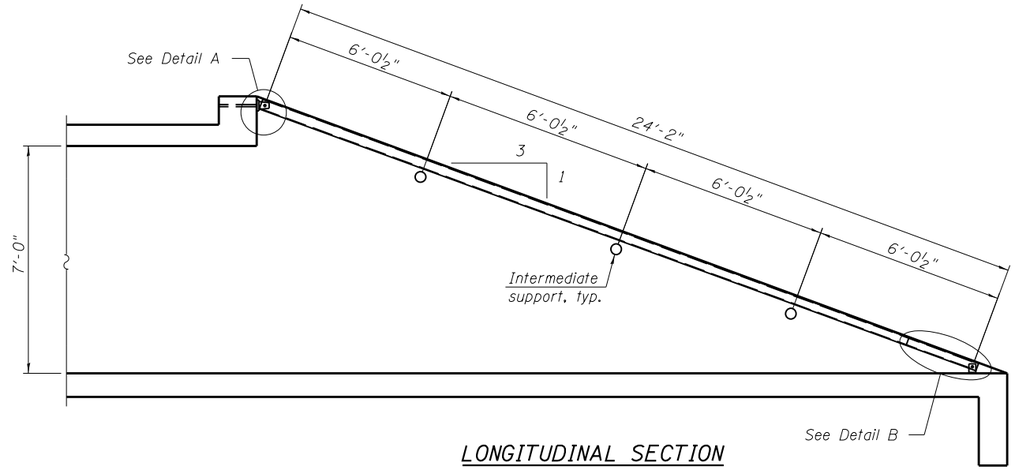

LONGITUDINAL SECTION

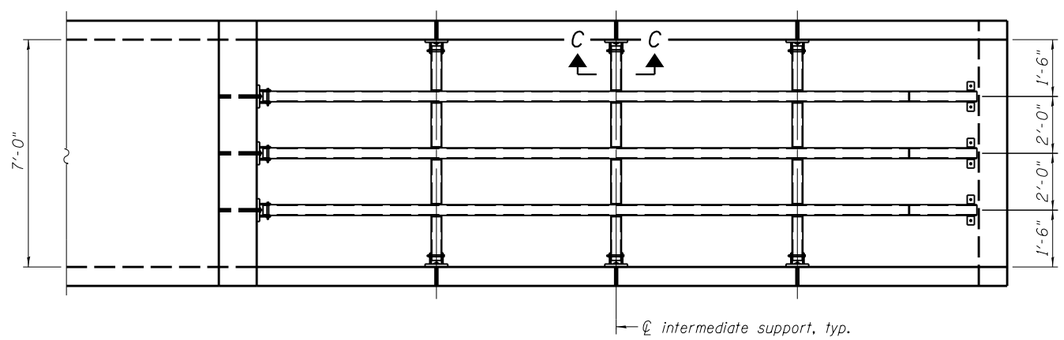

PLAN

GENERAL NOTES

Length shall be determined by the Contractor. All steel pipe shall be standard weight (Sch. 40) unless otherwise noted.

Traversable Steel Pipe System details shown for Box Culvert End Sections. Traversable Steel Pipe System details for other culvert end sections similar.

All components of the Traversable Steel Pipe System shall be galvanized according to the requirements of AASHTO M 111 or M 232 as applicable.

Fabrication of the Traversable Steel Pipe System shall conform to the requirements in Section 505 of the Standard Specifications unless noted otherwise.

Structural steel shapes and plates shall conform to the requirements of Article 1006.04 of the Standard Specifications. Steel pipes shall conform to the requirements of ASTM A 53 (Type E or S), Grade B.

Anchor rods shall conform to the requirements of ASTM F1554, Grade 105. Anchor rods shall be drilled and epoxy grouted according to the requirements of Section 584 of the Standard Specifications. The chemical adhesive system shall be capable of achieving a minimum proof load of 5000 pounds and an ultimate shear capacity of 8000 pounds per anchor.

Bolts and thru bolts shall conform to the requirements of Article 1006.08 of the Standard Specifications except threaded rods conforming to the requirements of ASTM F1554, Grade 105 may be used for the thru bolts.

The minimum edge distance from the center of a hole to the free edge of a structural shape or plate shall be 1 1/2 " unless noted otherwise.

Bolts and anchor rods shall be snug tightened by a few impacts of an impact wrench or the full force of a worker using an ordinary spud wrench unless otherwise noted.

All cost associated with fabricating, furnishing, and installing the Traversable Steel Pipe System will be paid for at the contract unit price per lineal foot for Traversable Pipe Grate.

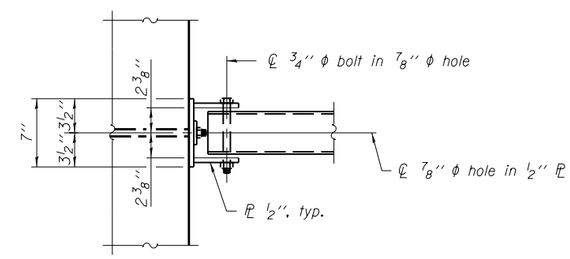

VIEW A-A

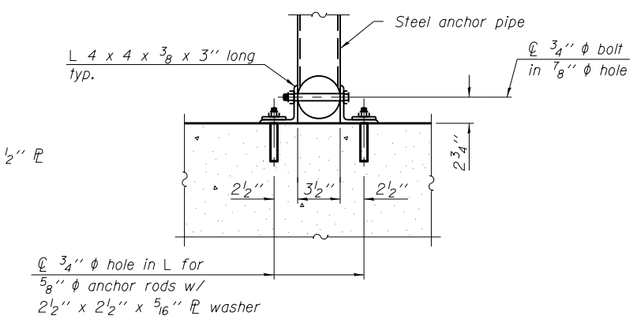

SECTION B-B

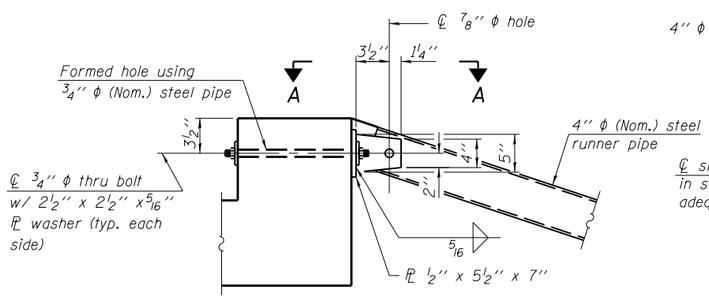

DETAIL A

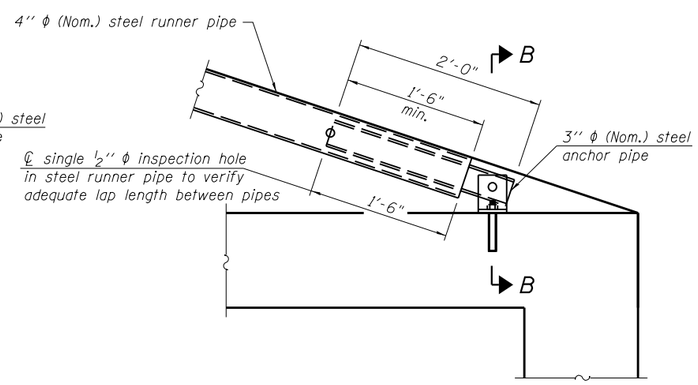

DETAIL B

*** The lap length between pipes may be adjusted in the field to accommodate construction tolerances but shall not be less than 9".

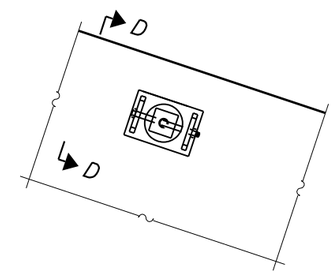

VIEW C-C

(See Detail A for dimensions and details not shown.)

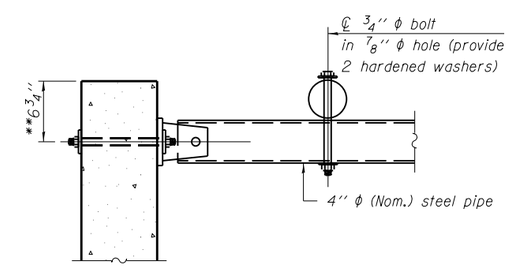

SECTION D-D

** Measured perpendicular to top of culvert wall. In addition, formed hole shall be located a minimum of 6" measured horizontally from any vertical joints necessary for construction of the culvert end section.

12-14-11

FILE NAME = W:\Projects\2010\100120 PTB 157\25\cadd\Structural\Dgn\WO #3 IL 92 Culverts\Station900+34.74\Final Submittal 13.0220\900+34.74-64H11-004-Traversable Steel Pipe System.dgn

WILLS BURKE KELSEY ASSOCIATES LTD. 116 West Main Street, Suite 201 St. Charles, Illinois 60174	USER NAME = hferstl	DESIGNED -	REVISED -
		CHECKED -	REVISED -
	PLOT SCALE =	DRAWN -	REVISED -
	PLOT DATE = 3/20/2013	CHECKED -	REVISED -

STATE OF ILLINOIS
DEPARTMENT OF TRANSPORTATION

TRAVERSABLE STEEL PIPE SYSTEM
STA. 900+34.74 RT.

SHEET NO. 4 OF 5 SHEETS

F.A.P. RTE.	SECTION	COUNTY	TOTAL SHEETS	SHEET NO.
599	(83MFT & 103MFT)W	ROCK ISLAND	340	174
		CONTRACT NO. 64H11		
FED. ROAD DIST. NO.	ILLINOIS	FED. AID PROJECT		

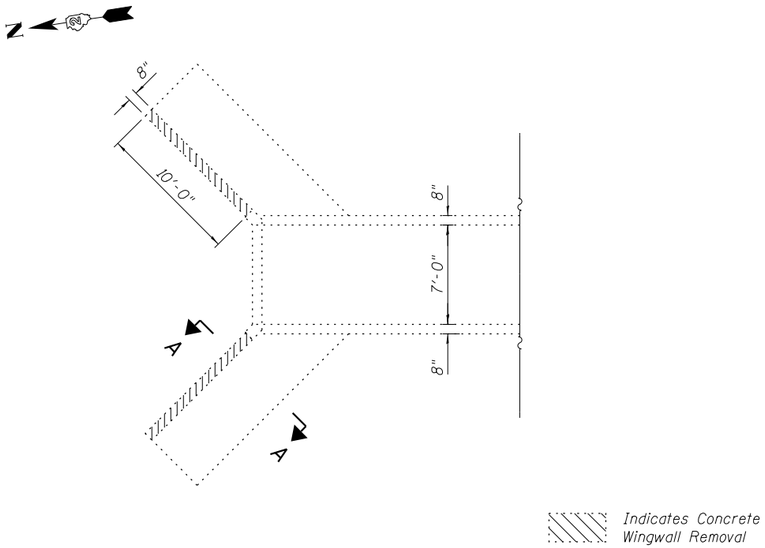

REMOVAL PLAN

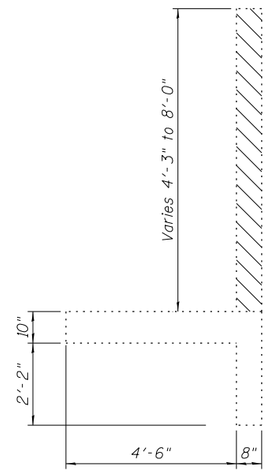

SECTION A-A

Top portion of existing reinforced concrete wingwall to be removed

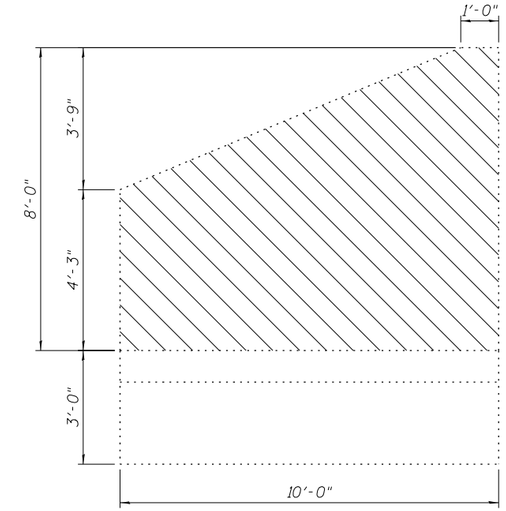

ELEVATION

Top portion of existing reinforced concrete wingwall to be removed

BILL OF MATERIAL

Bar	No.	Size	Length	Shape
h_7	8	#5	9'-8"	——
h_8	5	#5	11'-1"	——
h_9	2	#5	9'-9"	——
h_{10}	38	#6	2'-8"	——
v_2	10	#6	11'-7"	——

DESCRIPTION	UNIT	QTY.
Concrete Structures	Cu. Yd.	3.1
Reinforcement Bars	Pound	480

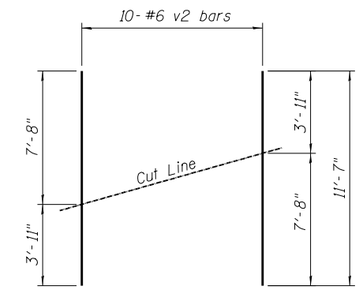

BAR v2

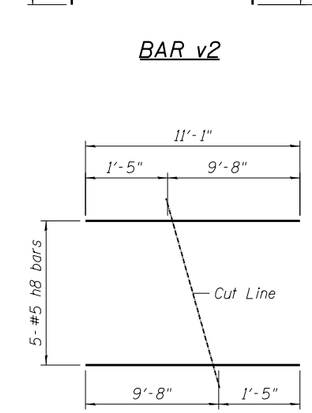

BAR h8

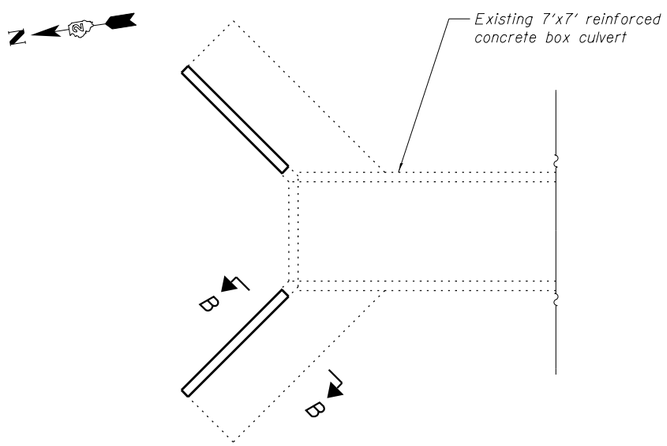

PLAN

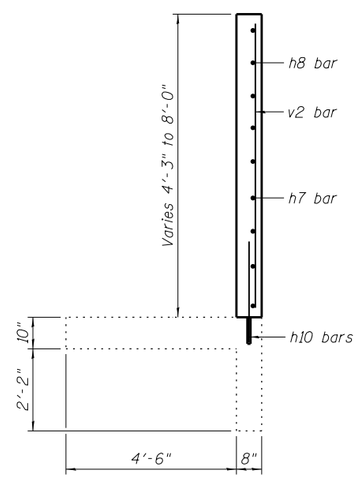

SECTION B-B

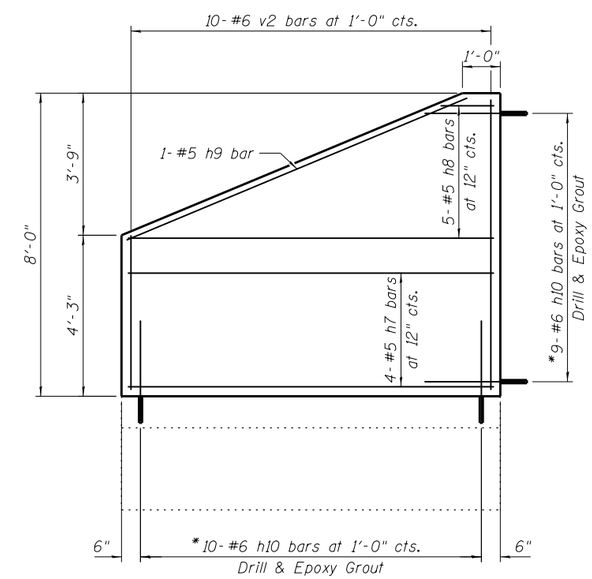

WINGWALL ELEVATION

Order v2 and h8 bars full length. Cut to fit as shown and use remainder of bars in opposite wingwall.

*Epoxy grout reinforcement bars according to the requirements of Section 584 of the Standard Specifications. Chemical adhesive system shall be capable of achieving a minimum proof load of 5,000 lb. Cost included in the pay item Concrete Structures.

FILE NAME = W:\Projects\2010\100120 PTB 157\25\cadd\Structural\Dgn\WD #3 IL 92 Culverts\Status\900+34.74\Final Submittal 13\8320\900+34.74-64H11-005-Wingwall Repair Details.dgn

WILLS BURKE KELSEY ASSOCIATES LTD.
116 West Main Street, Suite 201
St. Charles, Illinois 60174

USER NAME = hferstl	DESIGNED - HLF	REVISED -	
	CHECKED - AEU	REVISED -	
PLOT SCALE =	DRAWN - HLF	REVISED -	
PLOT DATE = 3/20/2013	CHECKED - AEU	REVISED -	

STATE OF ILLINOIS
DEPARTMENT OF TRANSPORTATION

CULVERT WINGWALL REPAIR DETAILS
STA. 900 + 34.74

SHEET NO. 5 OF 5 SHEETS

F.A.P. RTE.	SECTION	COUNTY	TOTAL SHEETS	SHEET NO.
599	(83MFT & 103MFT)W	ROCK ISLAND	340	175

CONTRACT NO. 64H11

FED. ROAD DIST. NO. | ILLINOIS | FED. AID PROJECT

Existing Structure:
Existing culvert is a 30" plastic culvert pipe with 29¼" inside diameter built in 2001. The exisitng culvert is approximately 55'-5½" out to out headwalls. The end sections are reinforced concrete end sections that consist of headwall and wingwalls. The upstream and downstream ends of the existing culvert will be extended with a concrete end section. One lane of traffic to be maintained at all times utilizing staged construction.

No salvage.

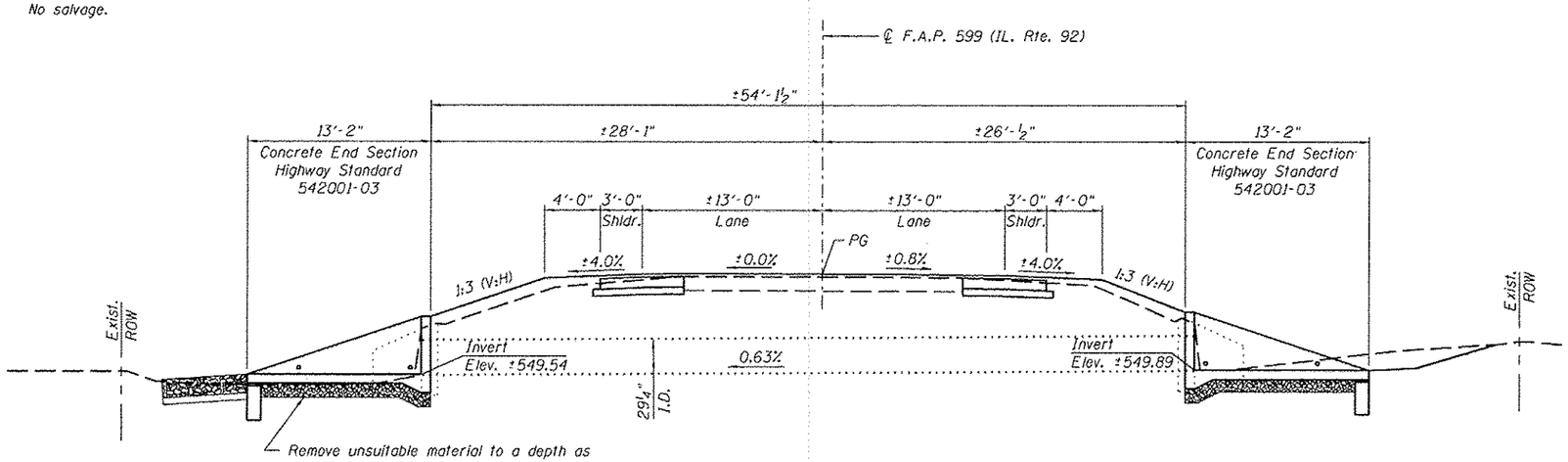

Remove unsuitable material to a depth as directed by the Engineer and replace with Rock Fill. A depth of 1'-0" has been assumed to determine quantities. Typ.

LONGITUDINAL SECTION

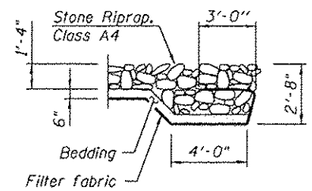

SECTION A-A

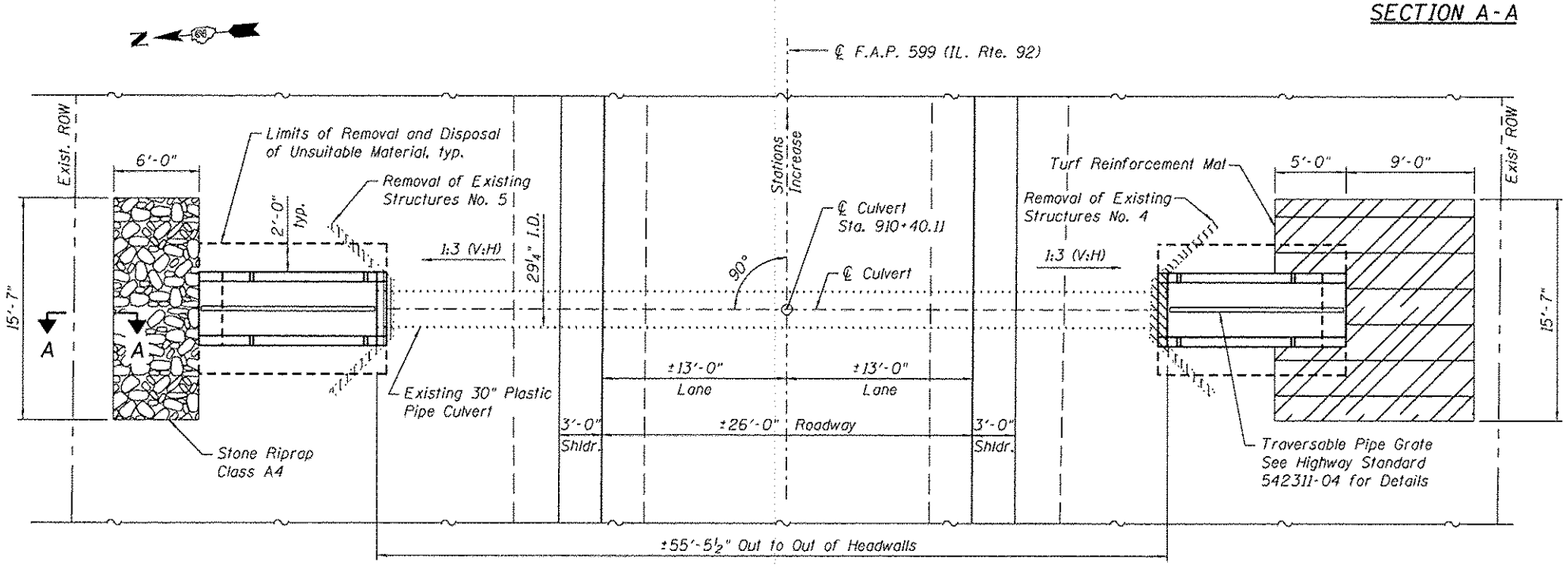

PLAN

GENERAL NOTES

1. Plan dimensions and details have been taken from existing plans or survey/field checks. As such, these dimensions and details are subject to nominal construction variations. The Contractor shall field verify existing dimensions and details affecting new construction and make necessary approved adjustments prior to construction or ordering of materials. Such variations shall not be cause for additional compensation for a change in scope of the work, however, the Contractor will be paid for the quantity actually furnished at the unit price bid for the work.

TOTAL BILL OF MATERIAL

ITEM	UNIT	TOTAL
Turf Reinforcement Mat	Sq. Yd.	21
Stone Riprap, Class A4	Sq. Yd.	11
Filter Fabric	Sq. Yd.	11
Removal of Existing Structures No. 4	Each	1
Removal of Existing Structures No. 5	Each	1
Removal And Disposal Of Unsuitable Material For Structures	Cu. Yd.	9
Traversable Pipe Grate	Foot	22.7
Concrete End Section, Standard 542001, 30", 1:3	Each	2
Rock Fill	Ton	16

DESIGN SPECIFICATIONS

2002 AASHTO Bridge Design Specifications

DESIGN STRESSES

FIELD UNITS

f'c = 3,500 psi
fy = 60,000 psi (Reinforcement)

STATE OF ILLINOIS
ANDREW E. UNDERWAGER
081-006218
CHICAGO, IL
LICENSED STRUCTURAL ENGINEER

Signature: Andrew E. Underwager
Date 3-13-2013
License Expires: 11-30-2014

GENERAL PLAN & ELEVATION
ILLINOIS ROUTE 92
F.A.P. RTE 599 - SEC. (83MFT & 103MFT)W
ROCK ISLAND COUNTY
STATION 910+40.11

FILE NAME = W:\Projects\2010\120128 PTB 157\25\cadd\Structural\Dgn\W0 #3 IL 92 Culverts\Section910+40.11\Final Submittal 130320\910+40.11-64H11-001-GPE.dgn

WILLS BURKE KELSEY ASSOCIATES LTD. 116 West Main Street, Suite 201 St. Charles, Illinois 60174	USER NAME = hforest	DESIGNED - HLF	REVISED -
		CHECKED - AEU	REVISED -
	PLOT SCALE =	DRAWN - HLF	REVISED -
	PLOT DATE = 3/20/2013	CHECKED - AEU	REVISED -

STATE OF ILLINOIS
DEPARTMENT OF TRANSPORTATION

GENERAL PLAN & ELEVATION
STA. 910+40.11
SHEET NO. 1 OF 1 SHEETS

F.A.P. RTE.	SECTION	COUNTY	TOTAL SHEETS	SHEET NO.
599	(83MFT & 103MFT)W	ROCK ISLAND	340	176
		CONTRACT NO. 64H11		
FED. ROAD DIST. NO.	ILLINOIS	FED. AID PROJECT		

Existing Structure:
Double 9'x 6' box culvert built in 1947 under Section 103.
The existing box culvert wingwalls on the north and south ends will be removed and steel sheet pile wingwalls constructed. One lane of traffic to be maintained at all times utilizing staged construction.

No salvage.

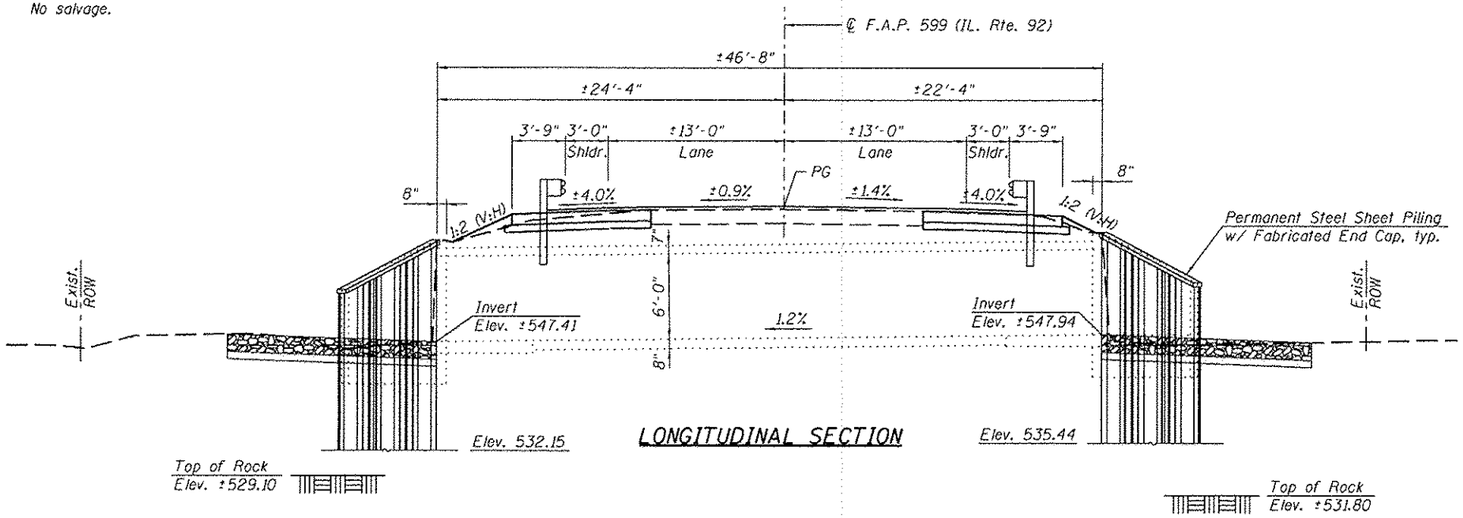

LONGITUDINAL SECTION

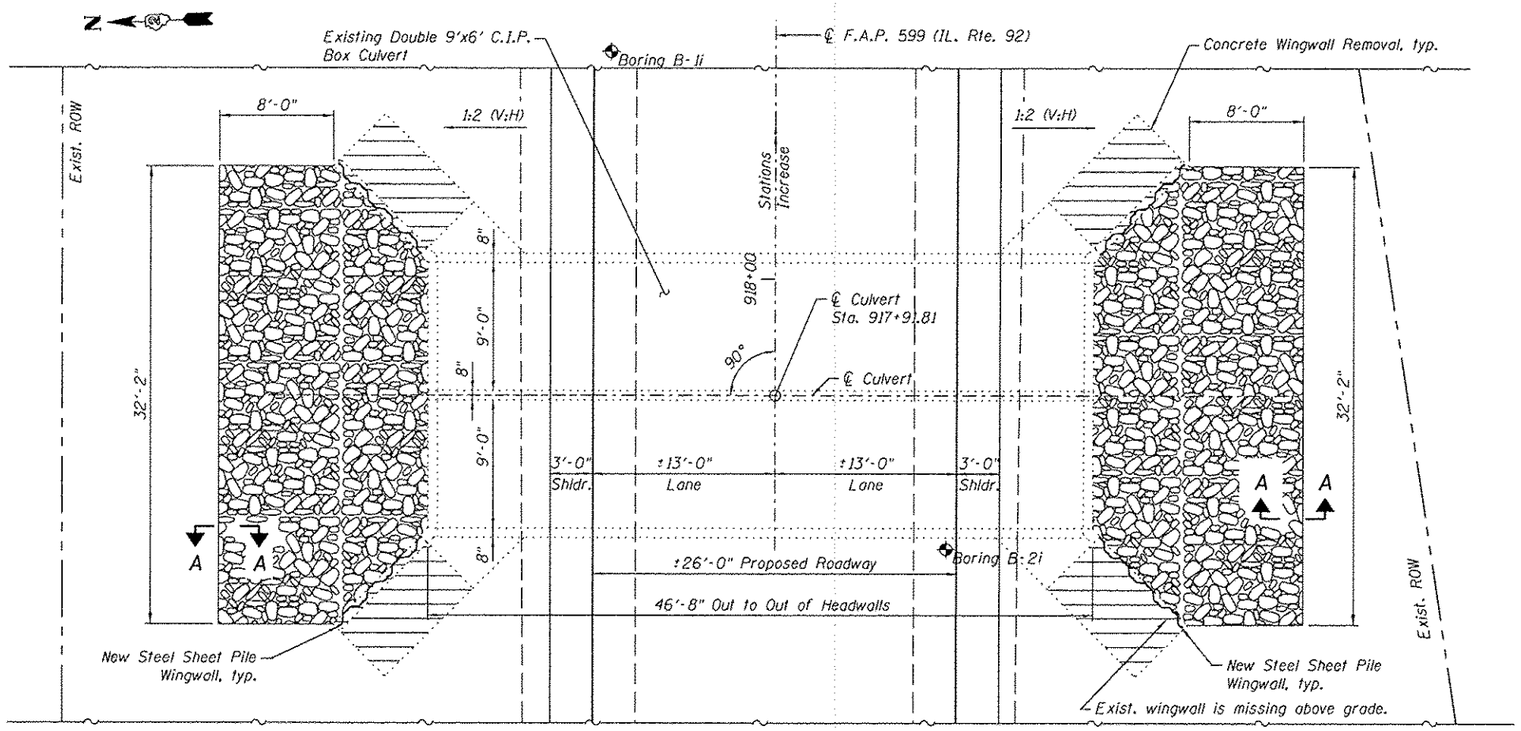

PLAN

GENERAL NOTES

1. The permanent steel sheet piling for the wingwalls shall conform to the special provision Permanent Steel Sheet Piling.
2. The minimum effective section modulus for the Permanent Steel Sheet Piling shall be 4.0 in^3/ft.
3. The fabricated steel cap shall be AASHTO M270 Grade 50W. The cap, bolts, nuts and washers shall not be paid for separately, but shall be included in the cost for Permanent Steel Sheet Piling.
4. Fasteners shall be AASHTO M164 Type 3. Bolts $\frac{1}{2}$"φ, holes $\frac{5}{8}$"φ.
5. New coarse aggregate shall be placed behind the existing headwall for the full length of the headwall and shall be 12" wide by 6" high. The coarse aggregate shall be gradation CA 7 or CA 11 material. This item shall not be paid for separately, but shall be included in the cost of Concrete Wingwall Removal.
6. Plan dimensions and details relative to existing plans are subject to nominal construction variations. The Contractor shall field verify existing dimensions and details affecting new construction and make necessary approved adjustments prior to construction or ordering of materials. Such variatioins shall not be cause for additional compensatiion for a change in scoope of the work, however, the Contractor will be paid for the quantity actually furnished at the unit price bid for the work.

TOTAL BILL OF MATERIAL

ITEM	UNIT	TOTAL
Concrete Wingwall Removal	Each	4
Stone Riprap, Class A4	Sq. Yd.	96
Filter Fabric	Sq. Yd.	96
Permanent Steel Sheet Piling	Sq. Ft.	743
Name Plate	Each	1

INDEX OF SHEETS

1. General Plan & Elevation
2. Box Culvert End Section Details
3. Soil Boring Logs

STATION 917+91.81
BUILT BY
STATE OF ILLINOIS
LOADING HL-93
STRUCTURE NO. 081-1051

NAME PLATE
See Std. 515001

DESIGN SPECIFICATIONS

2002 AASHTO Standard Specifications

DESIGN STRESSES

FIELD UNITS

fy = 38,500 psi (Permanent Sheet Piling)
fy = 50,000 psi (AASHTO M270, Grade 50W)

STATE OF ILLINOIS
ANDREW E. UNDERWAGER
081-006218
CHICAGO, IL
LICENSED STRUCTURAL ENGINEER

Signature: Andrew E Underwager
Date 3-13-2013
License Expires: 11-30-2014

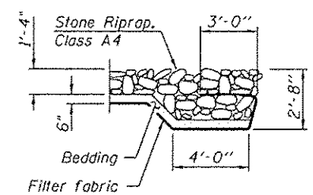

SECTION A-A

GENERAL PLAN & ELEVATION
ILLINOIS ROUTE 92
F.A.P. RTE 599 - SEC. (83MFT & 103MFT)W
ROCK ISLAND COUNTY
STATION 917+91.81
STRUCTURE NO. 081-1051

FILE NAME = W:\Projects\2018\182128 PTB 157\25\cadd\Structural\Dgn\WD #3 IL 92 Culverts\Station917+91.81\Final Submittal 13.8328\917+91.81-64H11-B81-SPE.dgn

WILLS BURKE KELSEY ASSOCIATES LTD. 116 West Main Street, Suite 201 St. Charles, Illinois 60174	USER NAME = hfarstl	DESIGNED - AEU	REVISED -
		CHECKED - DLS	REVISED -
	PLOT SCALE =	DRAWN - AWH	REVISED -
	PLOT DATE = 3/20/2013	CHECKED - AEU	REVISED -

STATE OF ILLINOIS
DEPARTMENT OF TRANSPORTATION

GENERAL PLAN & ELEVATION - 917+91.81
STRUCTURE NO. 081-1051
SHEET NO. 1 OF 3 SHEETS

F.A.P. RTE.	SECTION	COUNTY	TOTAL SHEETS	SHEET NO.
599	(83MFT & 103MFT)W	ROCK ISLAND	340	177
		CONTRACT NO. 64H11		
FED. ROAD DIST. NO.	ILLINOIS	FED. AID PROJECT		

*Existing plans not available.
Contractor to field verify dimensions and report any discrepancies to the Engineer.

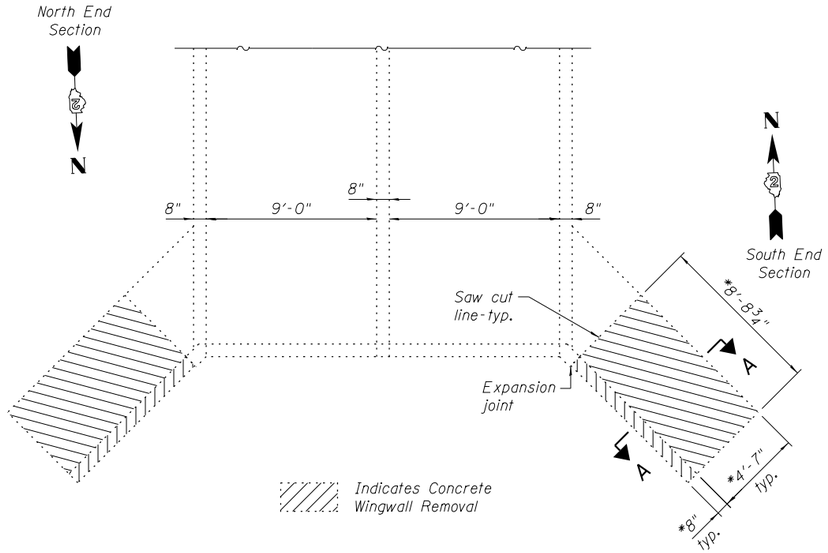

REMOVAL PLAN

Exisitng north and south end section of Double 9'x6' reinforced concrete box culvert - Sta 917+91.81

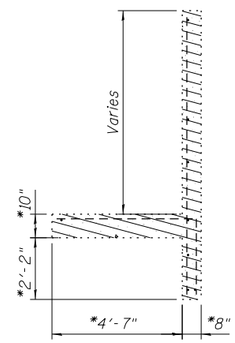

SECTION A-A

Existing reinforced concrete wingwall to be removed

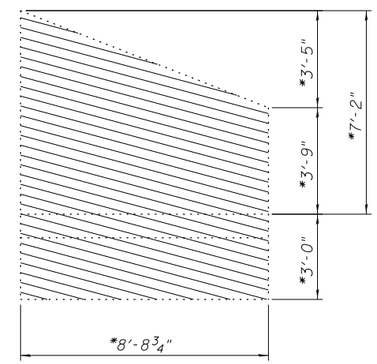

ELEVATION

Existing reinforced concrete wingwall to be removed

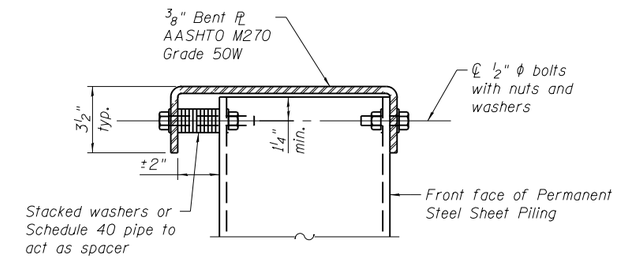

SECTION C-C

Fabricated steel cap

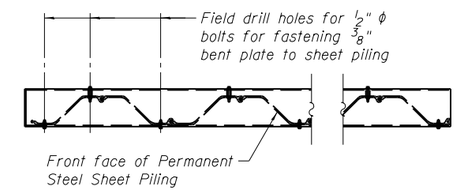

PLAN

Showing connection of fabricated steel cap to Permanent Steel Sheet Piling

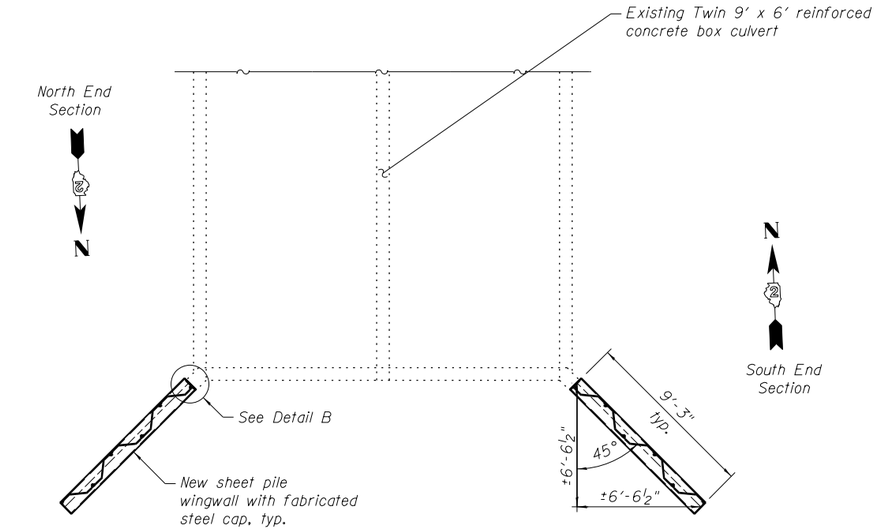

PLAN

Showing new sheet pile wingwalls

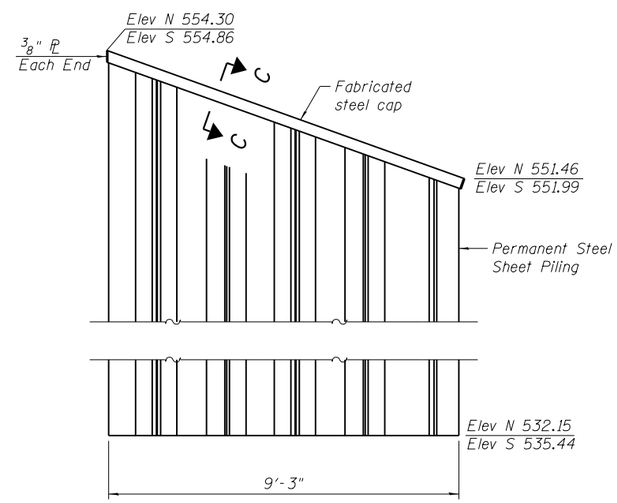

WINGWALL ELEVATION

The sheet piling for the wingwalls shall conform to the special provision Permanent Steel Sheet Piling. The minimum effective section modulus for the Permanent Steel Sheet Piling shall be 4.0 in³/ft.

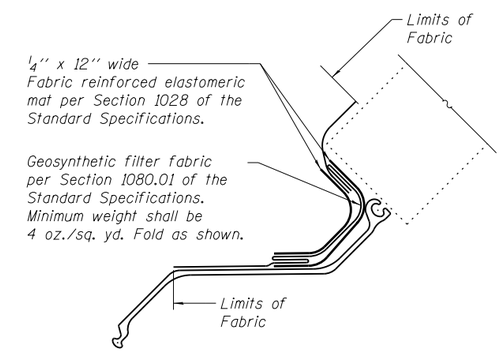

DETAIL B

Fabric reinforced elastomeric mat and geosynthetic filter fabric shall not be paid for separately but shall be included in the cost of Permanent Steel Sheet Piling.

FILE NAME = W:\Projects\2010\100120 PTB 157\25\cadd\Structural\Dgn\WO #3 IL 92 Culverts\Station917+91.81\Final Submittal 130320\917-91.81-64H11-002-SPILE.dgn

WILLS BURKE KELSEY ASSOCIATES LTD. 116 West Main Street, Suite 201 St. Charles, Illinois 60174	USER NAME = hferstl	DESIGNED - AWH	REVISED -	STATE OF ILLINOIS DEPARTMENT OF TRANSPORTATION	BOX CULVERT END SECTION DETAILS – STA. 917+91.81 LT. & RT. STRUCTURE NO. 081-1051
		CHECKED - AEU	REVISED -		
	PLOT SCALE =	DRAWN - AWH	REVISED -		
	PLOT DATE = 3/20/2013	CHECKED - AEU	REVISED -		SHEET NO. 2 OF 3 SHEETS

F.A.P. RTE.	SECTION	COUNTY	TOTAL SHEETS	SHEET NO.
599	(83MFT & 103MFT)W	ROCK ISLAND	340	178
		CONTRACT NO. 64H11		
FED. ROAD DIST. NO.	ILLINOIS	FED. AID PROJECT		

Illinois Department of Transportation
Division of Highways
Illinois Department of Transportation/D-2

SOIL BORING LOG

Page 1 of 1

Date 10/23/03

ROUTE FA 599 DESCRIPTION P92-029-79 Box culvert, IL 92, 1.7 m W. of Andalusia LOGGED BY C. Jenkins

SECTION (83MAFT&103MFT)W&RS LOCATION Andalusia Twp. - NW, SEC. 29, TWP. 17N, RNG. 3W

COUNTY Rock Island DRILLING METHOD Hollow Stem Auger HAMMER TYPE CME-45 Automatic

STRUCT. NO.
Station 917+97

BORING NO. B-1i
Station 918+16
Offset 11.50ft Lt CL
Ground Surface Elev. 556.60 ft

Surface Water Elev. ft
Stream Bed Elev. 90.20 ft

Groundwater Elev.:
First Encounter 546.6 ft ▼
Upon Completion 535.6 ft ▽
After Hrs. ft

Description	Elev.	DEPTH (ft)	BLOWS (/6")	UCS Qu (tsf)	MOIST (%)
GRAVEL					
MEDIUM black SILTY LOAM				0.6 P	17.0
	554.10				
MEDIUM gray SILTY LOAM with GRAVEL			3		
			3	0.8 P	19.0
	552.60		6		
Same as above		-5	4		
			3	0.5 P	14.0
	550.10		3		
STIFF gray SILTY CLAY with GRAVEL			2		
			2	1.3 S	20.0
	547.60		4		
STIFF gray/brown SANDY LOAM with GRAVEL		▼-10	3		
			4	1.3 S	19.0
	545.10		4		
MEDIUM gray with rust SILTY CLAY			2		
			1	0.5 S	28.0
	542.60		3		
MEDIUM gray SILTY CLAY		-15	0		
			1	0.5 B	32.0
	540.10		1		
SOFT gray/brown SILT with GRAVEL			1		
			1	0.3 P	29.0
	537.60		3		
		-20			

Description	Elev.	DEPTH (ft)	BLOWS (/6")	UCS Qu (tsf)	MOIST (%)
SOFT gray SILT			2		
	▽		1	0.3 P	33.0
	535.10		3		
SOFT gray SANDY LOAM with GRAVEL			1		
			0	0.4 P	29.0
			2		
	532.10				
MEDIUM gray SAND & GRAVEL		-25	8		
			9		
	530.10		14		
VERY DENSE gray SHALE			65		
			35		
	527.60		100/9" PEN		
End of Boring		-30			
		-35			
		-40			

The Unconfined Compressive Strength (UCS) Failure Mode is indicated by (B-Bulge, S-Shear, P-Penetrometer)
The SPT (N value) is the sum of the last two blow values in each sampling zone (AASHTO T206)

BBS, from 137 (Rev. 8-99)

Illinois Department of Transportation
Division of Highways
Illinois Department of Transportation/D-2

SOIL BORING LOG

Page 1 of 1

Date 10/23/03

ROUTE FA 599 DESCRIPTION P92-029-79 Box culvert, IL 92, 1.7 m. W. of Andalusia LOGGED BY C. Jenkins

SECTION (83MAFT&103MFT)W&RS LOCATION Andalusia Twp. - NW, SEC. 29, TWP. 17N, RNG. 3W

COUNTY Rock Island DRILLING METHOD Hollow Stem Auger HAMMER TYPE CME-45 Automatic

STRUCT. NO.
Station 917+97

BORING NO. B-2i
Station 917+81
Offset 12.00ft Rt CL
Ground Surface Elev. 556.00 ft

Surface Water Elev. ft
Stream Bed Elev. 90.20 ft

Groundwater Elev.:
First Encounter 546.0 ft ▼
Upon Completion 533.0 ft ▽
After Hrs. ft

Description	Elev.	DEPTH (ft)	BLOWS (/6")	UCS Qu (tsf)	MOIST (%)
GRAVEL					
MEDIUM brown SILTY LOAM				0.8 P	14.0
	553.50				
STIFF gray/brown mottled SILTY LOAM with some GRAVEL			3		
			2	1.1 P	19.0
	552.00		4		
SOFT gray SILTY LOAM		-5	1		
			1	0.4 P	22.0
	549.50		2		
MEDIUM black SILTY CLAY with a SAND lens			2		
			2	0.5 B	30.0
	547.00		2		
MEDIUM gray SILTY CLAY with a SAND lens		▼-10	1		
			1	0.5 P	26.0
	544.50		2		
SOFT gray/brown SILTY LOAM			1		
			1	0.3 P	36.0
	542.00		2		
SOFT gray SILT		-15	1		
			2	0.3 P	35.0
	539.50		2		
MEDIUM gray SILT			0		
			1	0.5 B	30.0
	537.00		3		
		-20			

Description	Elev.	DEPTH (ft)	BLOWS (/6")	UCS Qu (tsf)	MOIST (%)
No Sample			2		
			2		
			2		
	534.00				
DENSE gray SHALE	▽		1		
			8		
Auger Refusal at 24.2'			38		
	531.80				
End of Boring		-25			
		-30			
		-35			
		-40			

The Unconfined Compressive Strength (UCS) Failure Mode is indicated by (B-Bulge, S-Shear, P-Penetrometer)
The SPT (N value) is the sum of the last two blow values in each sampling zone (AASHTO T206)

BBS, from 137 (Rev. 8-99)

FILE NAME = W:\Projects\2010\100120 PTB 157\25\cadd\Structural\Dgn\WD #3 IL 92 Culverts\Station917+91.81\Final Submittal 13.0220\917+91.81-64H11-003-SOIL.dgn

WILLS BURKE KELSEY ASSOCIATES LTD.
116 West Main Street, Suite 201
St. Charles, Illinois 60174

USER NAME = hferstl	DESIGNED -	REVISED -
	CHECKED -	REVISED -
PLOT SCALE =	DRAWN - AWH	REVISED -
PLOT DATE = 3/20/2013	CHECKED - AEU	REVISED -

STATE OF ILLINOIS
DEPARTMENT OF TRANSPORTATION

SOIL BORING LOGS – STA. 917 + 91.81
STRUCTURE NO. 081–1051

SHEET NO. 3 OF 3 SHEETS

F.A.P. RTE.	SECTION	COUNTY	TOTAL SHEETS	SHEET NO.
599	(83MFT & 103MFT)W	ROCK ISLAND	340	179
		CONTRACT NO. 64H11		
FED. ROAD DIST. NO.	ILLINOIS	FED. AID PROJECT		

Existing Structure:
Single 4'x 3' box culvert built in 1947 under Section 83. The existing box will be extended to the north and south and a cast in place end section constructed. One lane traffic to be maintained at all times utilizing staged construction.

No salvage.

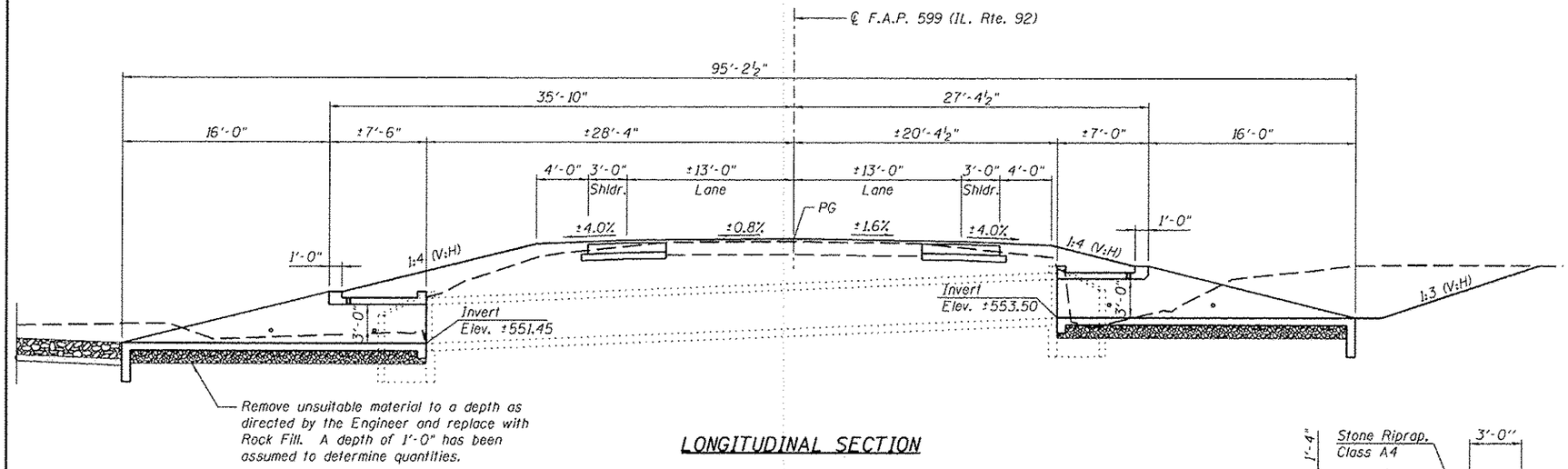

LONGITUDINAL SECTION

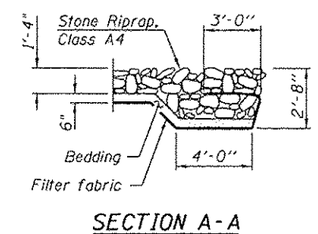

SECTION A-A

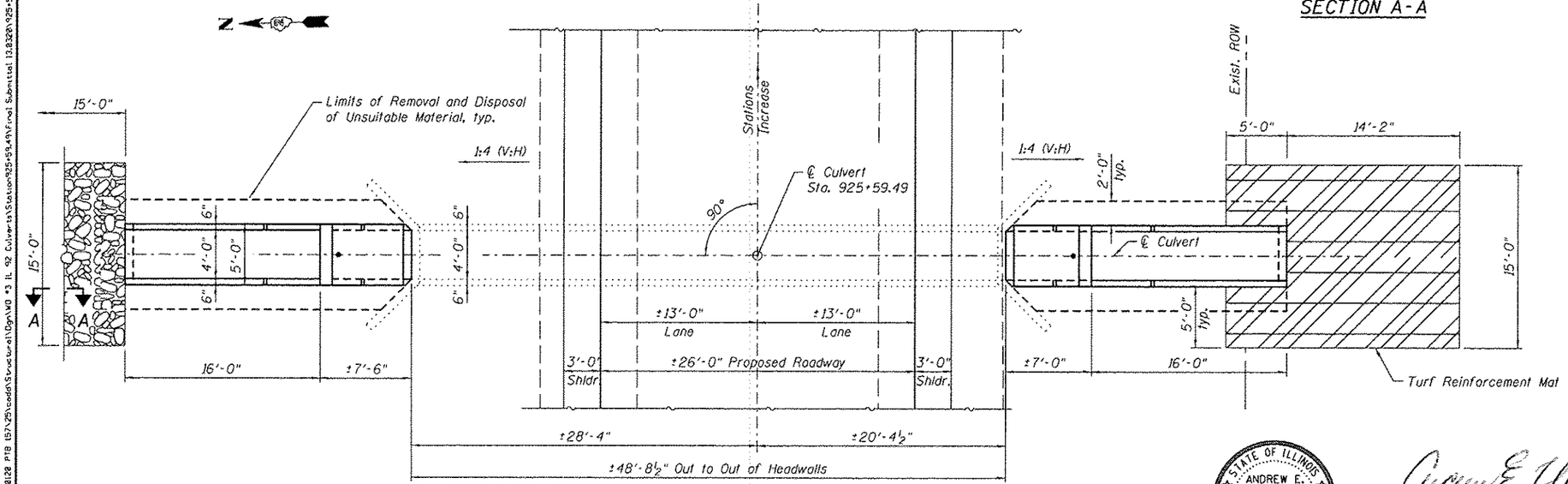

PLAN

GENERAL NOTES

1. Plan dimensions and details relative to existing plans are subject to nominal construction variations. The Contractor shall field verify existing dimensions and details affecting new construction and make necessary approved adjustments prior to construction or ordering of materials. Such variatioins shall not be cause for additional compensatiion for a change in scoope of the work, however, the Contractor will be paid for the quantity actually furnished at the unit price bid for the work.
2. All exposed concrete edges shall be chamfered ¾" unless otherwise noted.
3. All construction joints shall be bonded.
4. This work shall be done according to the applicable portion of of 501, 503, 505, 508, 540 and 584 of the Standard Specifications.
5. A precast option is not allowed at this location.
6. Drainage holes shall conform to the requirements of Article 503.11 of the Standard Specifications.
7. The Contract unit price "Each" for Box Culvert End Sections of the culvert end section specified shall include Concrete Box Culverts, Reinforcement Bars, Earth Excavation where required and necessary grading to fit the structures as shown, or to the slope.
8. Nonwoven geotextile fabric shall conform to the requirements of Art. 1080.01 of the Standard Specifications. The minimum weight of the fabric shall be 6 ounces per square yard.

TOTAL BILL OF MATERIAL

ITEM	UNIT	TOTAL
Turf Reinforcement Mat	Sq. Yd.	29
Stone Riprap, Class A4	Sq. Yd.	25
Filter Fabric	Sq. Yd.	25
Removal and Disposal of Unsuitable Material for Structures	Cu. Yd.	16
Box Culvert End Sections, Culvert No. 08	Each	2
Traversable Pipe Grate	Foot	30.2
Rock Fill	Ton	28

DESIGN SPECIFICATIONS

2002 AASHTO Standard Specifications

DESIGN STRESSES

FIELD UNITS

f'c = 3,500 psi
fy = 60,000 psi (Reinforcement)

INDEX OF SHEETS

1. General Plan & Elevation
2. Box Culvert End Section
3. Box Culvert End Section
4. Box Culvert End Section Details
5. Traversable Steel Pipe System

STATE OF ILLINOIS
ANDREW E. UNDERWAGER
081-006218
CHICAGO, IL
LICENSED STRUCTURAL ENGINEER

Signature: Andrew E. Underwager
Date 3-13-2013
License Expires: 11-30-2014

GENERAL PLAN & ELEVATION
ILLINOIS ROUTE 92
F.A.P. RTE 599 - SEC. (83MFT & 103MFT)W
ROCK ISLAND COUNTY
STATION 925+59.49

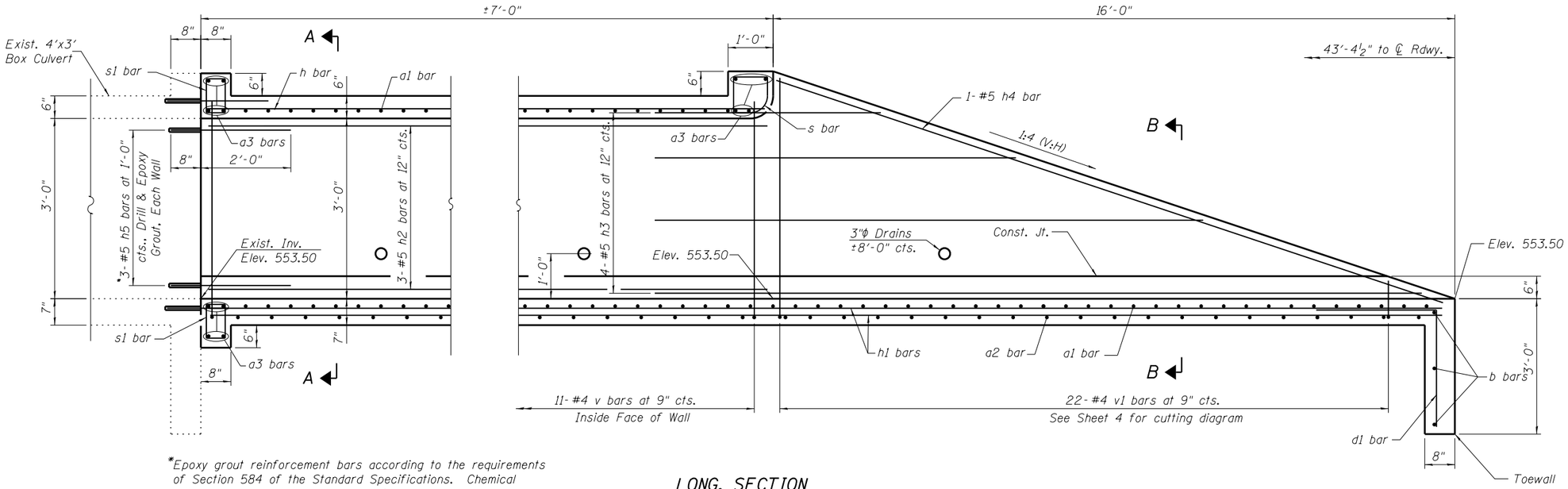

*Epoxy grout reinforcement bars according to the requirements of Section 584 of the Standard Specifications. Chemical adhesive system shall be capable of achieving a minimum proof load of 5,000 lb. Cost included in the pay item Box Culvert End Sections, Culvert No. 08.

LONG. SECTION

Order v1 and h3 bars full length. Cut to fit as shown and use remainder of bars in opposite wall.

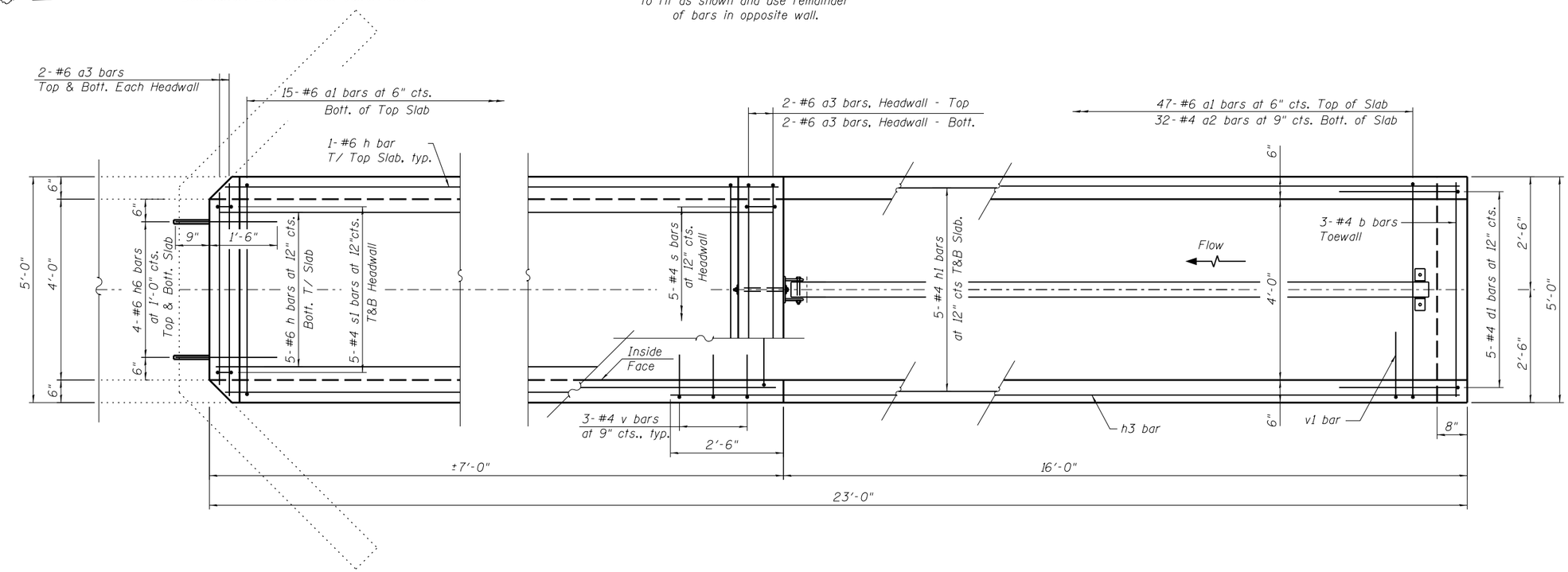

PLAN

WILLS BURKE KELSEY ASSOCIATES LTD. 116 West Main Street, Suite 201 St. Charles, Illinois 60174	USER NAME = hferstl	DESIGNED - AEU	REVISED -	STATE OF ILLINOIS DEPARTMENT OF TRANSPORTATION	BOX CULVERT END SECTION STA. 925+59.49 RT.	F.A.P. RTE. 599	SECTION (83MFT & 103MFT)W
		CHECKED - DLS	REVISED -			COUNTY ROCK ISLAND	TOTAL SHEETS 340 / SHEET NO. 181
	PLOT SCALE =	DRAWN - AH	REVISED -			CONTRACT NO. 64H11	
	PLOT DATE = 3/20/2013	CHECKED - AEU	REVISED -		SHEET NO. 2 OF 5 SHEETS	FED. ROAD DIST. NO.	ILLINOIS FED. AID PROJECT

FILE NAME = W:\Projects\2010\100120 PTB 157\25\cadd\Structural\Dgn\WO #3 IL 92 Culverts\Station%25+59.49%Final Submittal 13.0320%25+59.49-64H11-002-Culvert Ext. Rt..dgn

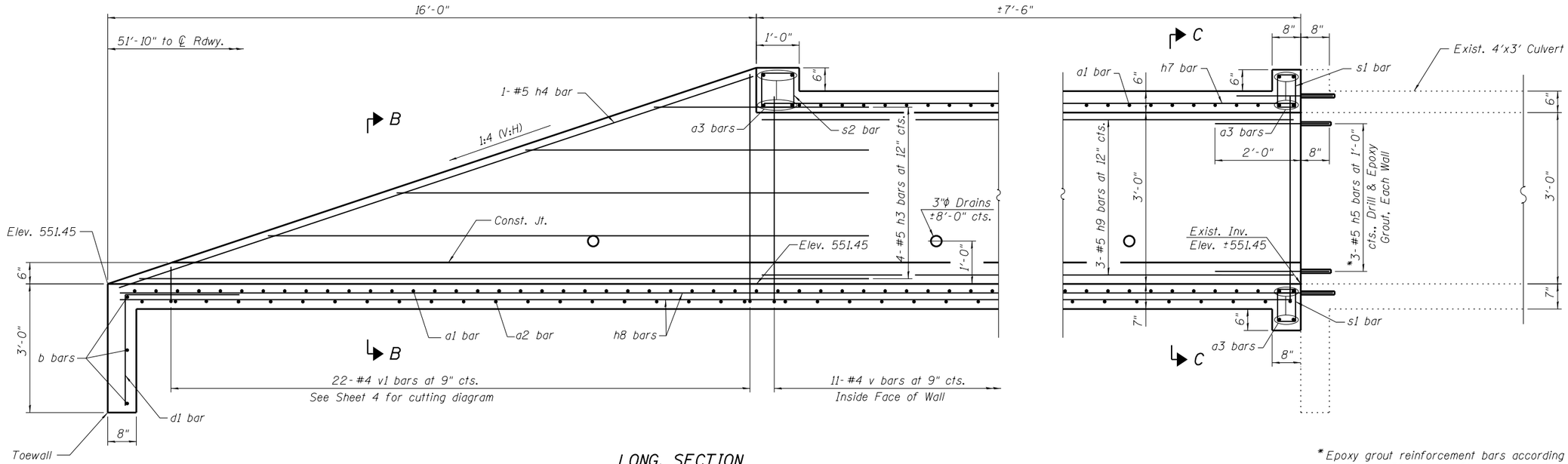

LONG. SECTION

Order v1 and h3 bars full length. Cut to fit as shown and use remainder of bars in opposite wall.

*Epoxy grout reinforcement bars according to the requirements of Section 584 of the Standard Specifications. Chemical adhesive system shall be capable of achieving a minimum proof load of 5,000 lb. Cost included in the pay item Box Culvert End Sections, Culvert No. 08.

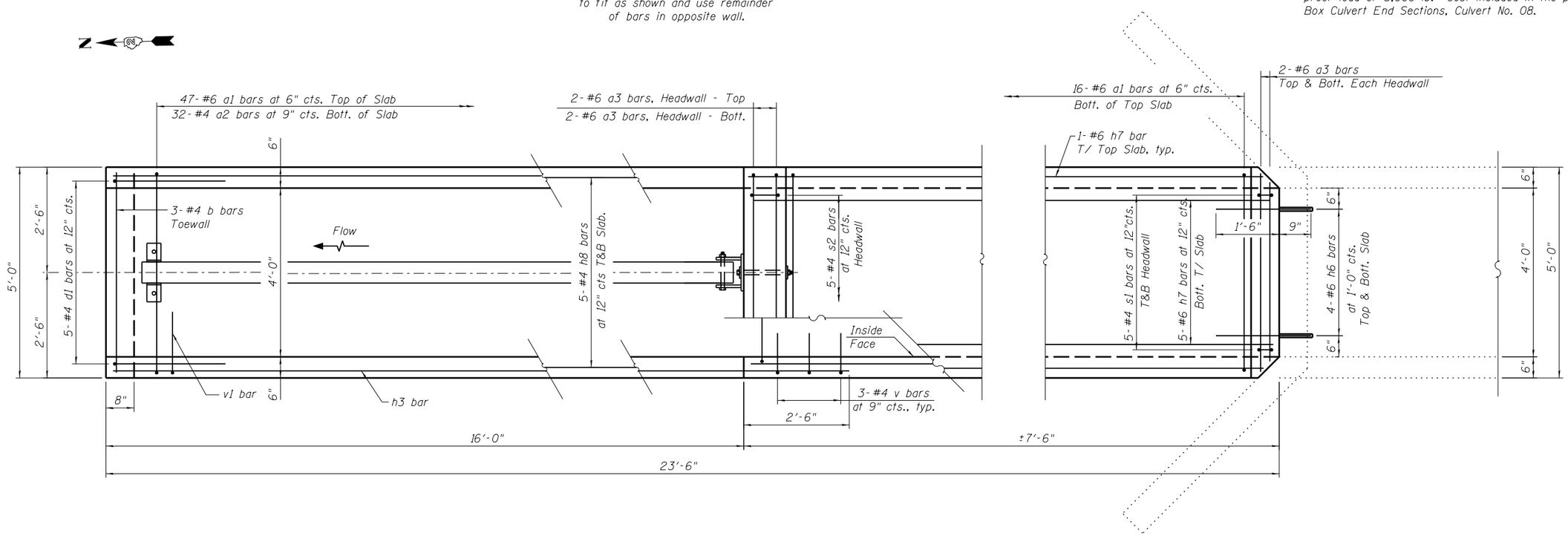

PLAN

WILLS BURKE KELSEY ASSOCIATES LTD. 116 West Main Street, Suite 201 St. Charles, Illinois 60174	USER NAME = hferstl	DESIGNED - AEU	REVISED -
		CHECKED - DLS	REVISED -
	PLOT SCALE =	DRAWN - AH	REVISED -
	PLOT DATE = 3/20/2013	CHECKED - AEU	REVISED -

STATE OF ILLINOIS
DEPARTMENT OF TRANSPORTATION

BOX CULVERT END SECTION
STA. 925+59.49 LT.

SHEET NO. 3 OF 5 SHEETS

F.A.P. RTE.	SECTION	COUNTY	TOTAL SHEETS	SHEET NO.
599	(83MFT & 103MFT)W	ROCK ISLAND	340	182
		CONTRACT NO. 64H11		
FED. ROAD DIST. NO.	ILLINOIS	FED. AID PROJECT		

FILE NAME = W:\Projects\2010\100120 PTB 157\25\cadd\Structural\Dgn\WO #3 IL 92 Culverts\Station%25+59.49\Final Submittal 13.0320\925+59.49-64H11-003-Culvert Ext.L.t..dgn

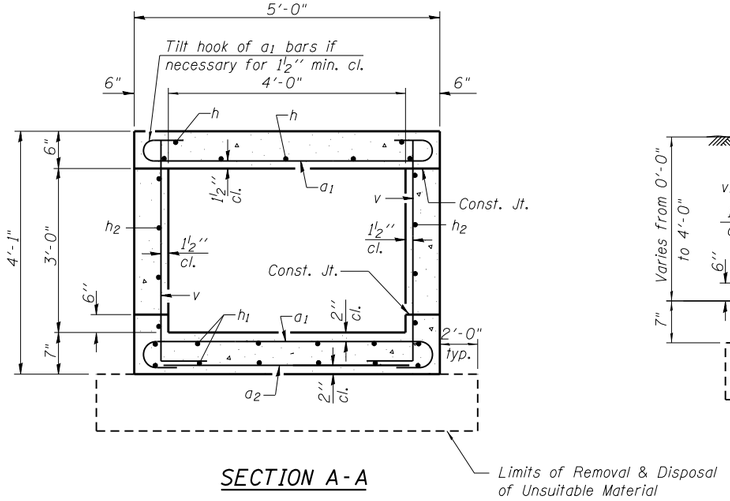

SECTION A-A

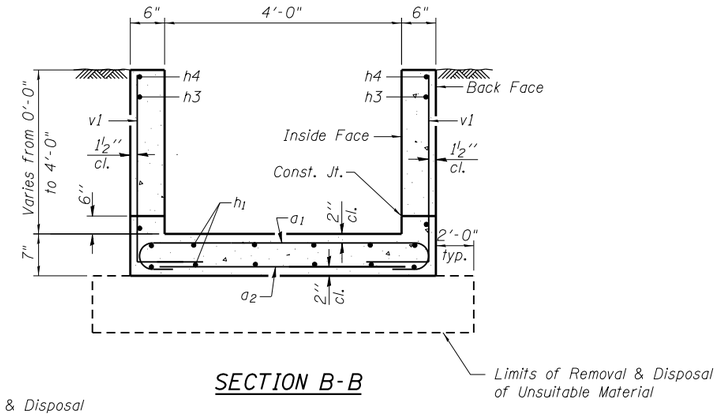

SECTION B-B

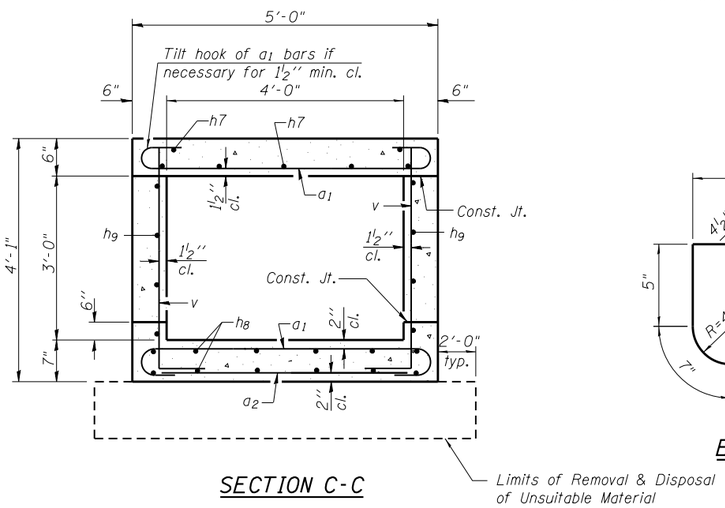

SECTION C-C

BILL OF MATERIAL
(For Information Only - Rt. Extension)

Bar	No.	Size	Length	Shape
a_1	62	#6	6'-0"	
a_2	32	#4	4'-8"	
a_3	12	#6	4'-8"	
b	3	#4	4'-8"	
d_1	5	#4	5'-4"	
h	7	#6	6'-9"	
h_1	10	#4	22'-8"	
h_2	6	#5	6'-9"	
h_3	4	#5	22'-6"	
h_4	2	#5	16'-3"	
h_5	6	#5	2'-8"	
h_6	8	#6	2'-3"	
s	5	#4	3'-9"	
s_1	10	#4	3'-1"	
v	28	#4	4'-7"	
v_1	22	#4	7'-8"	
DESCRIPTION			UNIT	QTY.
Concrete Box Culverts			Cu. Yd.	5.6
Reinforcement Bars			Pound	1,440

BILL OF MATERIAL
(For Information Only - Lt. Extension)

Bar	No.	Size	Length	Shape
a_1	63	#6	6'-0"	
a_2	32	#4	4'-8"	
a_3	12	#6	4'-8"	
b	3	#4	4'-8"	
d_1	5	#4	5'-4"	
h_3	4	#5	22'-6"	
h_4	2	#5	16'-3"	
h_5	6	#5	2'-8"	
h_6	8	#6	2'-3"	
h_7	7	#6	7'-3"	
h_8	10	#4	23'-2"	
h_9	6	#5	7'-3"	
s_1	10	#4	3'-1"	
s_2	5	#4	3'-9"	
v	28	#4	4'-7"	
v_1	22	#4	7'-8"	
DESCRIPTION			UNIT	QTY.
Concrete Box Culverts			Cu. Yd.	5.8
Reinforcement Bars			Pound	1,460

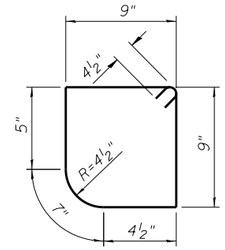

BAR s

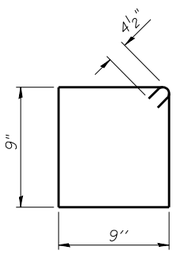

BAR s_2

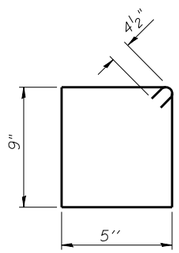

BAR s_1

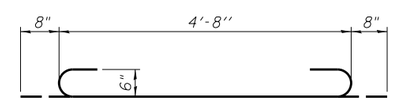

BAR a_1

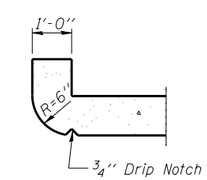

SECTION THRU HEADWALL
(Up Stream End Only)

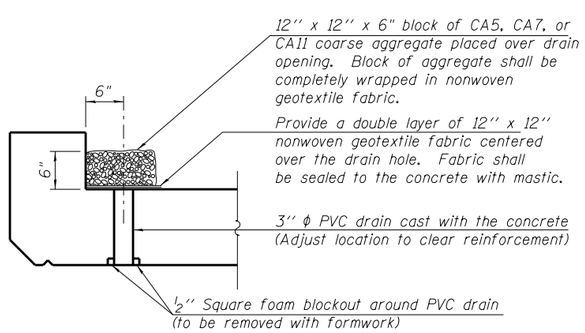

DRAIN DETAIL

(All costs associated with furnishing and constructing the above drain details will not be measured for payment but shall be included in the contract unit price for the end section.)

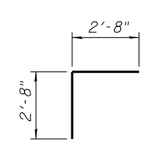

BAR d_1

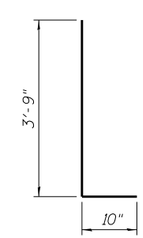

BAR v

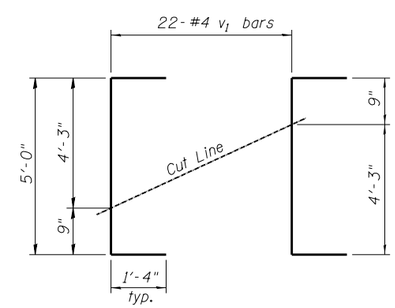

BAR v_1

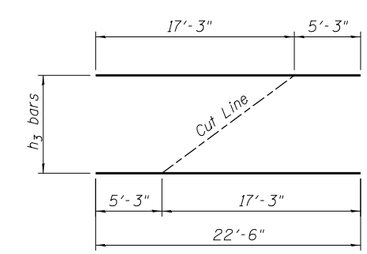

BAR h_3

FILE NAME = W:\Projects\2010\100120 PTB 157\25\cadd\Structural\Dgn\WD #3 IL 92 Culverts\Station%25+59.49\Final Submittal 13\0320%25+59.49-64H11-004-Culv.Extension Details.dgn

WILLS BURKE KELSEY ASSOCIATES LTD.
116 West Main Street, Suite 201
St. Charles, Illinois 60174

USER NAME = hferstl	DESIGNED - AEU	REVISED -	
	CHECKED - DLS	REVISED -	
PLOT SCALE =	DRAWN - AH	REVISED -	
PLOT DATE = 3/20/2013	CHECKED - AEU	REVISED -	

STATE OF ILLINOIS
DEPARTMENT OF TRANSPORTATION

BOX CULVERT END SECTION DETAILS
STA. 925 + 59.49

SHEET NO. 4 OF 5 SHEETS

F.A.P. RTE.	SECTION	COUNTY	TOTAL SHEETS	SHEET NO.
599	(83MFT & 103MFT)W	ROCK ISLAND	340	183
		CONTRACT NO. 64H11		
FED. ROAD DIST. NO.	ILLINOIS	FED. AID PROJECT		

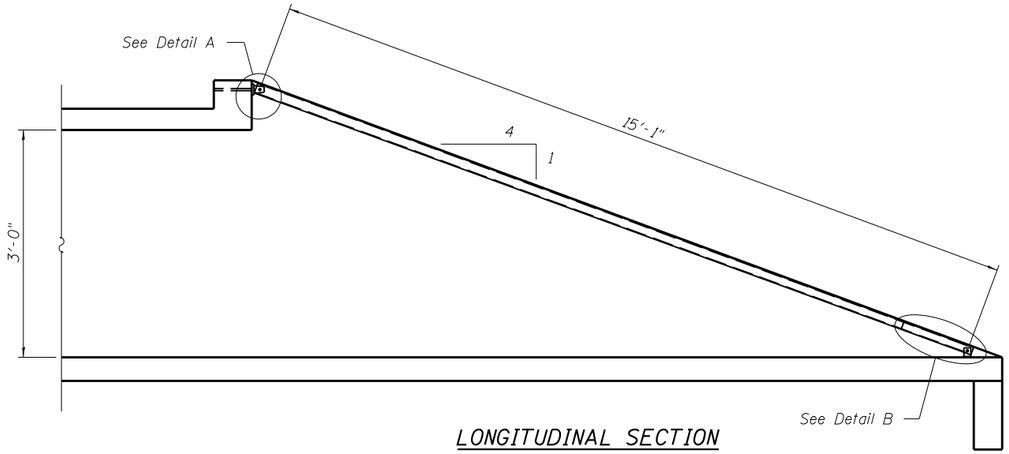

LONGITUDINAL SECTION

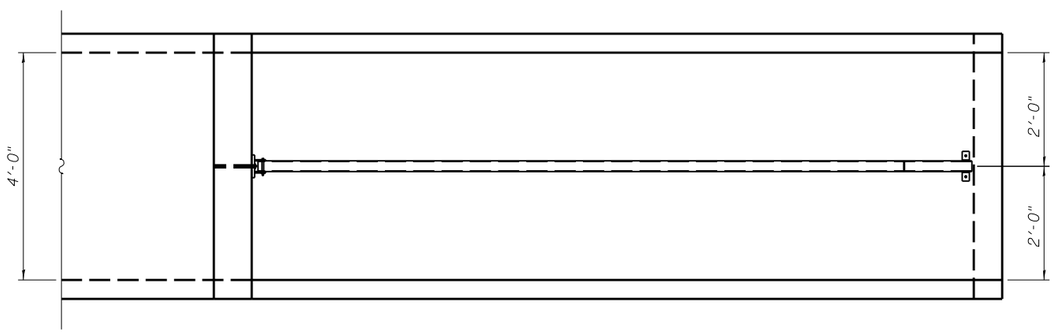

PLAN

GENERAL NOTES

Length shall be determined by the Contractor. All steel pipe shall be standard weight (Sch. 40) unless otherwise noted.

Traversable Steel Pipe System details shown for Box Culvert End Sections. Traversable Steel Pipe System details for other culvert end sections similar.

All components of the Traversable Steel Pipe System shall be galvanized according to the requirements of AASHTO M 111 or M 232 as applicable.

Fabrication of the Traversable Steel Pipe System shall conform to the requirements in Section 505 of the Standard Specifications unless noted otherwise.

Structural steel shapes and plates shall conform to the requirements of Article 1006.04 of the Standard Specifications. Steel pipes shall conform to the requirements of ASTM A 53 (Type E or S), Grade B.

Anchor rods shall conform to the requirements of ASTM F1554, Grade 105. Anchor rods shall be drilled and epoxy grouted according to the requirements of Section 584 of the Standard Specifications. The chemical adhesive system shall be capable of achieving a minimum proof load of 5000 pounds and an ultimate shear capacity of 8000 pounds per anchor.

Bolts and thru bolts shall conform to the requirements of Article 1006.08 of the Standard Specifications except threaded rods conforming to the requirements of ASTM F1554, Grade 105 may be used for the thru bolts.

The minimum edge distance from the center of a hole to the free edge of a structural shape or plate shall be 1 1/2 '' unless noted otherwise.

Bolts and anchor rods shall be snug tightened by a few impacts of an impact wrench or the full force of a worker using an ordinary spud wrench unless otherwise noted.

All cost associated with fabricating, furnishing, and installing the Traversable Steel Pipe System will be paid for at the contract unit price per lineal foot for Traversable Pipe Grate.

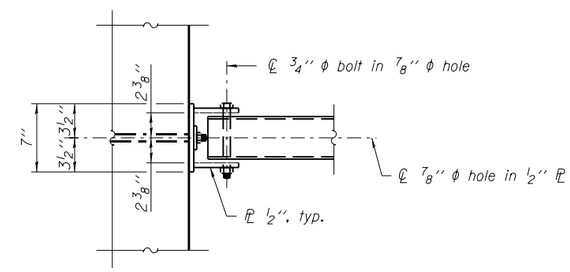

VIEW A-A

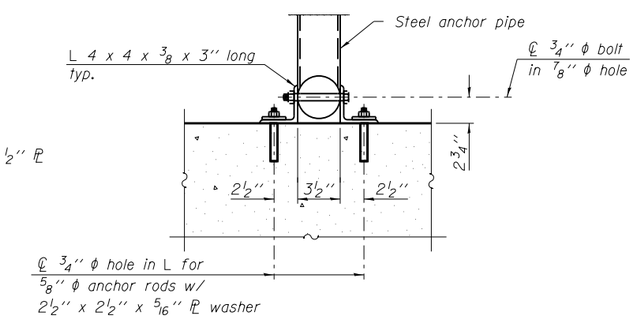

SECTION B-B

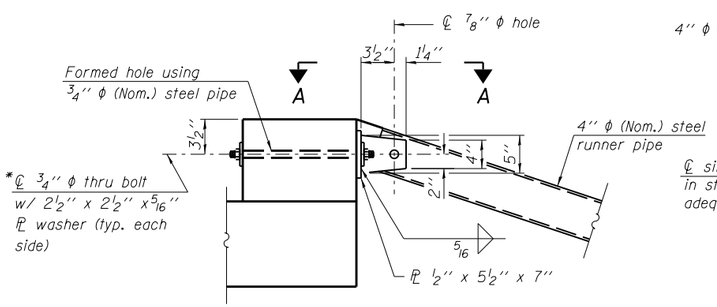

*Bolt shall be tightened per Art. 505.04(f)(2)d of the Standard Specifications

DETAIL A

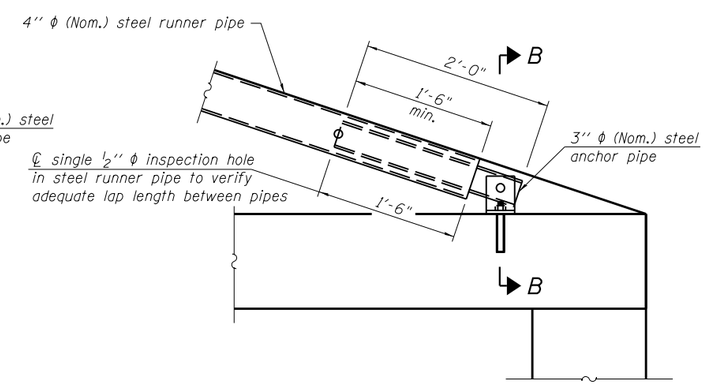

DETAIL B

*** The lap length between pipes may be adjusted in the field to accommodate construction tolerances but shall not be less than 9''.

FILE NAME = W:\Projects\2010\100120 PTB 157-25\cadd\Structural\Dgn\WO #3 IL 92 Culverts\Station925+59.49\Final Submittal 13.0320\925+59.49-64H11-005-GratingSystemDtls.dgn

WILLS BURKE KELSEY ASSOCIATES LTD. 116 West Main Street, Suite 201 St. Charles, Illinois 60174	USER NAME = hferstl	DESIGNED - AEU	REVISED -	STATE OF ILLINOIS DEPARTMENT OF TRANSPORTATION	TRAVERSABLE STEEL PIPE SYSTEM STA. 925+59.49 LT. & RT.	F.A.P. RTE.	SECTION	COUNTY	TOTAL SHEETS / SHEET NO.
		CHECKED - DLS	REVISED -			599	(83MFT & 103MFT)W	ROCK ISLAND	340 / 184
	PLOT SCALE =	DRAWN - AWH	REVISED -					CONTRACT NO. 64H11	
	PLOT DATE = 3/20/2013	CHECKED - AEU	REVISED -		SHEET NO. 5 OF 5 SHEETS	FED. ROAD DIST. NO.	ILLINOIS	FED. AID PROJECT	

Existing Structure:
Single 4'x 3' box culvert built in 1947 under Section 83. The existing box will be extended to the north and south and cast in place end sections constructed. One lane of traffic to be maintained at all times utilizing staged construction.

No salvage.

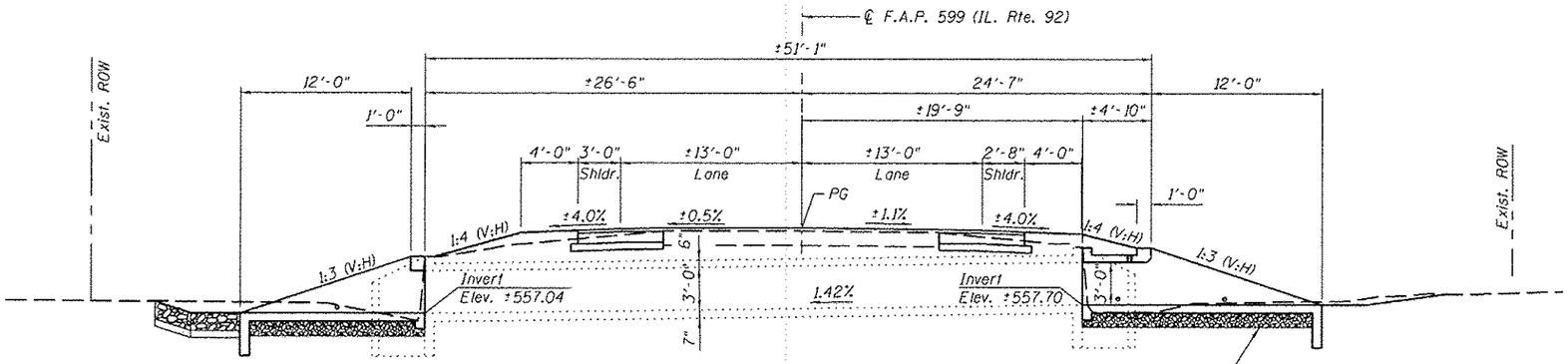

LONGITUDINAL SECTION

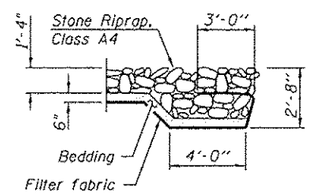

SECTION A-A

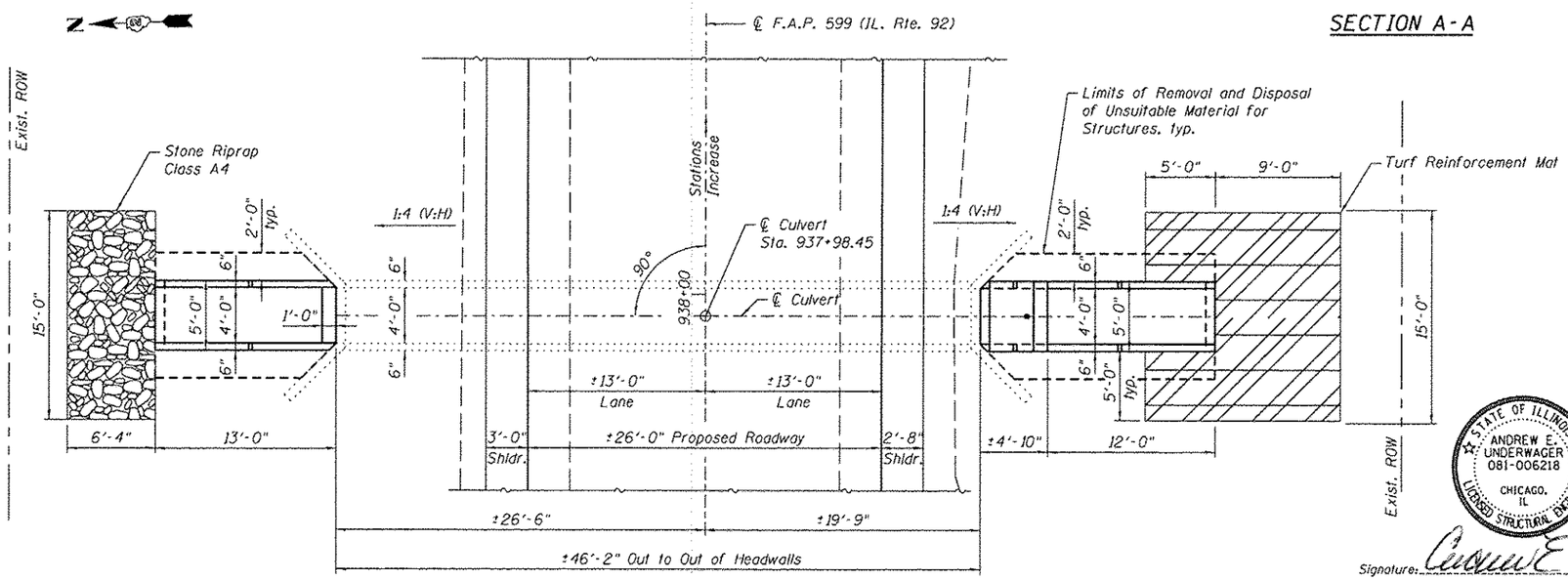

PLAN

GENERAL NOTES

1. Plan dimensions and details relative to existing plans are subject to nominal construction variations. The Contractor shall field verify existing dimensions and details affecting new construction and make necessary approved adjustments prior to construction or ordering of materials. Such variatioins shall not be cause for additional compensatiion for a change in scoope of the work, however, the Contractor will be paid for the quantity actually furnished at the unit price bid for the work.
2. All exposed concrete edges shall be chamfered $^3/_4$" unless otherwise noted.
3. All construction joints shall be bonded.
4. This work shall be done according to the applicable portion of of 501, 503, 505, 508, 540 and 584 of the Standard Specifications.
5. A precast option is not allowed at this location.
6. Drainage holes shall conform to the requirements of Article 503.11 of the Standard Specifications.
7. The Contract unit price "Each" for Box Culvert End Sections of the culvert end section specified shall include Concrete Box Culverts, Reinforcement Bars, Earth Excavation where required and necessary grading to fit the structures as shown, or to the slope.
8. Nonwoven geotextile fabric shall conform to the requirements of Art. 1080.01 of the Standard Specifications. The minimum weight of the fabric shall be 6 ounces per square yard.

TOTAL BILL OF MATERIAL

ITEM	UNIT	TOTAL
Turf Reinforcement Mat	Sq. Yd.	21
Stone Riprap, Class A4	Sq. Yd.	11
Filter Fabric	Sq. Yd.	11
Removal and Disposal of Unsuitable Material for Structures	Cu. Yd.	10
Box Culvert End Sections, Culvert No. 09	Each	1
Box Culvert End Sections, Culvert No. 10	Each	1
Traversable Pipe Grate	Foot	21.7
Rock Fill	Ton	18

DESIGN SPECIFICATIONS

2002 AASHTO Standard Specifications

DESIGN STRESSES

FIELD UNITS

f'c = 3,500 psi
fy = 60,000 psi (Reinforcement)

INDEX OF SHEETS

1. General Plan & Elevation
2. Box Culvert End Section
3. Box Culvert End Section Details
4. Traversable Steel Pipe System
5. Box Culver End Section
6. Box Culvert End Section Details
7. Traversable Steel Pipe System

STATE OF ILLINOIS
ANDREW E. UNDERWAGER
081-006218
CHICAGO, IL
LICENSED STRUCTURAL ENGINEER

Signature: Andrew E Underwager
Date 3-13-2013
License Expires: 11-30-2014

GENERAL PLAN & ELEVATION
ILLINOIS ROUTE 92
F.A.P. RTE 599 - SEC. (83MFT & 103MFT)W
ROCK ISLAND COUNTY
STATION 937+98.45

FILE NAME = W:\Projects\2818\128128 PTB 157\25\cadd\Structural\Dgn\WO #3 IL 92 Culverts\Station937+98.45\Final Submittal 13.8328\937+98.45-64H11-2801-GPE.dgn

WILLS BURKE KELSEY ASSOCIATES LTD.
116 West Main Street, Suite 201
St. Charles, Illinois 60174

USER NAME = hforstl	DESIGNED - AEU	REVISED -	
	CHECKED - DLS	REVISED -	
PLOT SCALE =	DRAWN - AH	REVISED -	
PLOT DATE = 3/20/2013	CHECKED - AEU	REVISED -	

STATE OF ILLINOIS
DEPARTMENT OF TRANSPORTATION

GENERAL PLAN & ELEVATION
STA. 937+98.45
SHEET NO. 1 OF 7 SHEETS

F.A.P. RTE.	SECTION	COUNTY	TOTAL SHEETS	SHEET NO.
599	(83MFT & 103MFT)W	ROCK ISLAND	340	185
		CONTRACT NO. 64H11		
FED. ROAD DIST. NO.	ILLINOIS	FED. AID PROJECT		

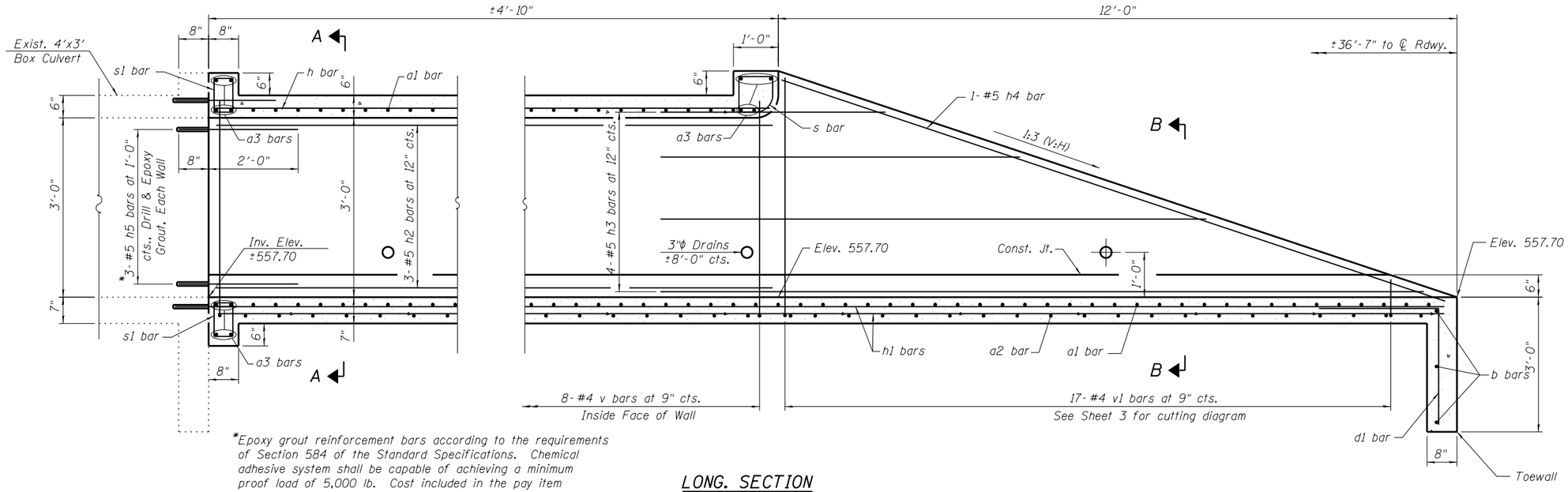

*Epoxy grout reinforcement bars according to the requirements of Section 584 of the Standard Specifications. Chemical adhesive system shall be capable of achieving a minimum proof load of 5,000 lb. Cost included in the pay item Box Culvert End Sections, Culvert No. 09.

LONG. SECTION

Order v1 and h3 bars full length. Cut to fit as shown and use remainder of bars in opposite wall.

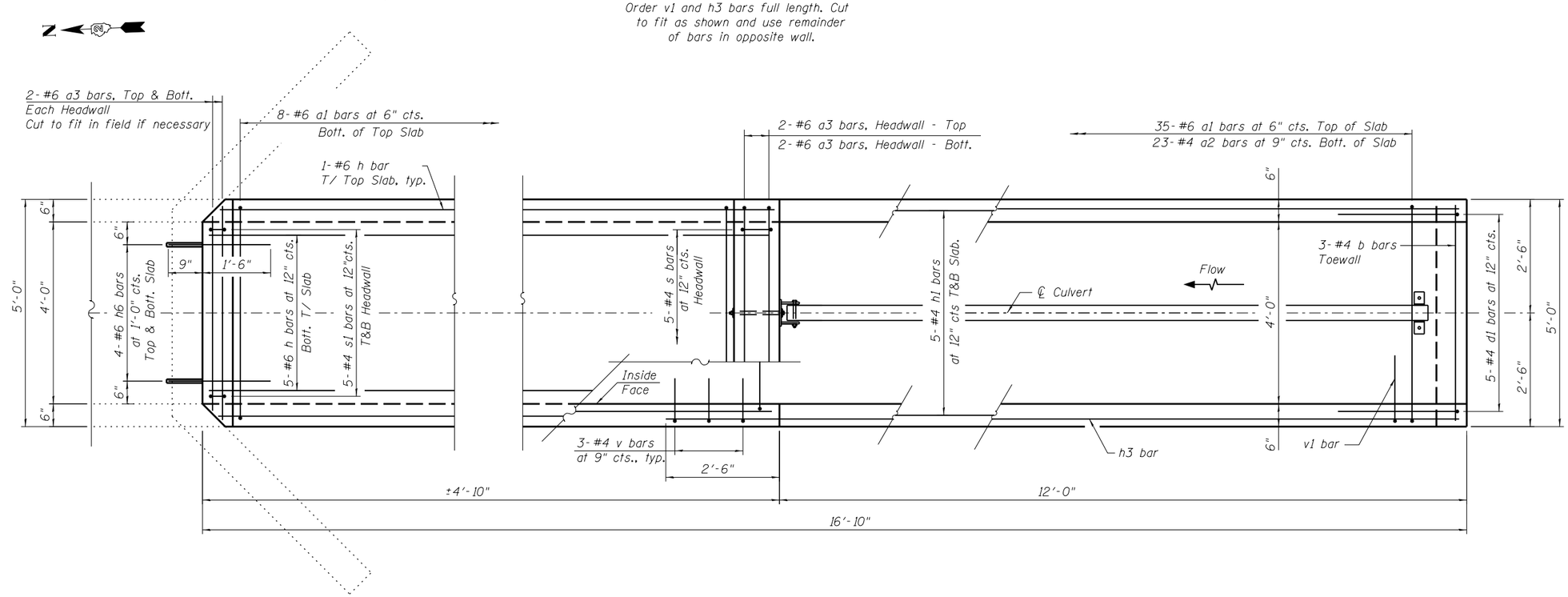

PLAN

FILE NAME = W:\Projects\2010\100120 PTB 157\25\cadd\Structural\Dgn\WO #3 IL 92 Culverts\Station937+98.45\Final Submittal 13\B320\937+98.45-64H11-002-Culvert Ext.Rt..dgn

WILLS BURKE KELSEY ASSOCIATES LTD. 116 West Main Street, Suite 201 St. Charles, Illinois 60174	USER NAME = hferstl	DESIGNED - AEU	REVISED -	STATE OF ILLINOIS DEPARTMENT OF TRANSPORTATION	BOX CULVERT END SECTION STA. 937+98.45 RT.	F.A.P. RTE.	SECTION	COUNTY	TOTAL SHEETS / SHEET NO.
		CHECKED - DLS	REVISED -			599	(83MFT & 103MFT)W	ROCK ISLAND	340 / 186
	PLOT SCALE =	DRAWN - AWH	REVISED -					CONTRACT NO. 64H11	
	PLOT DATE = 3/20/2013	CHECKED - AEU	REVISED -		SHEET NO. 2 OF 7 SHEETS	FED. ROAD DIST. NO.	ILLINOIS	FED. AID PROJECT	

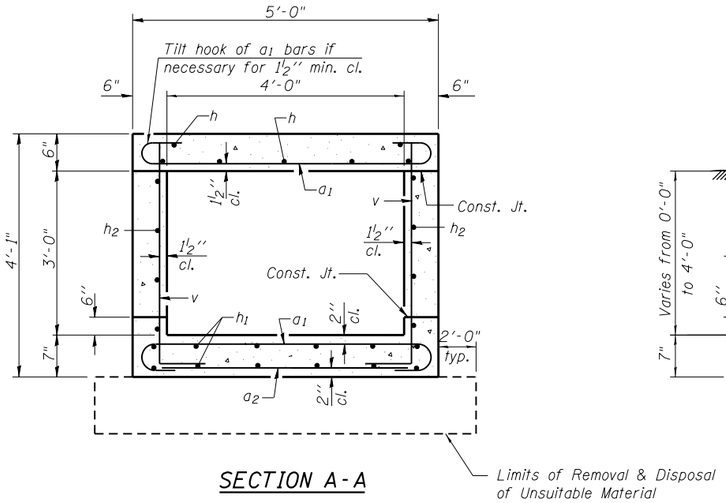

SECTION A-A

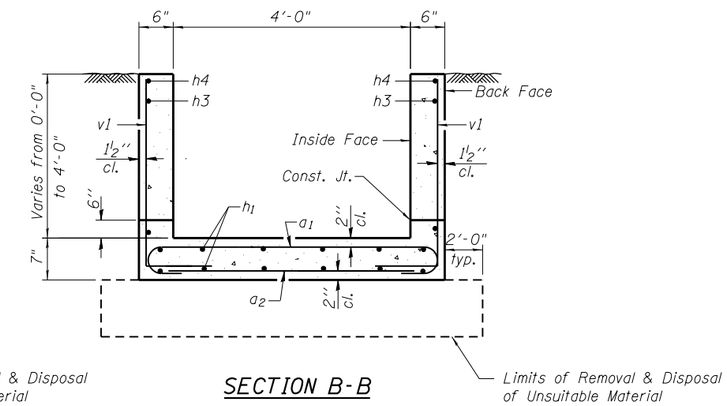

SECTION B-B

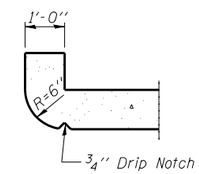

SECTION THRU HEADWALL

BILL OF MATERIAL

(For Information Only)

Bar	No.	Size	Length	Shape
a_1	43	#6	6'-0"	
a_2	23	#4	4'-8"	
a_3	12	#6	4'-8"	
b	3	#4	4'-8"	
d_1	5	#4	5'-4"	
h	7	#6	4'-5"	
h_1	10	#4	16'-6"	
h_2	6	#5	4'-7"	
h_3	4	#5	18'-2"	
h_4	2	#5	12'-4"	
h_5	6	#5	2'-8"	
h_6	8	#6	2'-3"	
s	5	#4	3'-9"	
s_1	10	#4	3'-1"	
v	22	#4	4'-7"	
v_1	17	#4	7'-8"	

DESCRIPTION	UNIT	QTY.
Concrete Box Culverts	Cu. Yd.	4.2
Reinforcement Bars	Pound	1,090

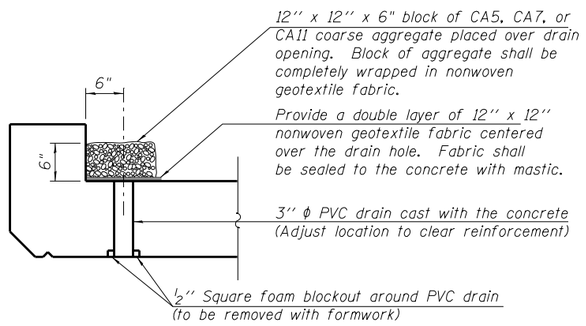

DRAIN DETAIL

(All costs associated with furnishing and constructing the above drain details will not be measured for payment but shall be included in the contract unit price for the end section.)

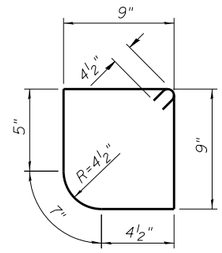

BAR s

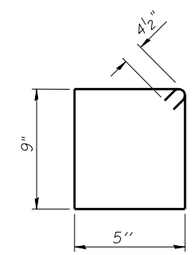

BAR s_1

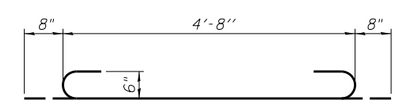

BAR a_1

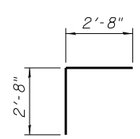

BAR d_1

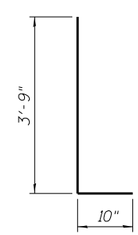

BAR v

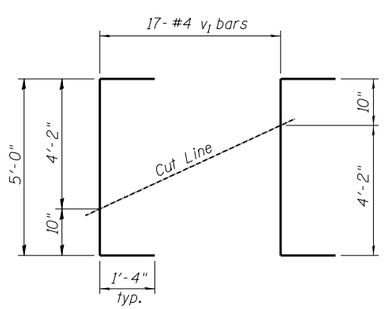

BAR v_1

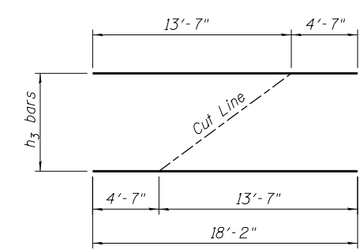

BAR h_3

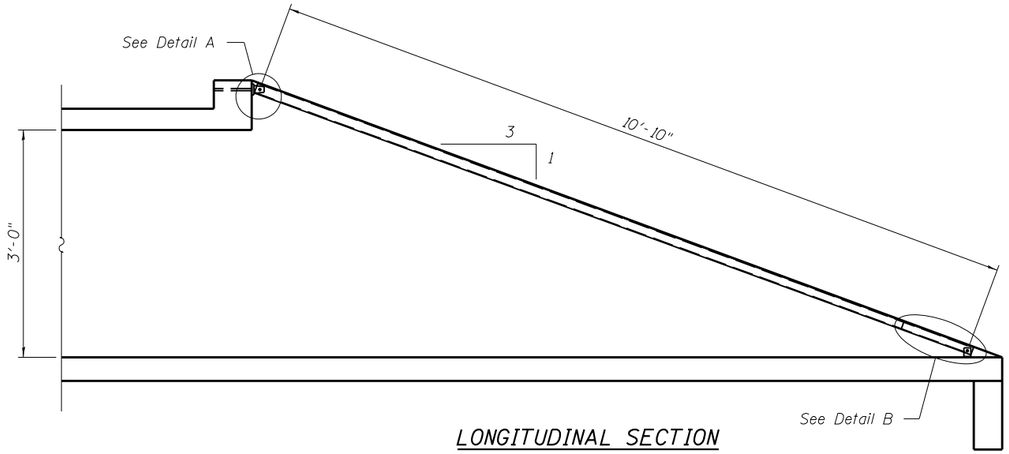

LONGITUDINAL SECTION

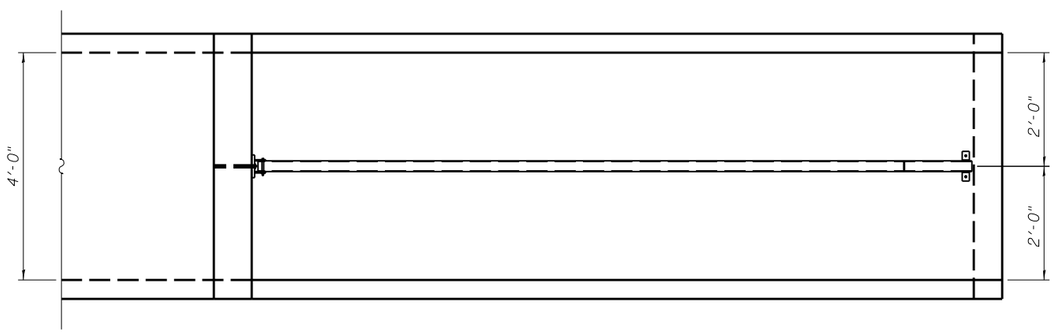

PLAN

GENERAL NOTES

Length shall be determined by the Contractor. All steel pipe shall be standard weight (Sch. 40) unless otherwise noted.

Traversable Steel Pipe System details shown for Box Culvert End Sections. Traversable Steel Pipe System details for other culvert end sections similar.

All components of the Traversable Steel Pipe System shall be galvanized according to the requirements of AASHTO M 111 or M 232 as applicable.

Fabrication of the Traversable Steel Pipe System shall conform to the requirements in Section 505 of the Standard Specifications unless noted otherwise.

Structural steel shapes and plates shall conform to the requirements of Article 1006.04 of the Standard Specifications. Steel pipes shall conform to the requirements of ASTM A 53 (Type E or S), Grade B.

Anchor rods shall conform to the requirements of ASTM F1554, Grade 105. Anchor rods shall be drilled and epoxy grouted according to the requirements of Section 584 of the Standard Specifications. The chemical adhesive system shall be capable of achieving a minimum proof load of 5000 pounds and an ultimate shear capacity of 8000 pounds per anchor.

Bolts and thru bolts shall conform to the requirements of Article 1006.08 of the Standard Specifications except threaded rods conforming to the requirements of ASTM F1554, Grade 105 may be used for the thru bolts.

The minimum edge distance from the center of a hole to the free edge of a structural shape or plate shall be 1 1/2 " unless noted otherwise.

Bolts and anchor rods shall be snug tightened by a few impacts of an impact wrench or the full force of a worker using an ordinary spud wrench unless otherwise noted.

All cost associated with fabricating, furnishing, and installing the Traversable Steel Pipe System will be paid for at the contract unit price per lineal foot for Traversable Pipe Grate.

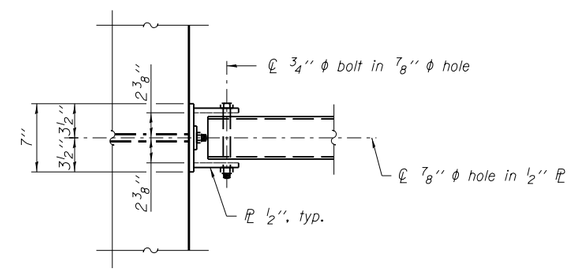

VIEW A-A

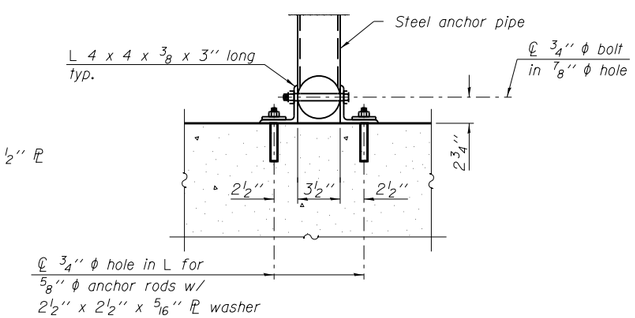

SECTION B-B

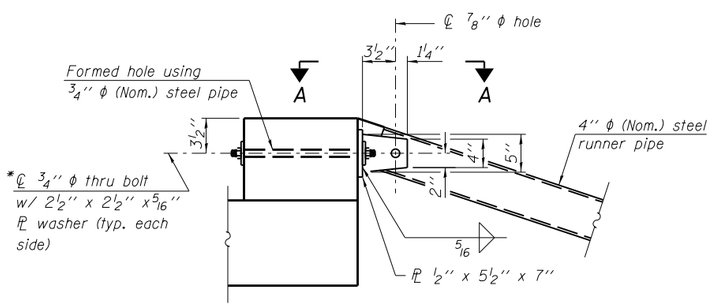

*Bolt shall be tightened per Art. 505.04(f)(2)d of the Standard Specifications

DETAIL A

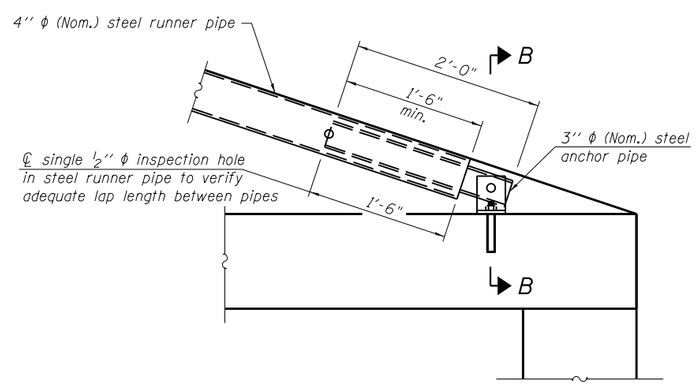

DETAIL B

*** The lap length between pipes may be adjusted in the field to accommodate construction tolerances but shall not be less than 9".

FILE NAME = W:\Projects\2010\100120 PTB 157-25\cadd\Structural\Dgn\WO #3 IL 92 Culverts\Station937+98.45\Final Submittal 13.0320\937+98.45-64H11-004-GratingSystemDtls Rt..dgn

WILLS BURKE KELSEY ASSOCIATES LTD. 116 West Main Street, Suite 201 St. Charles, Illinois 60174	USER NAME = hferstl	DESIGNED - AEU	REVISED -	STATE OF ILLINOIS DEPARTMENT OF TRANSPORTATION	TRAVERSABLE STEEL PIPE SYSTEM STA. 937+98.45 RT.
		CHECKED - DLS	REVISED -		
	PLOT SCALE =	DRAWN - AWH	REVISED -		
	PLOT DATE = 3/20/2013	CHECKED - AEU	REVISED -		SHEET NO. 4 OF 7 SHEETS

F.A.P. RTE.	SECTION	COUNTY	TOTAL SHEETS	SHEET NO.
599	(83MFT & 103MFT)W	ROCK ISLAND	340	188
		CONTRACT NO. 64H11		
FED. ROAD DIST. NO.	ILLINOIS	FED. AID PROJECT		

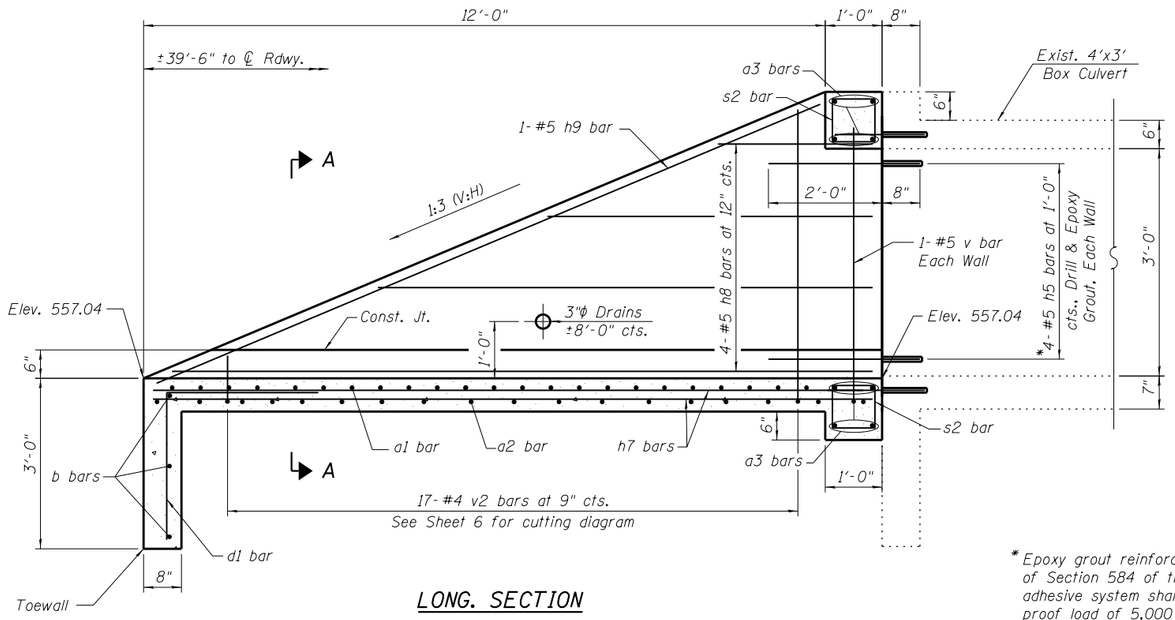

LONG. SECTION

Order v2 and h8 bars full length. Cut to fit as shown and use remainder of bars in opposite wall.

*Epoxy grout reinforcement bars according to the requirements of Section 584 of the Standard Specifications. Chemical adhesive system shall be capable of achieving a minimum proof load of 5,000 lb. Cost included in the pay item Box Culvert End Sections, Culvert No. 10.

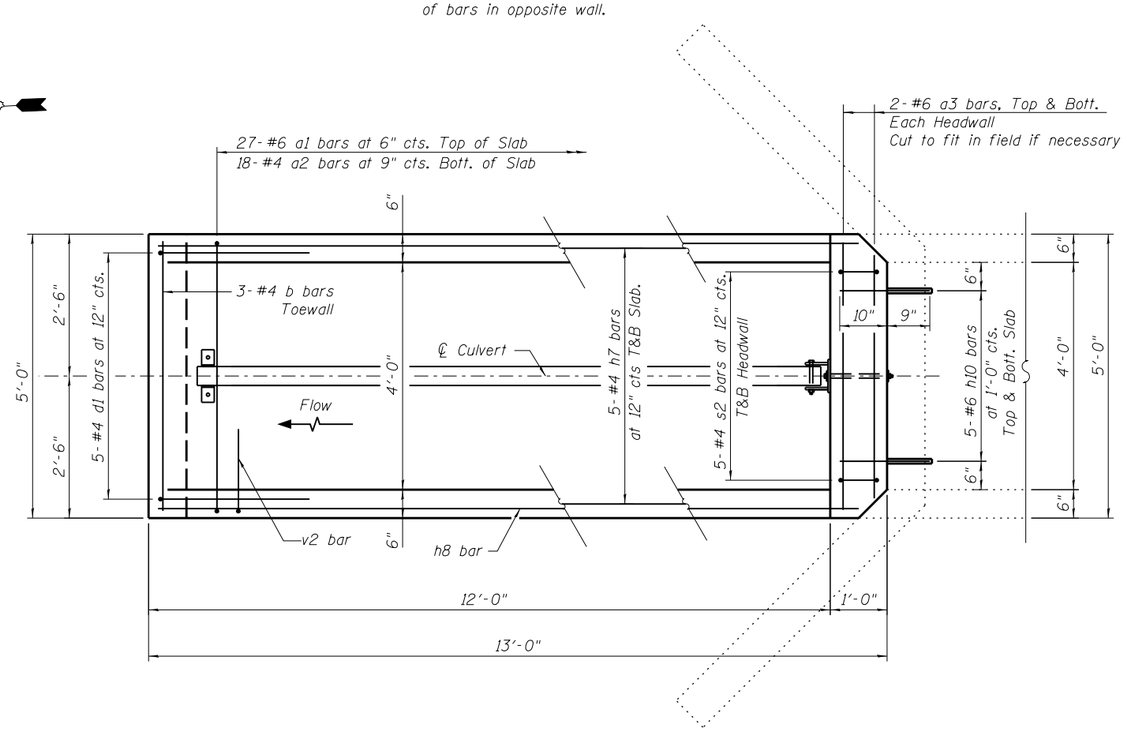

PLAN

FILE NAME = W:\Projects\2010\100120 PTB 157\25\cadd\Structural\Dgn\WO #3 IL 92 Culverts\Station937+98.45\Final Submittal 13\B320\937+98.45-64H11-005-Culvert Ext.L.t.dgn

WILLS BURKE KELSEY ASSOCIATES LTD. 116 West Main Street, Suite 201 St. Charles, Illinois 60174	USER NAME = hferstl	DESIGNED - AEU	REVISED -	STATE OF ILLINOIS DEPARTMENT OF TRANSPORTATION	BOX CULVERT END SECTION STA. 937+98.45 LT.	F.A.P. RTE.	SECTION	COUNTY	TOTAL SHEETS	SHEET NO.
		CHECKED - DLS	REVISED -			599	(83MFT & 103MFT)W	ROCK ISLAND	340	189
	PLOT SCALE =	DRAWN - AWH	REVISED -					CONTRACT NO. 64H11		
	PLOT DATE = 3/20/2013	CHECKED - AEU	REVISED -		SHEET NO. 5 OF 7 SHEETS	FED. ROAD DIST. NO.	ILLINOIS	FED. AID PROJECT		

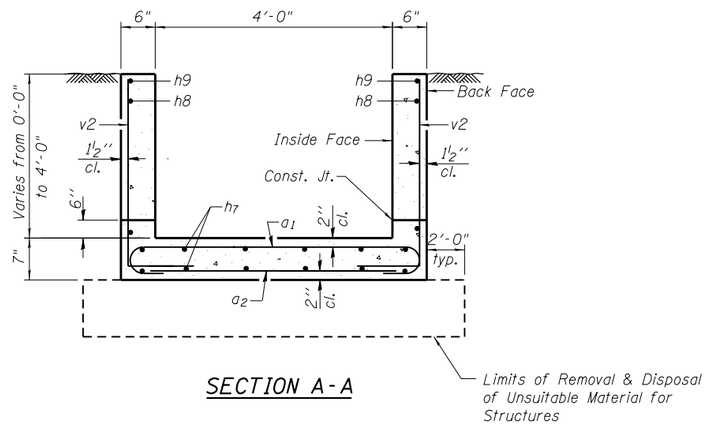

SECTION A-A

BILL OF MATERIAL

(For Information Only)

Bar	No.	Size	Length	Shape
a_1	27	#6	6'-0"	
a_2	18	#4	4'-8"	
a_3	8	#6	4'-8"	
b	3	#4	4'-8"	
d_1	5	#4	5'-4"	
h_7	10	#4	12'-6"	
h_8	4	#5	14'-5"	
h_9	2	#5	12'-8"	
h_5	8	#5	2'-8"	
h_{10}	10	#6	1'-7"	
s_2	10	#4	3'-9"	
v	2	#4	4'-7"	
v_2	17	#4	7'-8"	
DESCRIPTION			UNIT	QTY.
Concrete Box Culverts			Cu. Yd.	3.0
Reinforcement Bars			Pound	720

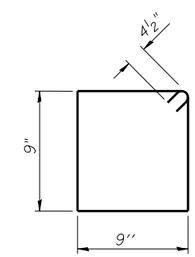

BAR s_2

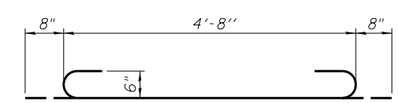

BAR a_1

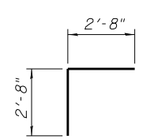

BAR d_1

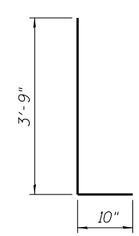

BAR v

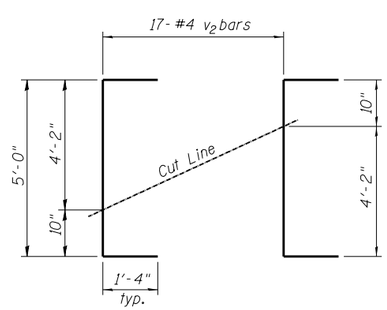

BAR v_2

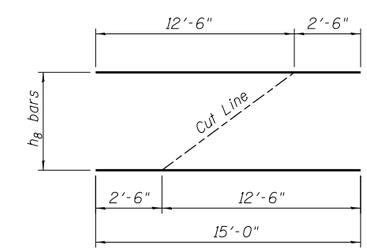

BAR h_8

FILE NAME = W:\Projects\2010\100120 PTB 157\25\cadd\Structural\Dgn\WO #3 IL 92 Culverts\Station937+98.45\Final Submittal 13\B220\937+98.45-64H11-006-Culv.Extension Details L.dgn

WILLS BURKE KELSEY ASSOCIATES LTD.
116 West Main Street, Suite 201
St. Charles, Illinois 60174

USER NAME = hferstl	DESIGNED - AEU	REVISED -	
	CHECKED - DLS	REVISED -	
PLOT SCALE =	DRAWN - AH	REVISED -	
PLOT DATE = 3/20/2013	CHECKED - AEU	REVISED -	

STATE OF ILLINOIS
DEPARTMENT OF TRANSPORTATION

BOX CULVERT END SECTION DETAILS
STA. 937+98.45 LT.

SHEET NO. 6 OF 7 SHEETS

F.A.P. RTE.	SECTION	COUNTY	TOTAL SHEETS	SHEET NO.
599	(83MFT & 103MFT)W	ROCK ISLAND	340	190
		CONTRACT NO. 64H11		
FED. ROAD DIST. NO.	ILLINOIS	FED. AID PROJECT		

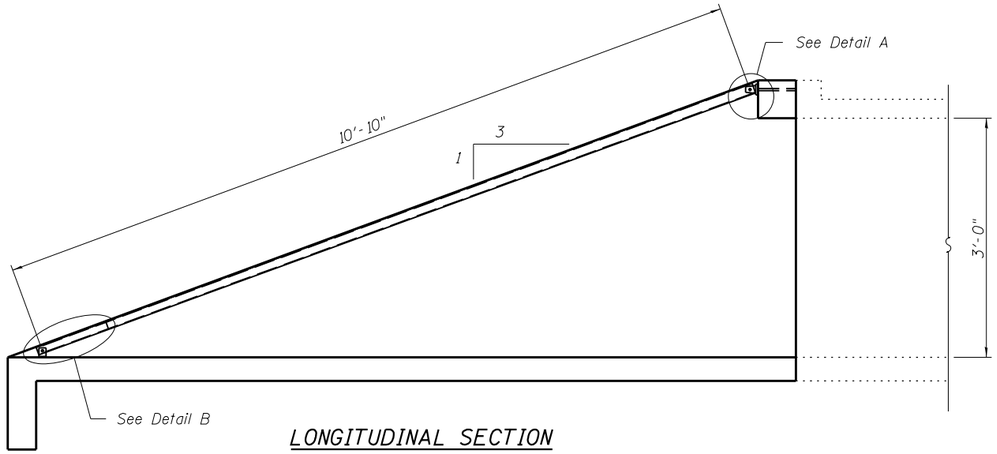

LONGITUDINAL SECTION

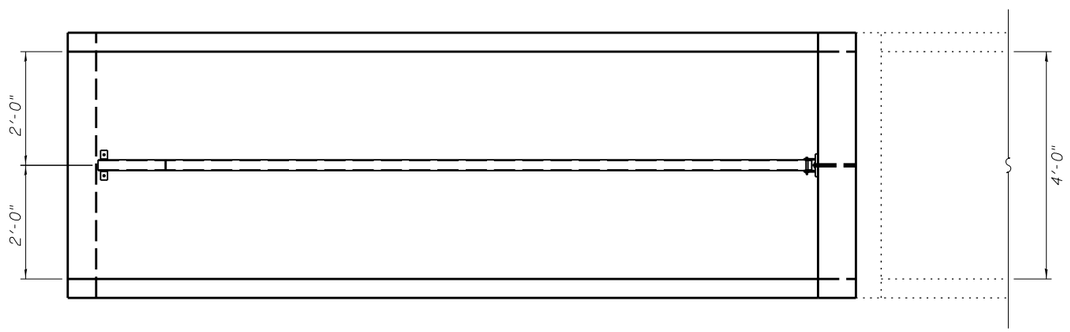

PLAN

GENERAL NOTES

Length shall be determined by the Contractor. All steel pipe shall be standard weight (Sch. 40) unless otherwise noted.

Traversable Steel Pipe System details shown for Box Culvert End Sections. Traversable Steel Pipe System details for other culvert end sections similar.

All components of the Traversable Steel Pipe System shall be galvanized according to the requirements of AASHTO M 111 or M 232 as applicable.

Fabrication of the Traversable Steel Pipe System shall conform to the requirements in Section 505 of the Standard Specifications unless noted otherwise.

Structural steel shapes and plates shall conform to the requirements of Article 1006.04 of the Standard Specifications. Steel pipes shall conform to the requirements of ASTM A 53 (Type E or S), Grade B.

Anchor rods shall conform to the requirements of ASTM F1554, Grade 105. Anchor rods shall be drilled and epoxy grouted according to the requirements of Section 584 of the Standard Specifications. The chemical adhesive system shall be capable of achieving a minimum proof load of 5000 pounds and an ultimate shear capacity of 8000 pounds per anchor.

Bolts and thru bolts shall conform to the requirements of Article 1006.08 of the Standard Specifications except threaded rods conforming to the requirements of ASTM F1554, Grade 105 may be used for the thru bolts.

The minimum edge distance from the center of a hole to the free edge of a structural shape or plate shall be 1 1/2 " unless noted otherwise.

Bolts and anchor rods shall be snug tightened by a few impacts of an impact wrench or the full force of a worker using an ordinary spud wrench unless otherwise noted.

All cost associated with fabricating, furnishing, and installing the Traversable Steel Pipe System will be paid for at the contract unit price per lineal foot for Traversable Pipe Grate.

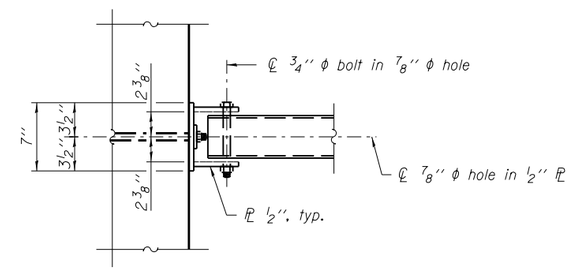

VIEW A-A

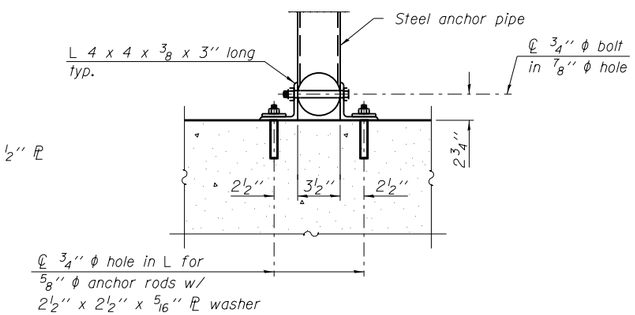

SECTION B-B

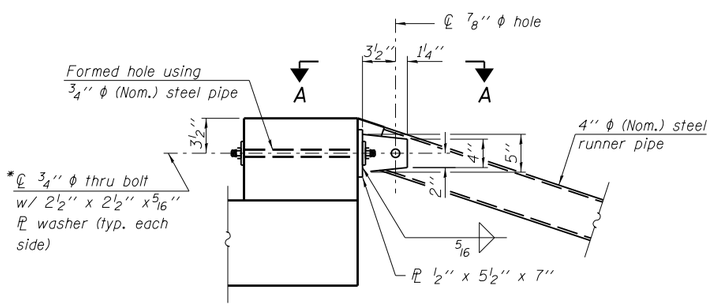

*Bolt shall be tightened per Art. 505.04(f)(2)d of the Standard Specifications

DETAIL A

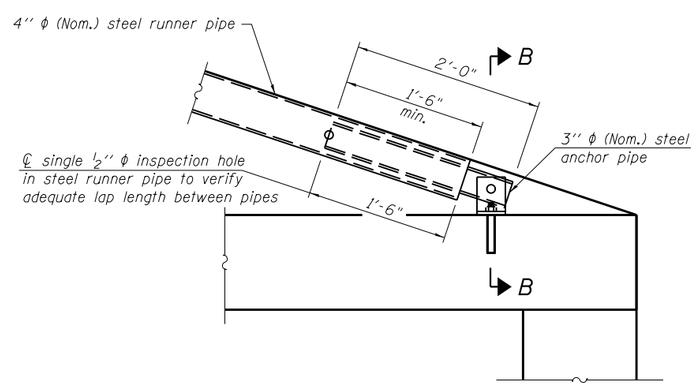

DETAIL B

*** The lap length between pipes may be adjusted in the field to accommodate construction tolerances but shall not be less than 9".

FILE NAME = W:\Projects\2010\100120 PTB 157-25\cadd\Structural\Dgn\WO #3 IL 92 Culverts\Station937+98.45\Final Submittal 13.0320\937+98.45-64H11-007-GratingSystemDtls L1.dgn

WILLS BURKE KELSEY ASSOCIATES LTD. 116 West Main Street, Suite 201 St. Charles, Illinois 60174	USER NAME = hferstl	DESIGNED - AEU	REVISED -	STATE OF ILLINOIS DEPARTMENT OF TRANSPORTATION	TRAVERSABLE STEEL PIPE SYSTEM STA. 937+98.45 LT.
		CHECKED - DLS	REVISED -		
	PLOT SCALE =	DRAWN - AWH	REVISED -		
	PLOT DATE = 3/20/2013	CHECKED - AEU	REVISED -		SHEET NO. 7 OF 7 SHEETS

F.A.P. RTE.	SECTION	COUNTY	TOTAL SHEETS	SHEET NO.
599	(83MFT & 103MFT)W	ROCK ISLAND	340	191
		CONTRACT NO. 64H11		
FED. ROAD DIST. NO.	ILLINOIS	FED. AID PROJECT		

Existing Structure:
Single 4'x 4' box culvert built in 1940 under Section 66B-15d. The existing box will be extended to the south and a grated drop box constructed. The existing box will be extended to the north and a grated end section constructed. One lane of traffic to be maintained at all times utilizing staged construction.

No salvage.

INDEX OF SHEETS

1. General Plan & Elevation
2. Box Culvert End Section with Drop Box
3. Box Culvert End Section with Drop Box Details
4. Traversable Steel Pipe System with Drop Box
5. Box Culvert End Section
6. Box Culvert End Section Details
7. Traversable Steel Pipe System

GENERAL NOTES

1. The barrel slab and walls shall be poured monolithically with the drop box.
2. All exposed concrete edges shall be chamfered $\frac{3}{4}$" unless otherwise noted.
3. All construction joints shall be bonded.
4. The contract unit price "Each" for Box Culvert End Sections of the culvert End Section specified shall include the Concrete Box Culverts, Reinforcement Bars, Earth Excavation where required and necessary grading to fit the structures as shown, or to the slope.
5. Plan dimensions and details relative to existing plans are subject to nominal construction variations. The Contractor shall field verify existing dimensions and details affecting new construction and make necessary approved adjustments prior to construction or ordering of materials. Such variatioins shall not be cause for additional compensatiion for a change in scoope of the work, however, the Contractor will be paid for the quantity actually furnished at the unit price bid for the work.
6. This work shall be done according to the applicable portion of of 501, 503, 505, 508, 540 and 584 of the Standard Specifications.
7. Drainage holes shall conform to the requirements of Article 503.11 of the Standard Specifications.
8. A precast option will not be allowed at this site.
9. Nonwoven geotextile fabric shall conform to the requirements of Art. 1080.01 of the Standard Specifications. The minimum weight of the fabric shall be 6 ounces per square yard.

DESIGN SPECIFICATIONS

2002 AASHTO Standard Specifications

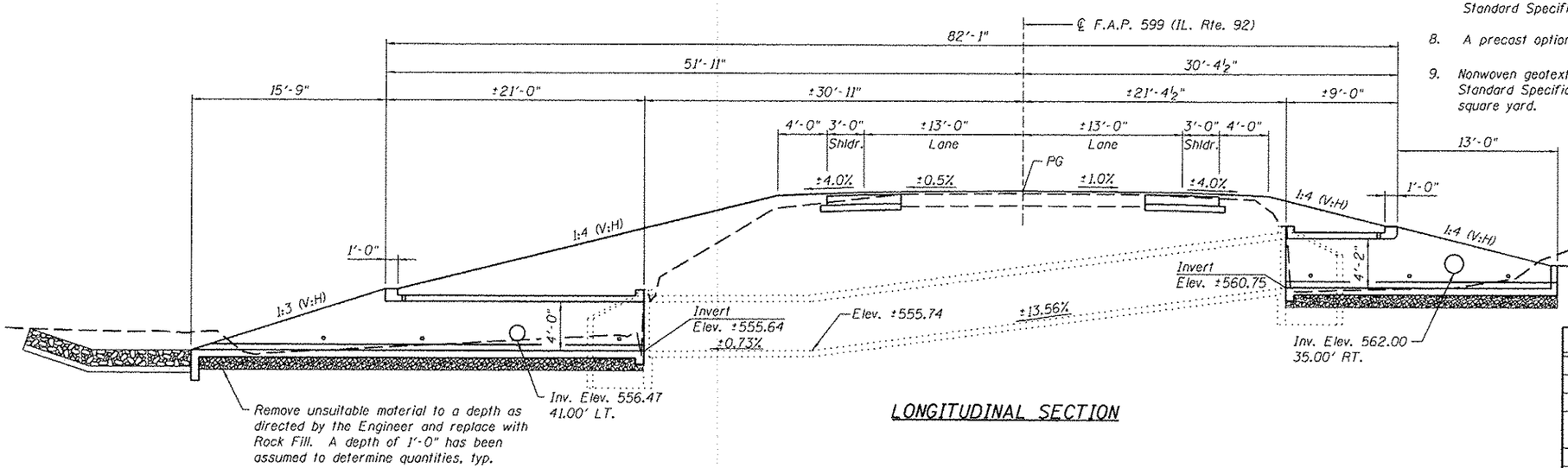

LONGITUDINAL SECTION

TOTAL BILL OF MATERIAL

ITEM	UNIT	TOTAL
Turf Reinforcement Mat	Sq. Yd.	40
Stone Riprap, Class A4	Sq. Yd.	25
Filter Fabric	Sq. Yd.	25
Removal and Disposal of Unsuitable Material for Structures	Cu. Yd.	20
Box Culvert End Sections, Culvert No. 11	Each	1
Box Culvert End Sections, Culvert No. 12	Each	1
Traversable Pipe Grate	Foot	25.8
Rock Fill	Ton	35

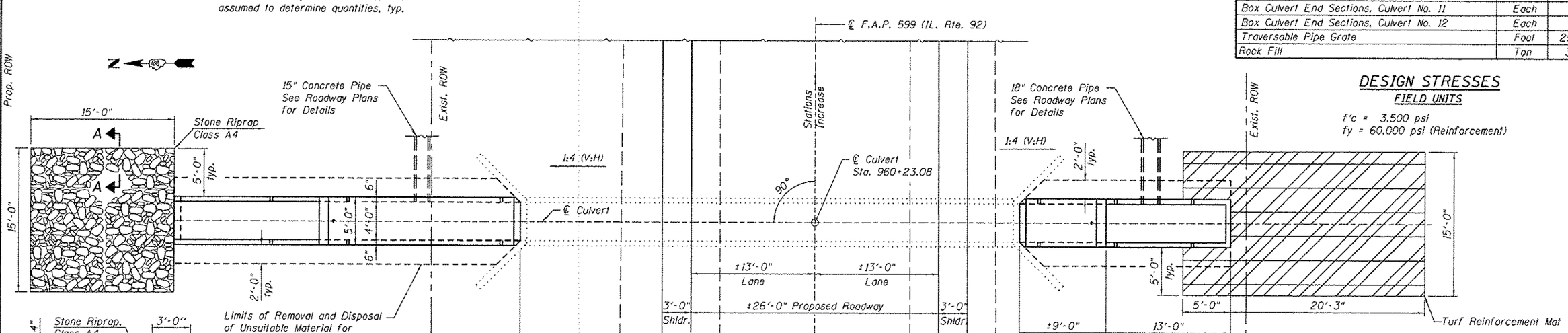

PLAN

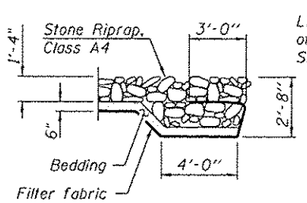

SECTION A-A

DESIGN STRESSES

FIELD UNITS

f'c = 3,500 psi
fy = 60,000 psi (Reinforcement)

STATE OF ILLINOIS
ANDREW E. UNDERWAGER
081-006218
CHICAGO, IL
LICENSED STRUCTURAL ENGINEER

Signature: Andrew E. Underwager
Date 3-13-2013
License Expires: 11-30-2014

GENERAL PLAN & ELEVATION
ILLINOIS ROUTE 92
F.A.P. RTE 599 - SEC. (83MFT & 103MFT)W
ROCK ISLAND COUNTY
STATION 960+23.08

FILE NAME = W:\Projects\2818\128128 PTB 151\25\cadd\Structural\Dgn\WD 13 IL 92 Culverts\Station960-23.08\Final Submittal 13\2328\960-23.08-64H11-081-002.dgn

WILLS BURKE KELSEY ASSOCIATES LTD.
116 West Main Street, Suite 201
St. Charles, Illinois 60174

USER NAME = hforst	DESIGNED - AEU	REVISED -	
	CHECKED - DLS	REVISED -	
PLOT SCALE =	DRAWN - AH	REVISED -	
PLOT DATE = 3/28/2013	CHECKED - AEU	REVISED -	

STATE OF ILLINOIS
DEPARTMENT OF TRANSPORTATION

GENERAL PLAN & ELEVATION
STA. 960+23.08
SHEET NO. 1 OF 7 SHEETS

F.A.P. RTE.	SECTION	COUNTY	TOTAL SHEETS	SHEET NO.
599	(83MFT & 103MFT)W	ROCK ISLAND	340	192
		CONTRACT NO. 64H11		
FED. ROAD DIST. NO.	ILLINOIS	FED. AID PROJECT		

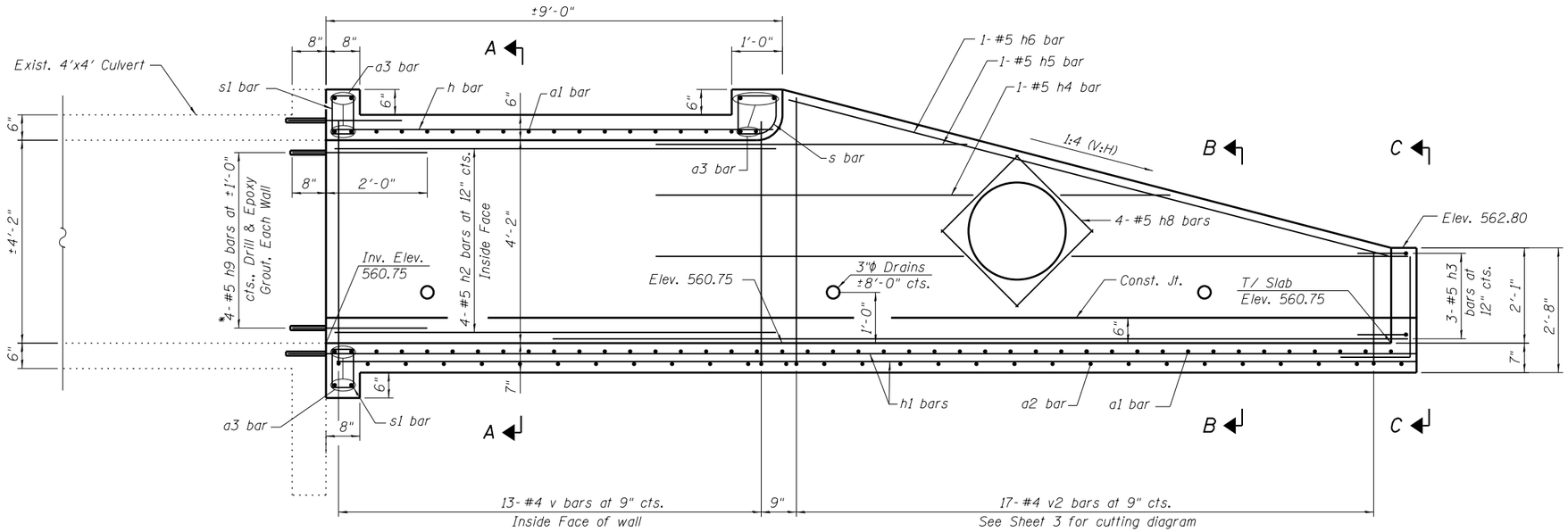

*Epoxy grout reinforcement bars according to the requirements of Section 584 of the Standard Specifications. Chemical adhesive system shall be capable of achieving a minimum proof load of 5,000 lb. Cost included in the pay item Box Culvert End Sections, Culvert No. 11.

LONG. SECTION

Order v2 bars full length. Cut to fit as shown and use remainder of bars in opposite wall.

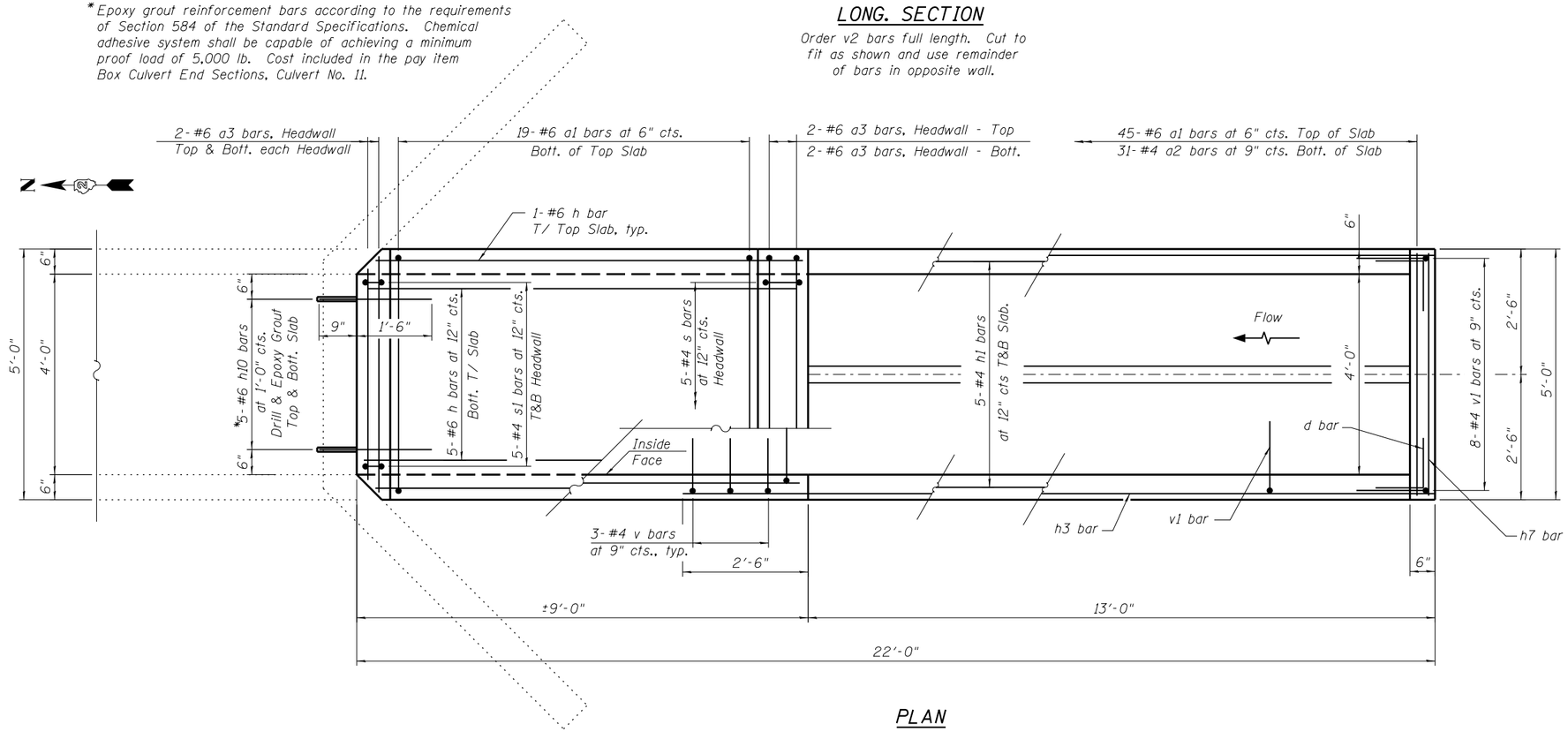

PLAN

FILE NAME = W:\Projects\2010\10120 PTB 157\25\cadd\Structural\Dgn\WD *3 IL 92 Culverts\Station960+23.08\Final Submittal 13\0320\960+23.08-64H11-002-Drop Box.dgn

WILLS BURKE KELSEY ASSOCIATES LTD. 116 West Main Street, Suite 201 St. Charles, Illinois 60174	USER NAME = hferstl	DESIGNED - AEU	REVISED -	STATE OF ILLINOIS DEPARTMENT OF TRANSPORTATION	BOX CULVERT END SECTION WITH DROP BOX STA. 960+23.08 RT.	F.A.P. RTE. 599	SECTION (83MFT & 103MFT)W	COUNTY ROCK ISLAND	TOTAL SHEETS 340	SHEET NO. 193
		CHECKED - DLS	REVISED -					CONTRACT NO. 64H11		
	PLOT SCALE =	DRAWN - AH	REVISED -							
	PLOT DATE = 3/20/2013	CHECKED - AEU	REVISED -		SHEET NO. 2 OF 7 SHEETS	FED. ROAD DIST. NO.	ILLINOIS	FED. AID PROJECT		

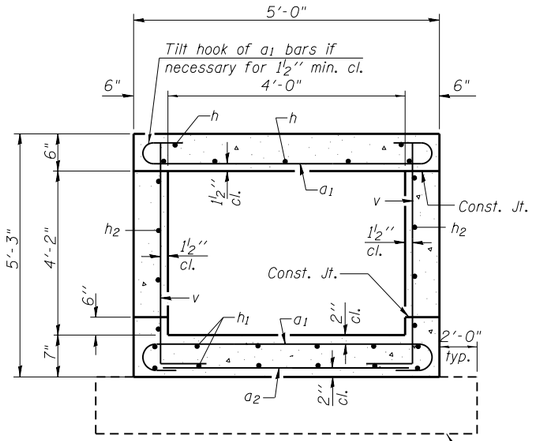

SECTION A-A

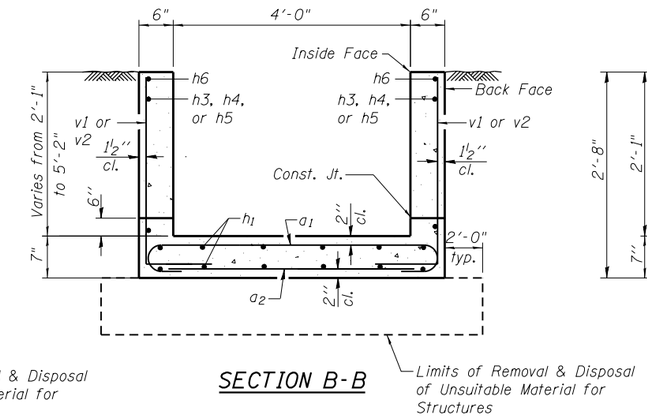

SECTION B-B

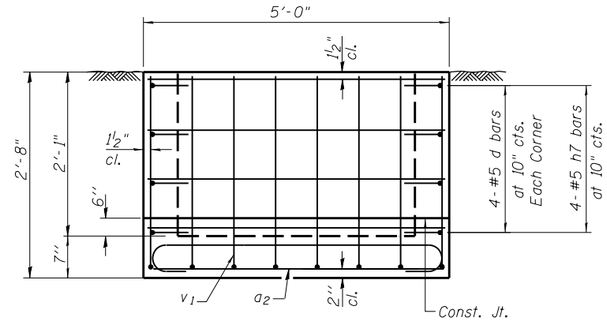

VIEW C-C

BILL OF MATERIAL

(For Information Only)

Bar	No.	Size	Length	Shape
a_1	64	#6	6'-0"	
a_2	31	#4	4'-8"	
a_3	12	#6	4'-8"	
d	8	#5	2'-0"	
h	7	#6	8'-9"	
h_1	10	#4	21'-8"	
h_2	8	#5	8'-8"	
h_3	6	#5	15'-4"	
h_4	2	#5	10'-5"	
h_5	2	#5	6'-5"	
h_6	2	#5	12'-7"	
h_7	4	#5	4'-8"	
h_8	4	#5	2'-2"	
h_9	8	#5	2'-8"	
h_{10}	10	#6	2'-3"	
s	5	#4	3'-9"	
s_1	10	#4	3'-1"	
v	32	#4	5'-7"	
v_1	8	#4	3'-8"	
v_2	17	#4	10'-6"	
DESCRIPTION			UNIT	QTY.
Concrete Box Culverts			Cu. Yd.	5.5
Reinforcement Bars			Pound	1,620

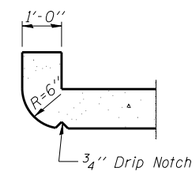

SECTION THRU HEADWALL

(Up Stream End Only)

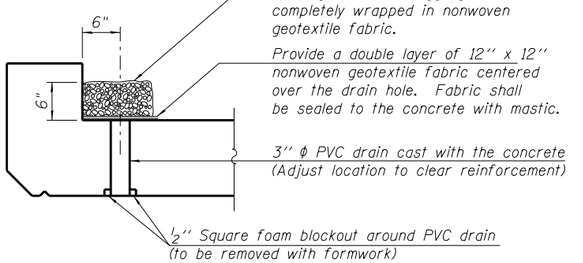

DRAIN DETAIL

(All costs associated with furnishing and constructing the above drain details will not be measured for payment but shall be included in the contract unit price for the end section.)

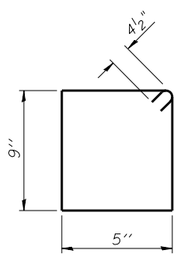

BAR s_1

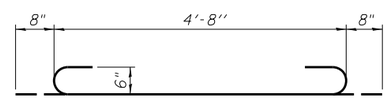

BAR a_1

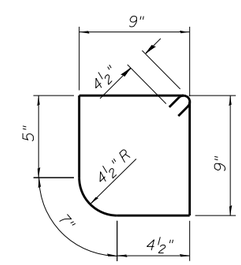

BAR s

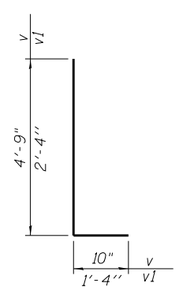

BARS v & v1

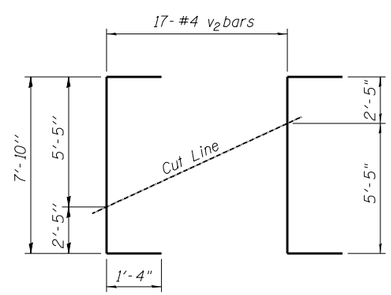

BAR v2 FIELD CUTTING DIAGRAM

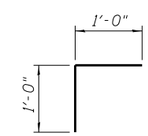

BAR d

FILE NAME = W:\Projects\2010\120120 PTB 157\25\cadd\Structural\Dgn\WD #3 IL 92 Culverts\Station960-23.08\Final Submittal 13\0320\960-23.08-64H11-003-Drop Box Details.dgn

WILLS BURKE KELSEY ASSOCIATES LTD.
116 West Main Street, Suite 201
St. Charles, Illinois 60174

USER NAME = hferstl	DESIGNED - AEU	REVISED -	
	CHECKED - DLS	REVISED -	
PLOT SCALE =	DRAWN - AH	REVISED -	
PLOT DATE = 3/20/2013	CHECKED - AEU	REVISED -	

STATE OF ILLINOIS
DEPARTMENT OF TRANSPORTATION

BOX CULVERT END SECTION WITH DROP BOX DETAILS
STA. 960+23.08 RT.

SHEET NO. 3 OF 7 SHEETS

F.A.P. RTE.	SECTION	COUNTY	TOTAL SHEETS	SHEET NO.
599	(83MFT & 103MFT)W	ROCK ISLAND	340	194
		CONTRACT NO. 64H11		
FED. ROAD DIST. NO.	ILLINOIS	FED. AID PROJECT		

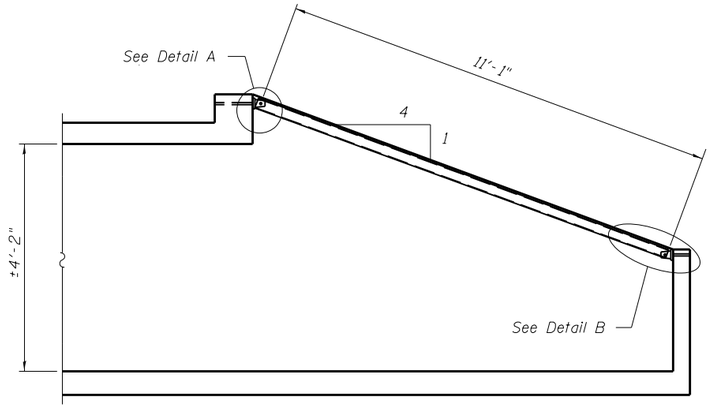

LONGITUDINAL SECTION

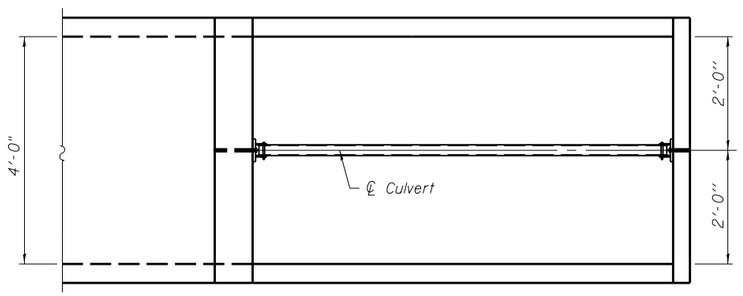

PLAN

GENERAL NOTES

Length shall be determined by the Contractor. All steel pipe shall be standard weight (Sch. 40) unless otherwise noted.

Traversable Steel Pipe System details shown for Box Culvert End Sections. Traversable Steel Pipe System details for other culvert end sections similar.

All components of the Traversable Steel Pipe System shall be galvanized according to the requirements of AASHTO M 111 or M 232 as applicable.

Fabrication of the Traversable Steel Pipe System shall conform to the requirements in Section 505 of the Standard Specifications unless noted otherwise.

Structural steel shapes and plates shall conform to the requirements of Article 1006.04 of the Standard Specifications. Steel pipes shall conform to the requirements of ASTM A 53 (Type E or S), Grade B.

Anchor rods shall conform to the requirements of ASTM F1554, Grade 105. Anchor rods shall be drilled and epoxy grouted according to the requirements of Section 584 of the Standard Specifications. The chemical adhesive system shall be capable of achieving a minimum proof load of 5000 pounds and an ultimate shear capacity of 8000 pounds per anchor.

Bolts and thru bolts shall conform to the requirements of Article 1006.08 of the Standard Specifications except threaded rods conforming to the requirements of ASTM F1554, Grade 105 may be used for the thru bolts.

The minimum edge distance from the center of a hole to the free edge of a structural shape or plate shall be $1\frac{1}{2}''$ unless noted otherwise.

Bolts and anchor rods shall be snug tightened by a few impacts of an impact wrench or the full force of a worker using an ordinary spud wrench, unless noted otherwise.

All cost associated with fabricating, furnishing, and installing the Traversable Steel Pipe System will be paid for at the contract unit price per lineal foot for Traversable Pipe Grate.

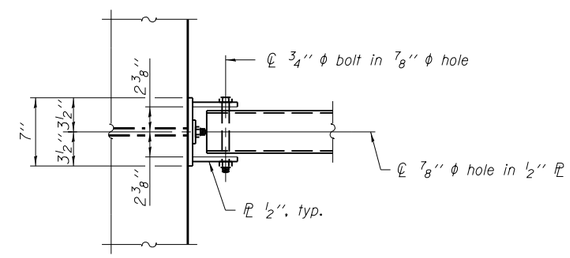

VIEW A-A

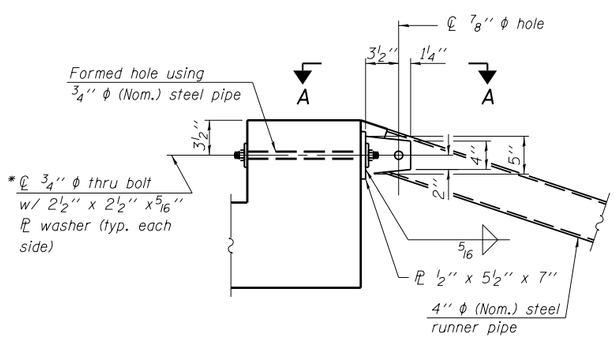

DETAIL A

* Bolt shall be tightened per Art. 505.04(f)(2)d of the Standard Specifications.

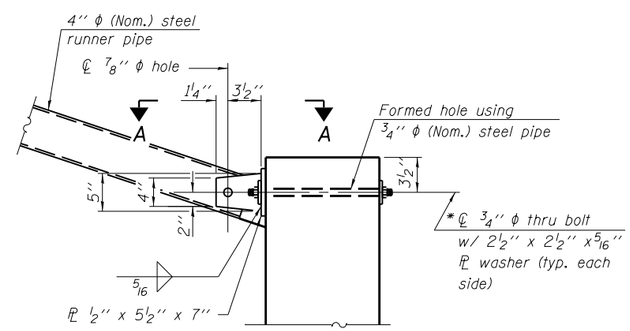

DETAIL B

FILE NAME = W:\Projects\2010\100120 PTB 157\25\cadd\Structural\Dgn\WO #3 IL 92 Culverts\Station960+23.08-Final Submittal 130220\960+23.08-64H11-004-DropBoxGratingSgn.dgn

WILLS BURKE KELSEY ASSOCIATES LTD. 116 West Main Street, Suite 201 St. Charles, Illinois 60174	USER NAME = hferstl	DESIGNED - AEU	REVISED -	STATE OF ILLINOIS DEPARTMENT OF TRANSPORTATION	TRAVERSABLE STEEL PIPE SYSTEM WITH DROP BOX STA. 960+23.08 RT.	F.A.P. RTE.	SECTION	COUNTY	TOTAL SHEETS	SHEET NO.
		CHECKED - DLS	REVISED -			599	(83MFT & 103MFT)W	ROCK ISLAND	340	195
	PLOT SCALE =	DRAWN - AWH	REVISED -					CONTRACT NO. 64H11		
	PLOT DATE = 3/20/2013	CHECKED - AEU	REVISED -		SHEET NO. 4 OF 7 SHEETS	FED. ROAD DIST. NO.	ILLINOIS	FED. AID PROJECT		

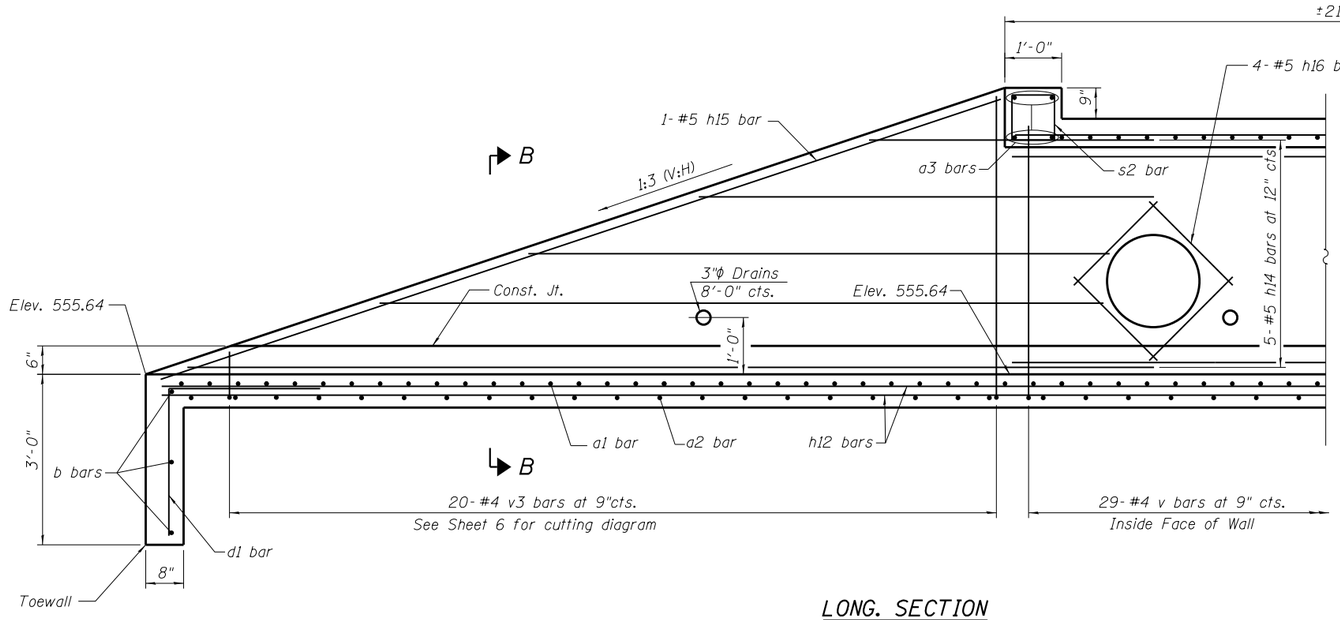

LONG. SECTION

Order v3 and h14 bars full length. Cut to fit as shown and use remainder of bars in opposite wall.

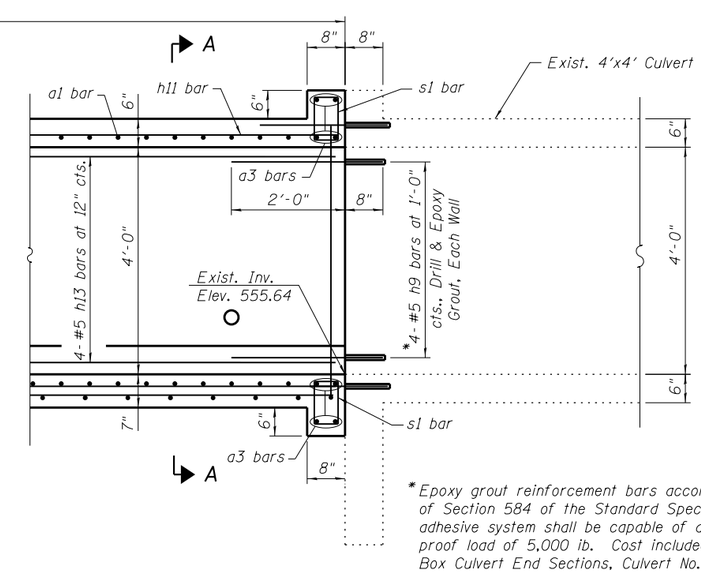

*Epoxy grout reinforcement bars according to the requirements of Section 584 of the Standard Specifications. Chemical adhesive system shall be capable of achieving a minimum proof load of 5,000 lb. Cost included in the pay item Box Culvert End Sections, Culvert No. 12.

MIN. BAR LAP

#4 bar = 1'-8"

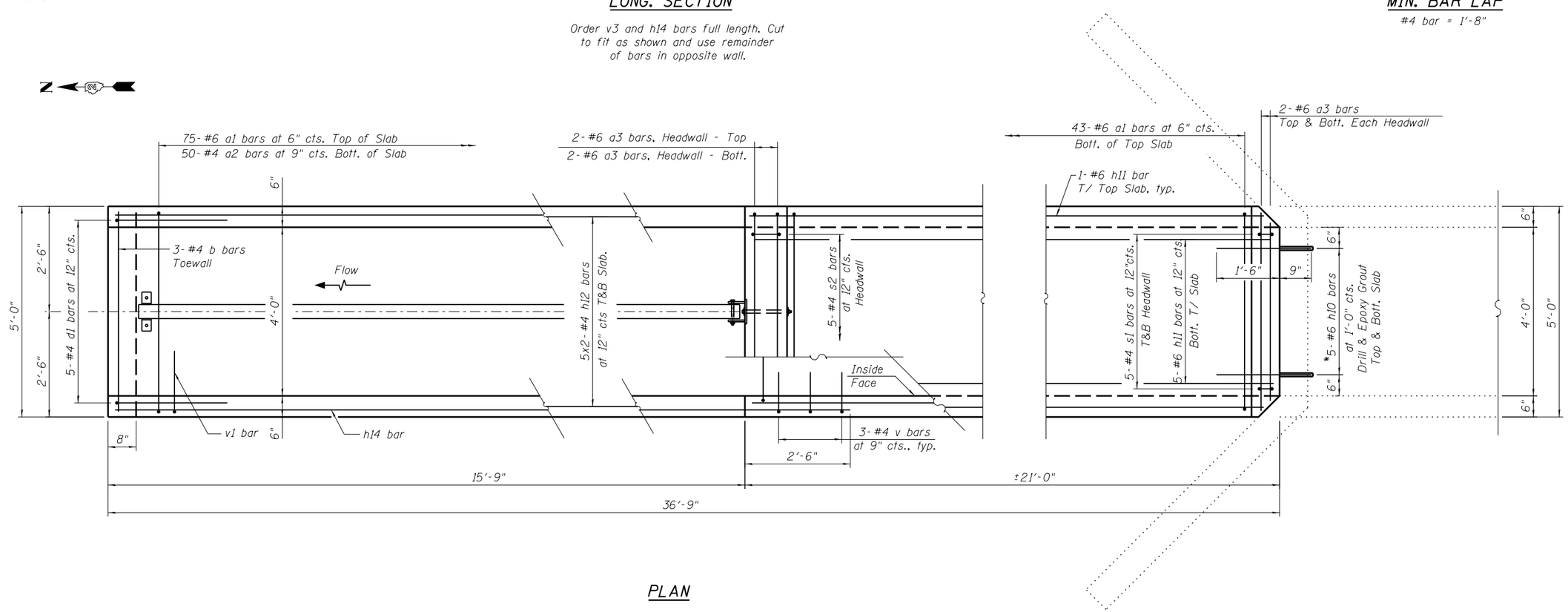

PLAN

WILLS BURKE KELSEY ASSOCIATES LTD. 116 West Main Street, Suite 201 St. Charles, Illinois 60174	USER NAME = hferstl	DESIGNED - AEU	REVISED -
		CHECKED - DLS	REVISED -
	PLOT SCALE =	DRAWN - AH	REVISED -
	PLOT DATE = 3/20/2013	CHECKED - AEU	REVISED -

STATE OF ILLINOIS
DEPARTMENT OF TRANSPORTATION

BOX CULVERT END SECTION
STA. 960+23.08 LT.

SHEET NO. 5 OF 7 SHEETS

F.A.P. RTE.	SECTION	COUNTY	TOTAL SHEETS	SHEET NO.
599	(83MFT & 103MFT)W	ROCK ISLAND	340	196
		CONTRACT NO. 64H11		
FED. ROAD DIST. NO.	ILLINOIS	FED. AID PROJECT		

FILE NAME = W:\Projects\2010\100120 PTB 157\25\cadd\Structural\Dgn\WO #3 IL 92 Culverts\Station960+23.08-Final Submittal 130220\960+23.08-64H11-005-Culvert Ext.dgn

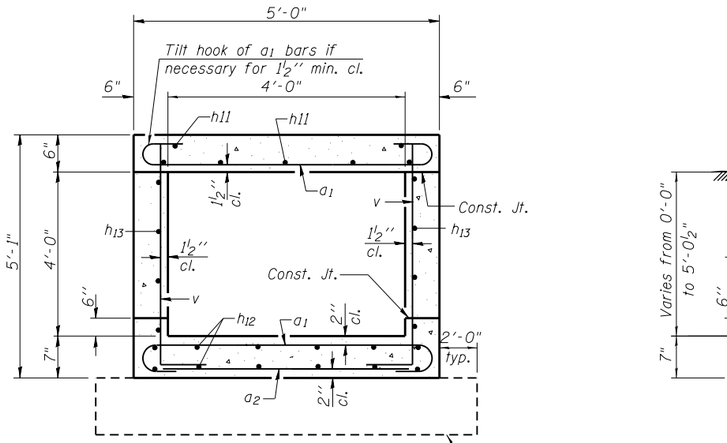

SECTION A-A

Limits of Removal & Disposal of Unsuitable Material for Structures

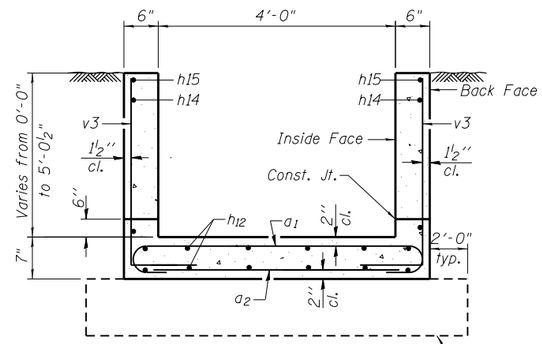

SECTION B-B

Limits of Removal & Disposal of Unsuitable Material for Structures

BILL OF MATERIAL

(For Information Only)

Bar	No.	Size	Length	Shape
a_1	118	#6	6'-0"	
a_2	50	#4	4'-8"	
a_3	12	#6	4'-8"	
b	3	#4	4'-8"	
d_1	5	#4	5'-4"	
h_9	8	#5	2'-8"	
h_{10}	10	#6	2'-3"	
h_{11}	7	#6	20'-9"	
h_{12}	20	#4	19'-1"	
h_{13}	8	#5	20'-9"	
h_{14}	5	#5	23'-0"	
h_{15}	2	#5	16'-3"	
h_{16}	4	#5	2'-1"	
s_1	10	#4	3'-1"	
s_2	5	#4	4'-3"	
v	64	#4	5'-7"	
v_3	20	#4	8'-8"	
DESCRIPTION			UNIT	QTY.
Concrete Box Culverts			Cu. Yd.	11.1
Reinforcement Bars			Pound	2,580

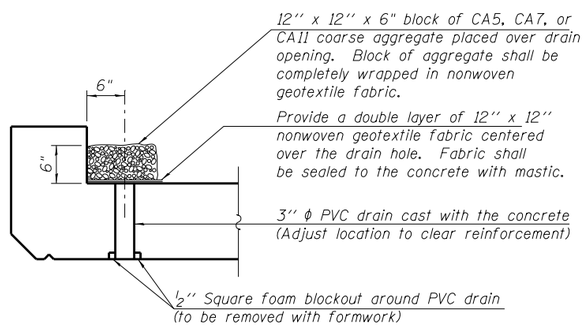

DRAIN DETAIL

(All costs associated with furnishing and constructing the above drain details will not be measured for payment but shall be included in the contract unit price for the end section.)

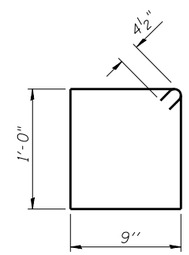

BAR s_2

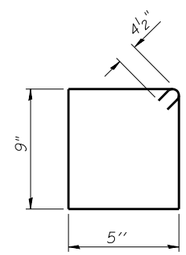

BAR s_1

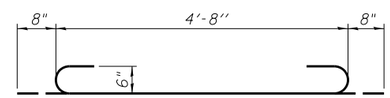

BAR a_1

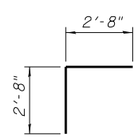

BAR d_1

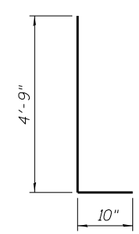

BAR v

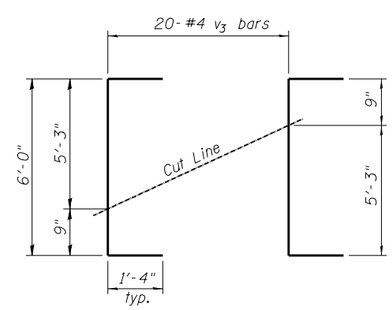

BAR v_3

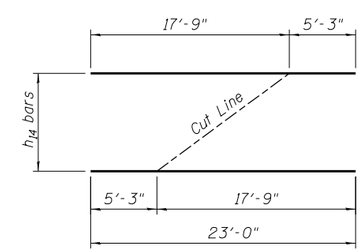

BAR h_{14}

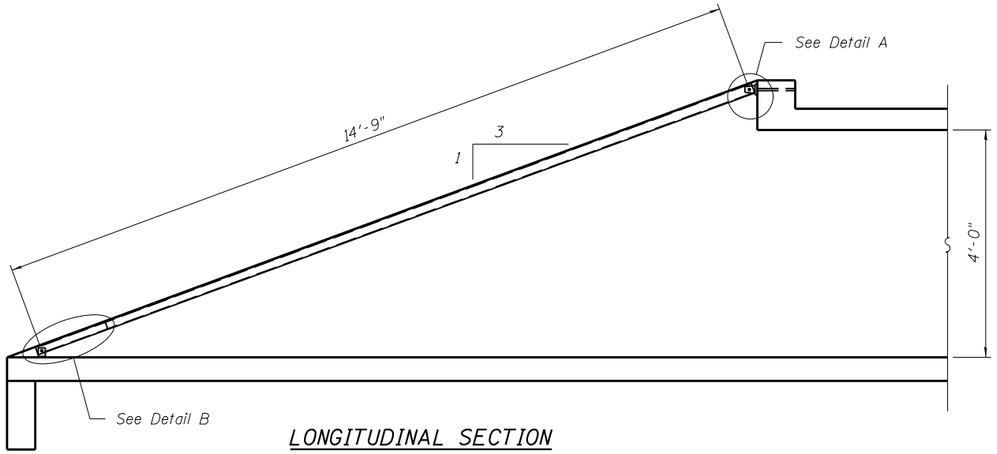

LONGITUDINAL SECTION

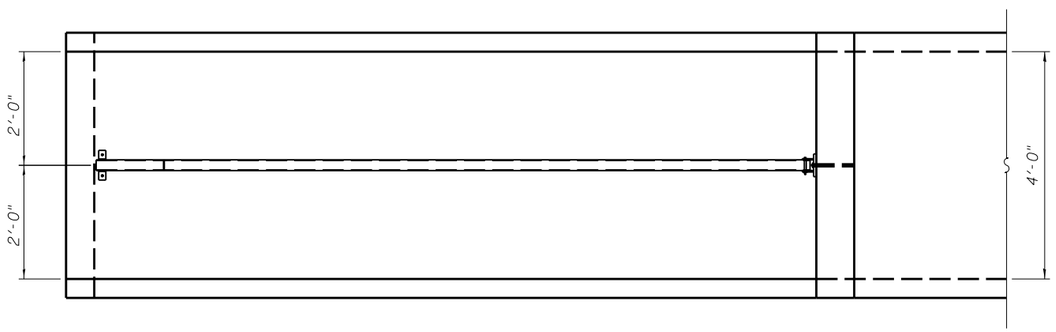

PLAN

GENERAL NOTES

Length shall be determined by the Contractor. All steel pipe shall be standard weight (Sch. 40) unless otherwise noted.

Traversable Steel Pipe System details shown for Box Culvert End Sections. Traversable Steel Pipe System details for other culvert end sections similar.

All components of the Traversable Steel Pipe System shall be galvanized according to the requirements of AASHTO M 111 or M 232 as applicable.

Fabrication of the Traversable Steel Pipe System shall conform to the requirements in Section 505 of the Standard Specifications unless noted otherwise.

Structural steel shapes and plates shall conform to the requirements of Article 1006.04 of the Standard Specifications. Steel pipes shall conform to the requirements of ASTM A 53 (Type E or S), Grade B.

Anchor rods shall conform to the requirements of ASTM F1554, Grade 105. Anchor rods shall be drilled and epoxy grouted according to the requirements of Section 584 of the Standard Specifications. The chemical adhesive system shall be capable of achieving a minimum proof load of 5000 pounds and an ultimate shear capacity of 8000 pounds per anchor.

Bolts and thru bolts shall conform to the requirements of Article 1006.08 of the Standard Specifications except threaded rods conforming to the requirements of ASTM F1554, Grade 105 may be used for the thru bolts.

The minimum edge distance from the center of a hole to the free edge of a structural shape or plate shall be 1 1/2 " unless noted otherwise.

Bolts and anchor rods shall be snug tightened by a few impacts of an impact wrench or the full force of a worker using an ordinary spud wrench unless otherwise noted.

All cost associated with fabricating, furnishing, and installing the Traversable Steel Pipe System will be paid for at the contract unit price per lineal foot for Traversable Pipe Grate.

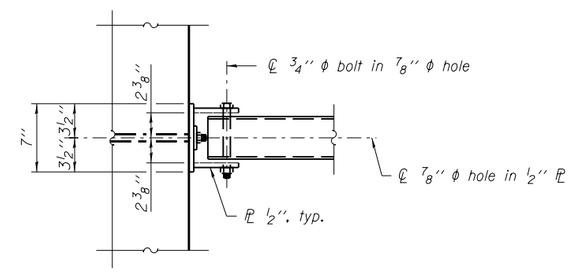

VIEW A-A

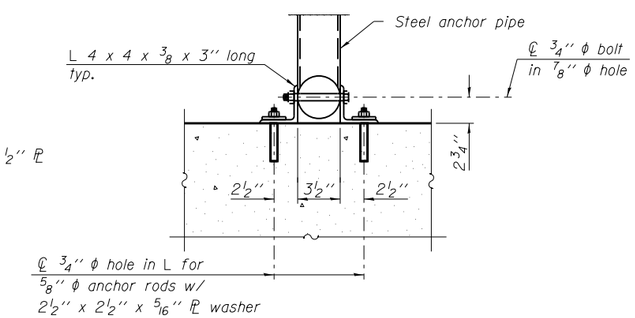

SECTION B-B

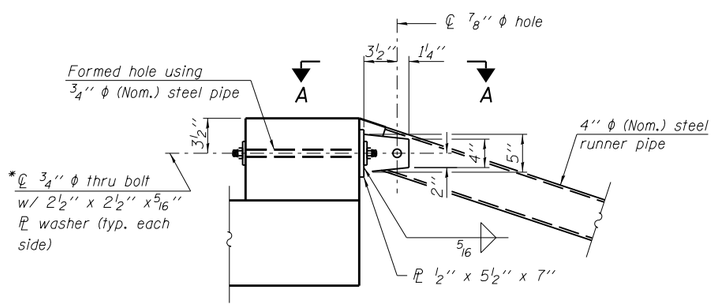

*Bolt shall be tightened per Art. 505.04(f)(2)d of the Standard Specifications

DETAIL A

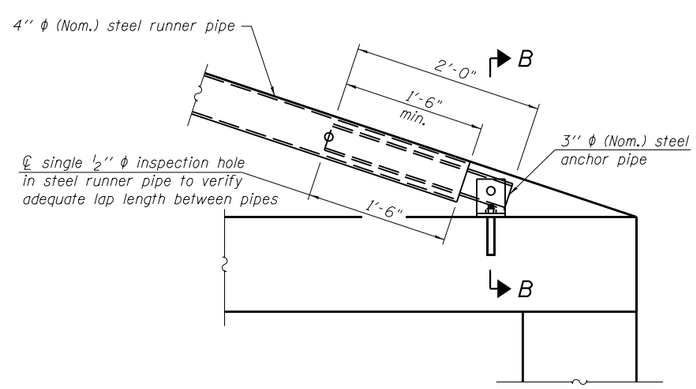

DETAIL B

*** The lap length between pipes may be adjusted in the field to accommodate construction tolerances but shall not be less than 9".

FILE NAME = W:\Projects\2010\100120 PTB 157-25\cadd\Structural\Dgn\WO #3 IL 92 Culverts\Station968+23.08\Final Submittal 13.0320\968+23.08-64H11-007-GratingSystemDtls.dgn

WILLS BURKE KELSEY ASSOCIATES LTD. 116 West Main Street, Suite 201 St. Charles, Illinois 60174	USER NAME = hferstl	DESIGNED - AEU	REVISED -	STATE OF ILLINOIS DEPARTMENT OF TRANSPORTATION	TRAVERSABLE STEEL PIPE SYSTEM STA. 960+23.08 LT.
		CHECKED - DLS	REVISED -		
	PLOT SCALE =	DRAWN - AWH	REVISED -		
	PLOT DATE = 3/20/2013	CHECKED - AEU	REVISED -		SHEET NO. 7 OF 7 SHEETS

F.A.P. RTE.	SECTION	COUNTY	TOTAL SHEETS	SHEET NO.
599	(83MFT & 103MFT)W	ROCK ISLAND	340	198
		CONTRACT NO. 64H11		
FED. ROAD DIST. NO.	ILLINOIS	FED. AID PROJECT		

Existing Structure:
Single 4'x 4' box culvert built in 1940 under Section 66B-15d. The existing box will be extended to the south and a grated drop box constructed. The existing box will be extended to the north and a grated end section constructed. One lane of traffic to be maintained at all times utilizing staged construction.

No salvage.

INDEX OF SHEETS

1. General Plan & Elevation
2. Box Culvert End Section with Drop Box
3. Box Culvert End Section and Drop Box Details
4. Traversable Steel Pipe System with Drop Box
5. Box Culvert End Section
6. Box Culvert End Section Details
7. Traversable Steel Pipe System

GENERAL NOTES

1. The barrel slab and walls shall be poured monolithically with the drop box.
2. All exposed concrete edges shall be chamfered ¾" unless otherwise noted.
3. All construction joints shall be bonded.
4. The contract unit price "Each" for Grated Box Culvert End Sections of the culvert End Section specified shall include the Concrete Box Culverts, Reinforcement Bars, Earth Excavation where required and necessary grading to fit the structures as shown, or to the slope.
5. Plan dimensions and details relative to existing plans are subject to nominal construction variations. The Contractor shall field verify existing dimensions and details affecting new construction and make necessary approved adjustments prior to construction or ordering of materials. Such variatioins shall not be cause for additional compensatiion for a change in scoope of the work, however, the Contractor will be paid for the quantity actually furnished at the unit price bid for the work.
6. This work shall be done according to the applicable portion of of 501, 503, 505, 508, 540 and 584 of the Standard Specifications.
7. Drainage holes shall conform to the requirements of Article 503.11 of the Standard Specifications.
8. A precast option will not be allowed at this site.
9. Nonwoven geotextile fabric shall conform to the requirements of Art. 1080.01 of the Standard Specifications. The minimum weight of the fabric shall be 6 ounces per square yard.

DESIGN SPECIFICATIONS

2002 AASHTO Standard Specifications

DESIGN STRESSES

FIELD UNITS

f'c = 3,500 psi
fy = 60,000 psi (Reinforcement)

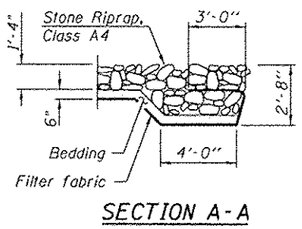

SECTION A-A

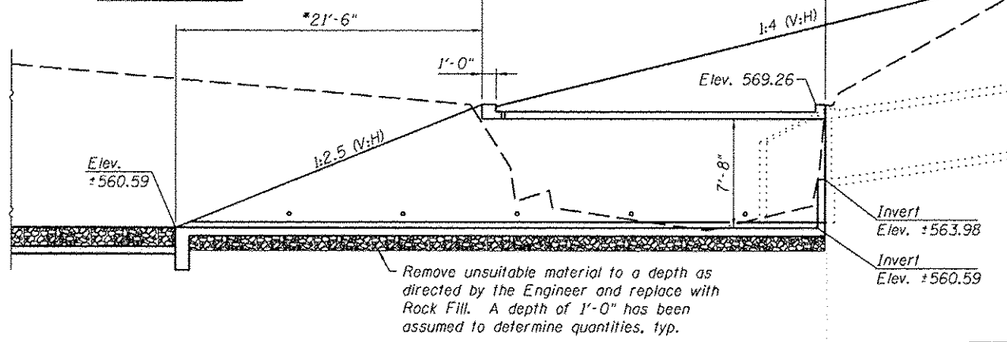

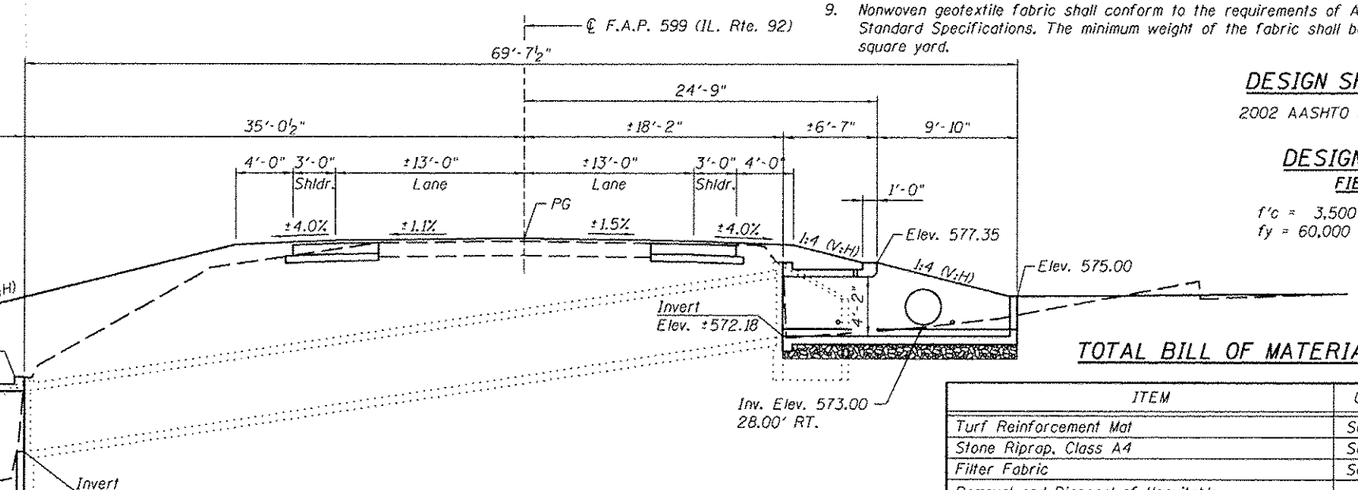

LONGITUDINAL SECTION

*Measured along skew

TOTAL BILL OF MATERIAL

ITEM	UNIT	TOTAL
Turf Reinforcement Mat	Sq. Yd.	31
Stone Riprap, Class A4	Sq. Yd.	60
Filter Fabric	Sq. Yd.	60
Removal and Disposal of Unsuitable Material for Structures	Cu. Yd.	21
Box Culvert End Sections, Culvert No. 13	Each	1
Box Culvert End Sections, Culvert No. 14	Each	1
Traversable Pipe Grate	Foot	33.0
Rock Fill	Ton	38

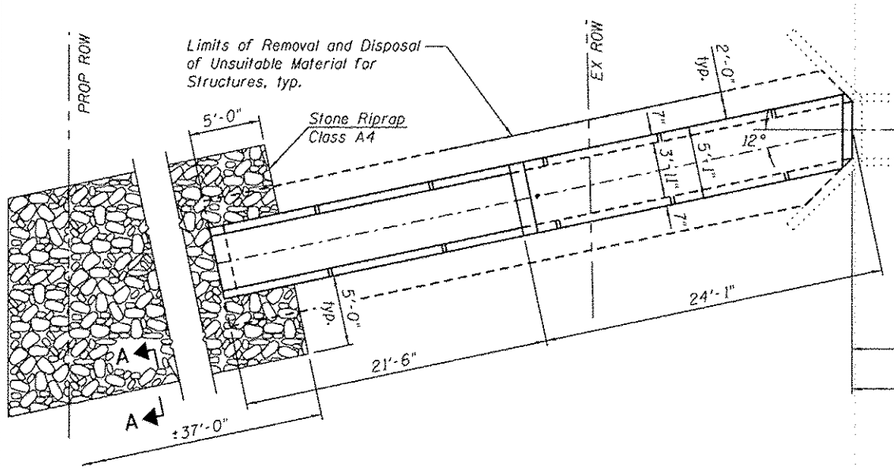

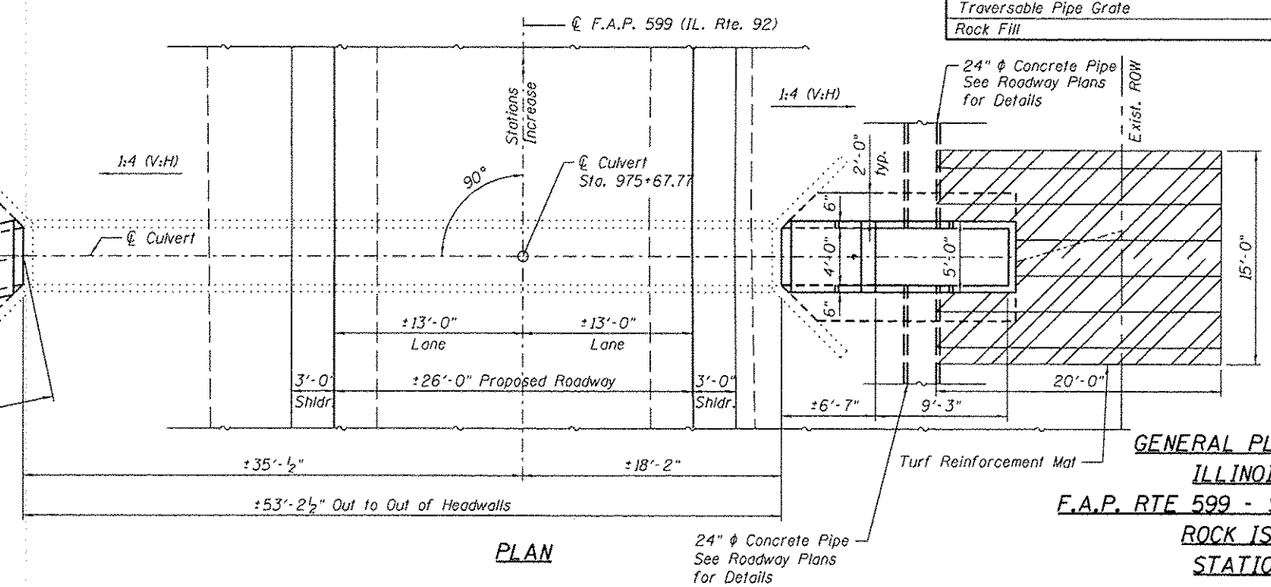

PLAN

STATE OF ILLINOIS
ANDREW E. UNDERWAGER
081-006218
CHICAGO, IL
LICENSED STRUCTURAL ENGINEER

Signature: Andrew E. Underwager
Date 3-13-2013
License Expires: 11-30-2014

GENERAL PLAN & ELEVATION
ILLINOIS ROUTE 92
F.A.P. RTE 599 - SEC. (83MFT & 103MFT)W
ROCK ISLAND COUNTY
STATION 975+67.77

FILE NAME = W:\Projects\2818\128128 PTB 157-29\cadd\Structural\Dgn\WG +3 IL 92 Culverts\Station975+67.77\Final Submittal 13\8328\975+67.77-64H11-081-GPE.dgn

WBK WILLS BURKE KELSEY ASSOCIATES LTD. 115 West Main Street, Suite 201 St. Charles, Illinois 60174	USER NAME = hfarstl	DESIGNED - AWH	REVISED -
		CHECKED - AEU	REVISED -
	PLOT SCALE =	DRAWN - AWH	REVISED -
	PLOT DATE = 3/28/2013	CHECKED - AEU	REVISED -

STATE OF ILLINOIS
DEPARTMENT OF TRANSPORTATION

GENERAL PLAN & ELEVATION
STA. 975+67.77
SHEET NO. 1 OF 7 SHEETS

F.A.P. RTE.	SECTION	COUNTY	TOTAL SHEETS	SHEET NO.
599	(83MFT & 103MFT)W	ROCK ISLAND	340	199
		CONTRACT NO. 64H11		
FED. ROAD DIST. NO.	ILLINOIS	FED. AID PROJECT		

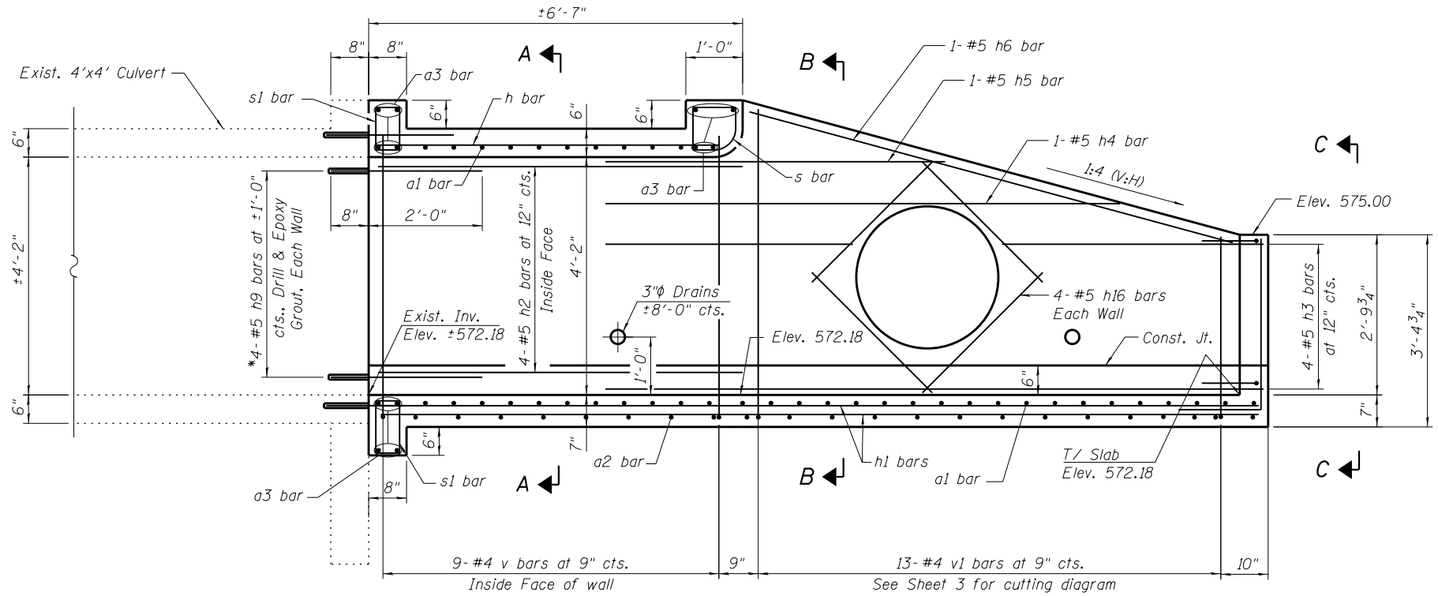

*Epoxy grout reinforcement bars according to the requirements of Section 584 of the Standard Specifications. Chemical adhesive system shall be capable of achieving a minimum proof load of 5,000 lb. Cost included in the pay item Box Culvert End Sections, Culvert No. 13.

LONG. SECTION

Order v1 bars full length. Cut to fit as shown and use remainder of bars in opposite wall.

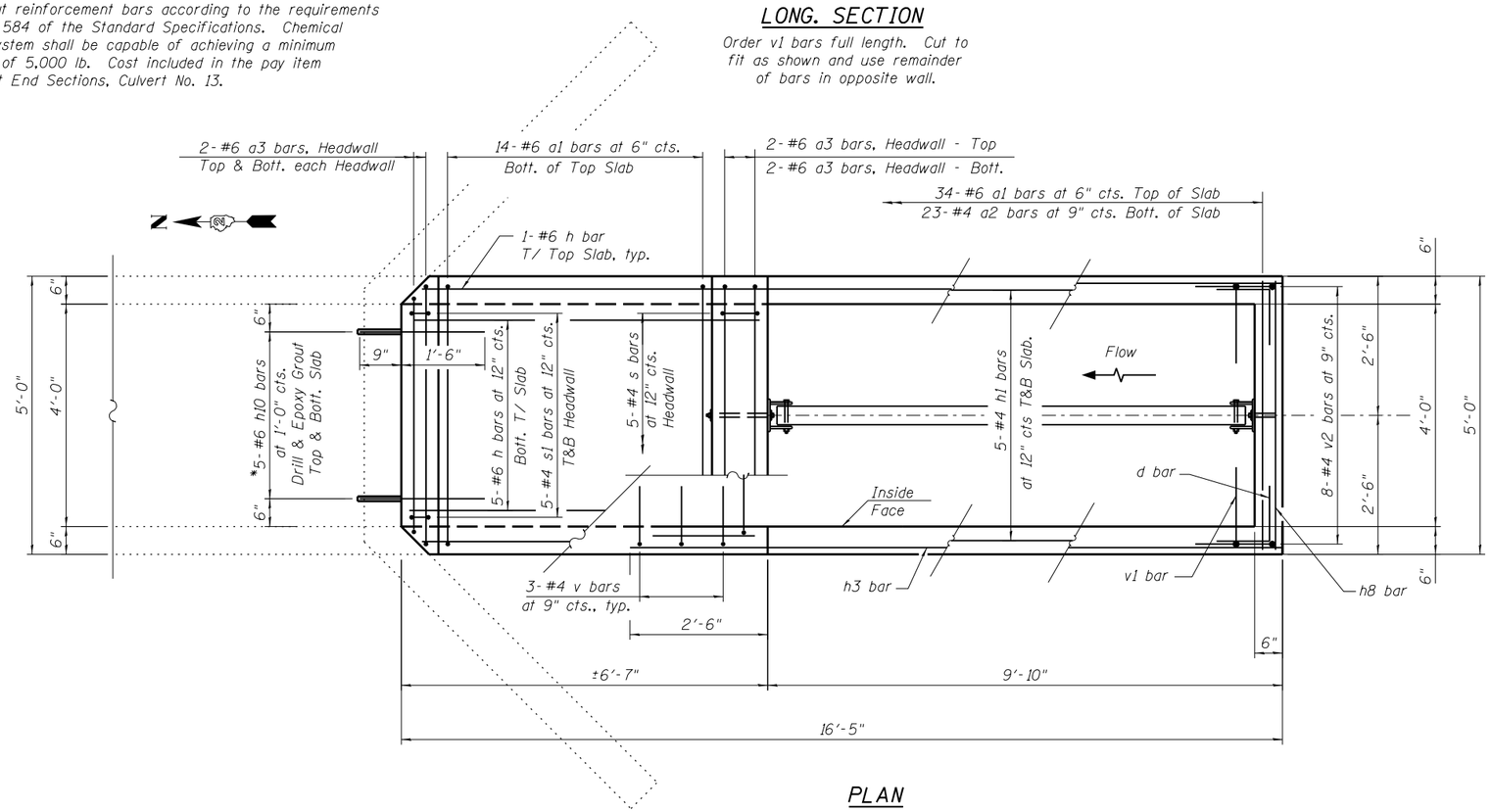

PLAN

FILE NAME = W:\Projects\2010\100120 PTB 157\25\cadd\Structural\Dgn\WD *3 IL 92 Culverts\Station975+67.77\Final Submittal 130320\975+67.77-64H11-002-Drop Box.dgn

WILLS BURKE KELSEY ASSOCIATES LTD. 116 West Main Street, Suite 201 St. Charles, Illinois 60174	USER NAME = hferstl	DESIGNED - AEU	REVISED -	STATE OF ILLINOIS DEPARTMENT OF TRANSPORTATION	BOX CULVERT END SECTION WITH DROP BOX STA. 975+67.77 RT.	F.A.P. RTE. 599	SECTION (83MFT & 103MFT)W
		CHECKED - DLS	REVISED -			COUNTY ROCK ISLAND	TOTAL SHEETS 340 / SHEET NO. 200
	PLOT SCALE =	DRAWN - AH	REVISED -			CONTRACT NO. 64H11	
	PLOT DATE = 3/20/2013	CHECKED - AEU	REVISED -		SHEET NO. 2 OF 7 SHEETS	FED. ROAD DIST. NO.	ILLINOIS FED. AID PROJECT