CONTRACT NO. 60B81

F.A.U. RTE.	SECTION	COUNTY	TOTAL SHEETS	SHEET NO.
2503	49BR-1	KANE	27	5
STA.		TO STA.		
FED. ROAD DIST. NO.	ILLINOIS	FED. AID PROJECT		

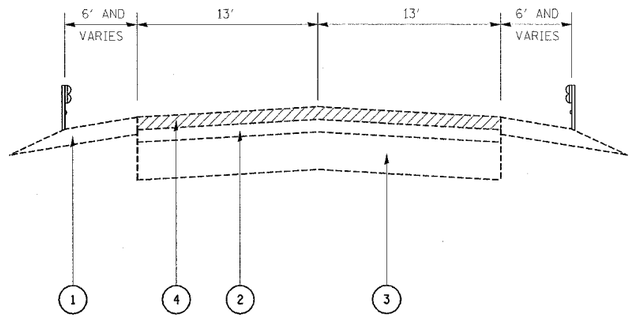

EXISTING TYPICAL SECTION (ILL. RTE. 25)
STA 60+57 - STA 61+57
STA 62+22 - STA 63+22

NOTE: EXISTING BRIDGE TYPICAL SECTION (SN 045-0045)
STA 61+57 - STA 62+22
SEE BRIDGE PLAN SH 3

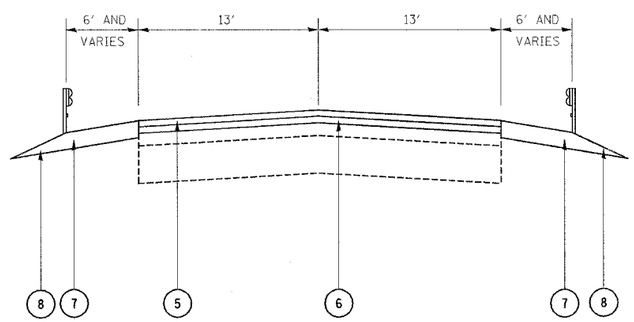

PROPOSED TYPICAL SECTION (ILL. RTE. 25)
STA 60+57 - STA 61+57
STA 62+22 - STA 63+22

NOTE: PROPOSED BRIDGE TYPICAL SECTION (SN 045-0045)
STA 61+57 - STA 62+22
SEE BRIDGE PLAN SH 3

LEGEND

1. EXISTING AGGREGATE SHOULDER
2. EXISTING HMA OVERLAYCOURSE
3. EXISTING PCC PAVEMENT
4. PROPOSED HMA SURFACE REMOVAL, 2"
5. PROPSED HMA SURFACE COURSE, MIX "D", N70, 1½"
6. PRPOSED HMA LEVELING BINDER, MACHINE METHOD, N70, 1½"
7. PRPOSED GRADING AND SHAPING SHOULDERS
8. PRPOSED AGGREGATE WEDGE SHOULDER, TYPE B

BITUMINOUS MIXTURE REQUIREMENTS

MIXTURE USE	AC/PG	AIR VOIDS
HOT-MIX ASPHALT SURFACE COURSE, IL-9.5MM MIX "D", N70	PG 64-22	4% @ 70 GYR
HOT-MIX ASPHALT BINDER COURSE,* IL-9.5MM, N70 (MACHINE METHOD)	PG 64-22/ 58-22	4% @ 70 GYR

NOTE: THE UNIT WEIGHT USED FOR ALL BITUMINOUS SURFACE MIXTURES IS 112 LBS./SQ.YD./IN.

* WHEN RAP EXCEEDS 20% THE NEW ASPHALT BINDER SHALL BE PG58-22.

REVISIONS	
NAME	DATE

ILLINOIS DEPARTMENT OF TRANSPORTATION

IL 25 OVER NORTON CREEK TYPICAL SECTIONS

SCALE: VERT. HORIZ.
DATE
DRAWN BY
CHECKED BY

PLOT DATE = 5/18/2007
FILE NAME = c:\projects\d1460b0\d1460b0sa02
PLOT SCALE = 50.0000 ' / IN.
USER NAME = bpatch