FAI ROUTE	SECTION	COUNTY	TOTAL SHEETS	SHEET NO
64	95-(5,6)I	WASHINGTON	11	5
STA.		TO STA.		
CONTRACT NO.: 76A38				

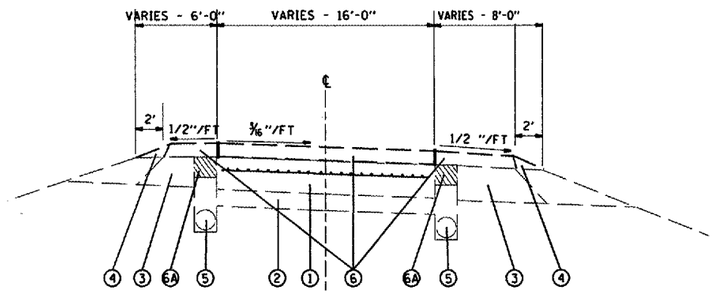

EXISTING TYPICAL RAMP SECTION
RAMP 1 109+15 - 120+00
RAMP 2 200+00 - 206+95
RAMP 3 300+00 - 305+75
RAMP 4 407+93 - 419+76

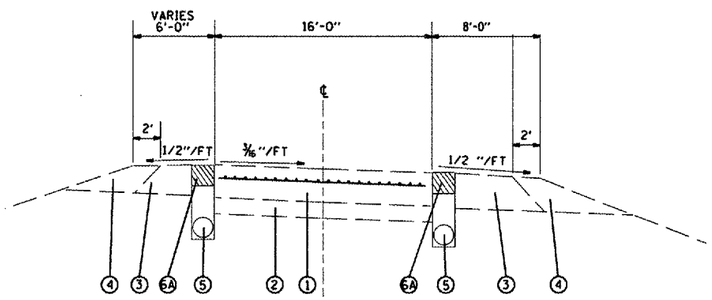

EXISTING TYPICAL RAMP SECTION
RAMP 1 101+86 - 109+15
RAMP 2 206+95 - 211+95
RAMP 3 305+75 - 313+75
RAMP 4 402+15 - 407+93

LEGEND

1. EXISTING CONT. REINFORCED P.C.C. PAVEMENT 8"
2. EXISTING STABILIZED SUB-BASE 4"
3. EXISTING STABILIZED SHOULDERS 8"
4. EXISTING AGGREGATE SHOULDER
5. EXISTING PIPE UNDERDRAINS, 4"
6. EXISTING BITUMINOUS OVERLAY - 3 1/4"
6A. EXISTING SHOULDER REMOVAL & REPLACEMENT 5"

PARTIAL DEPTH PATCHING DETAIL

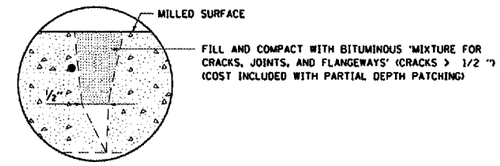

DETAIL A

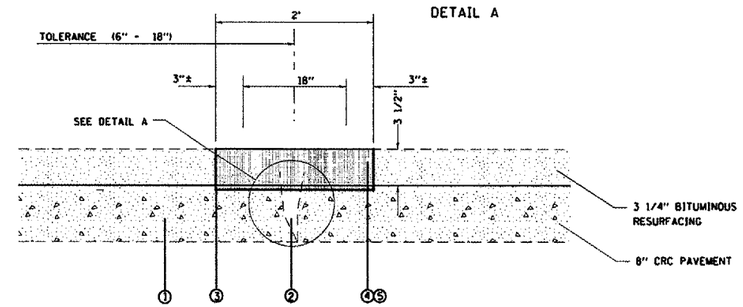

LEGEND

1. EXISTING CRCP PAVEMENT, 8"
2. EXISTING LONGITUDINAL PAVEMENT CRACK
3. EXISTING PAVEMENT REINFORCEMENT
4. PROPOSED PARTIAL DEPTH REMOVAL, 2"
5. PROPOSED PARTIAL DEPTH PATCHING (HMA CONCRETE MIXTURE D)

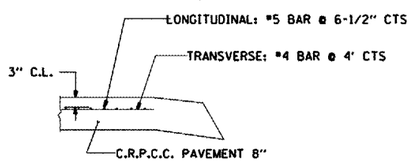

DETAIL OF EXISTING PAVEMENT REINFORCEMENT

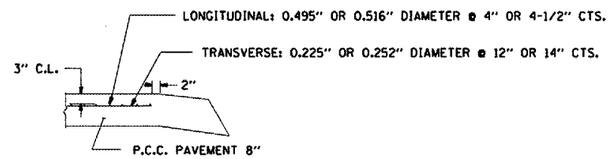

DETAIL OF EXISTING RAMP REINFORCEMENT

REVISIONS NAME	DATE

ILLINOIS DEPARTMENT OF TRANSPORTATION
TYPICAL RAMP SECTIONS AND PARTIAL DEPTH PATCHING DETAILS
FAI ROUTE 64
SECTION 95-(5,6)I
WASHINGTON COUNTY

SCALE: VERT. HORIZ. DRAWN BY
DATE CHECKED BY

Rev.

PLOT DATE : 5/8/2007
FILE NAME : c:\pw_work\d0187\plan\pb-d0187x.dgn
PLOT SCALE : 1:1 / 1 IN.
REFERENCE : REF