F.A. ROUTE NO.	SECTION	COUNTY	TOTAL SHEETS	SHEET NO.
	06-00028-00-LS	LAKE	18	10
STA.	TO STA.			
FED. ROAD DIST. NO. C-91-150-07		ILLINOIS	FED AID PROJECT TE-00D1(757)	

CONTRACT NO.: 83930

SCALE: 1" = 10'

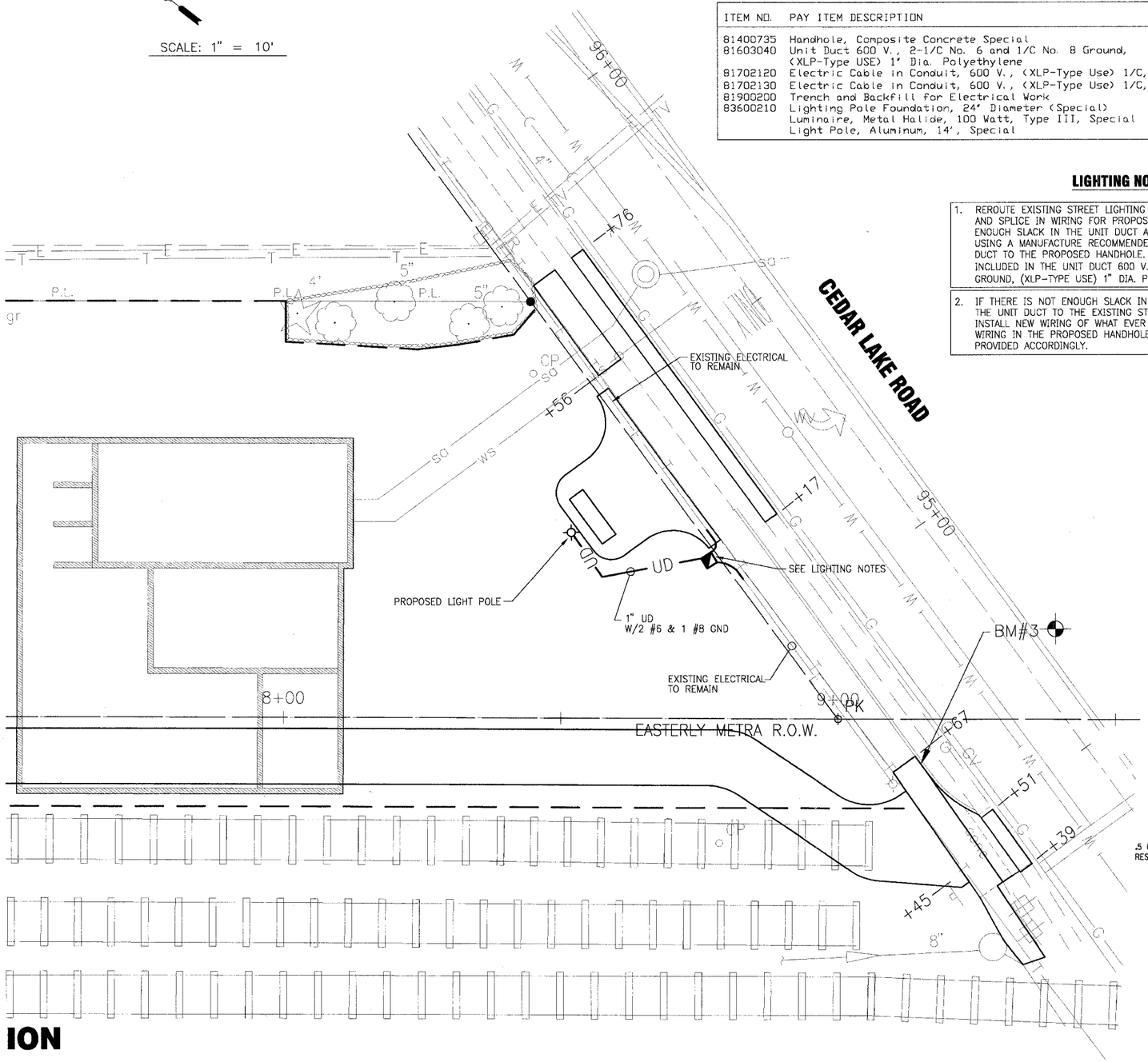

LIGHTING QUANTITIES

ITEM NO.	PAY ITEM DESCRIPTION	UNIT	QUANTITY
81400735	Handhole, Composite Concrete Special	EACH	1
81603040	Unit Duct 600 V., 2-1/C No. 6 and 1/C No. 8 Ground, (XLP-Type USE) 1" Dia. Polyethylene	FOOT	50
81702120	Electric Cable in Conduit, 600 V., (XLP-Type Use) 1/C, No. 8	FOOT	60
81702130	Electric Cable in Conduit, 600 V., (XLP-Type Use) 1/C, No. 6	FOOT	120
81900200	Trench and Backfill for Electrical Work	FOOT	40
83600210	Lighting Pole Foundation, 24" Diameter (Special)	FOOT	5
	Luminaire, Metal Halide, 100 Watt, Type III, Special	EACH	1
	Light Pole, Aluminum, 14', Special	EACH	1

LIGHTING NOTES

1. REROUTE EXISTING STREET LIGHTING UNIT DUCT TO PROPOSED HANDHOLE AND SPLICE IN WIRING FOR PROPOSED LIGHT POLE. IF THERE IS NOT ENOUGH SLACK IN THE UNIT DUCT ADD WHAT EVER LENGTH IS NEEDED BY USING A MANUFACTURE RECOMMENDED SPLICE KIT TO EXTEND THE UNIT DUCT TO THE PROPOSED HANDHOLE. COST OF ADDITIONAL UNIT DUCT IS INCLUDED IN THE UNIT DUCT 600 V., 2-1/C NO. 6 AND 1/C NO. 8 GROUND, (XLP-TYPE USE) 1" DIA. POLYETHYLENE PAY ITEM.
2. IF THERE IS NOT ENOUGH SLACK IN THE WIRING, REMOVE THE WIRING IN THE UNIT DUCT TO THE EXISTING STREET LIGHT POLE TO THE SOUTH AND INSTALL NEW WIRING OF WHAT EVER LENGTH IS REQUIRED TO SPLICE THE WIRING IN THE PROPOSED HANDHOLE. QUANTITIES FOR THIS WORK ARE PROVIDED ACCORDINGLY.

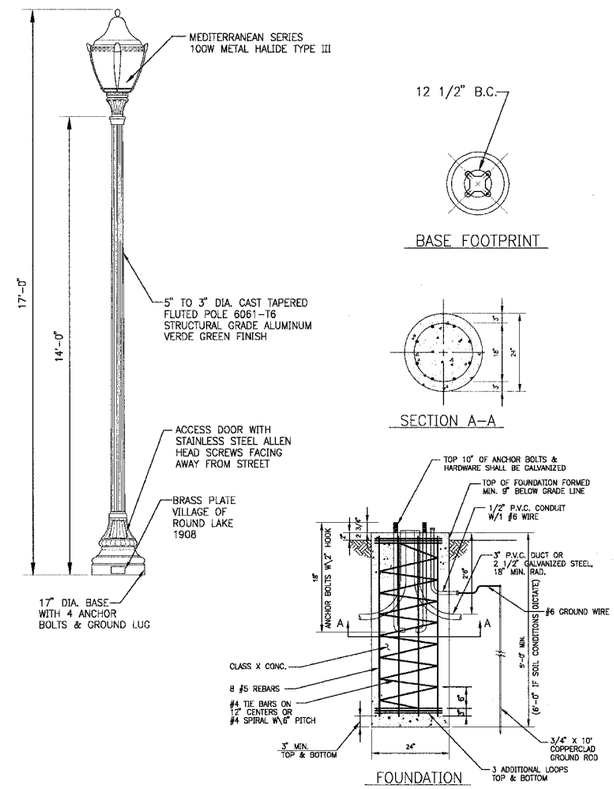

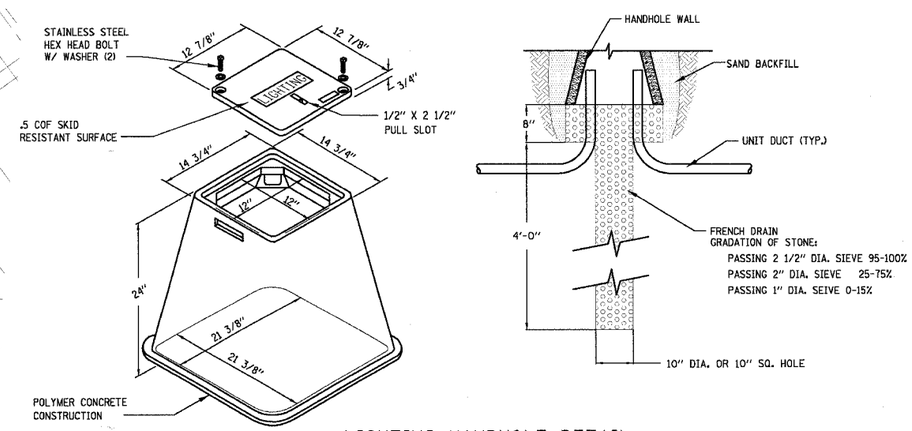

CONSULTANTS	REV. NO.	DATE	DESCRIPTION
	1	4/4/07	VILLAGE/IDOT/LCDOT/METRA REVIEW
	2	5/10/07	VILLAGE/IDOT/LCDOT/METRA REVIEW

* - REFER TO EQUIPMENT MANUFACTURER'S SHOP DRAWINGS

1" .5" 0 1" 2" 3"

BAXTER & WOODMAN Consulting Engineers

Baxter & Woodman
Crystal Lake, Illinois 815.459.1260
Burlington, Wisconsin 262.763.7824
Mokena, Illinois 708.478.2090
DeKalb, Illinois 815.787.3111
Crystal Lake, Illinois 847.223.5080
Rockford, Illinois 815.489.1561
Plainfield, Illinois 815.609.7425

VILLAGE OF ROUND LAKE, ILLINOIS
METROPOLITAN CORRIDOR BEAUTIFICATION AND PEDESTRIAN ACCESS ACCOMMODATION PROJECT

METROPOLITAN CORRIDOR LIGHTING PLAN
STA. 8+00 TO STA. 9+50

DESIGNED BY	SCALE
JLR	HORIZ: 1"=10'
DRAWN BY	PROJECT NO.
UKB	060749
CHECKED BY	SHEET NO.
MDK	10 OF 18
DATE	
2-09-07	

Z:\ROULK\060749 ITEP\DWGS\060749APLN.dwg - LGHT-SI-10
Plotted: 5-10-07 @ 8:34:- By: SOUzar
Copyright ©2006, by Baxter & Woodman, Inc.
Schaumburg, Illinois - Registered Design Firm
License No. 184-001212 - Expires 4-30-07