CONTRACT NO. 95520

T.R. RTE.	SECTION	COUNTY	TOTAL SHEETS	SHEET NO.
335A	06-15129-00-BR	SHELBY	11	6
STA. 20+00	TO STA. 25+00			
FED. ROAD DIST. NO.	ILLINOIS	FED. AID PROJECT		

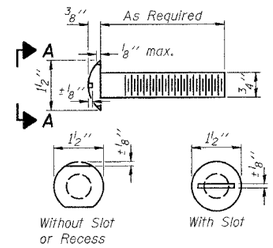

VIEW A-A
ROUND HEAD BOLT

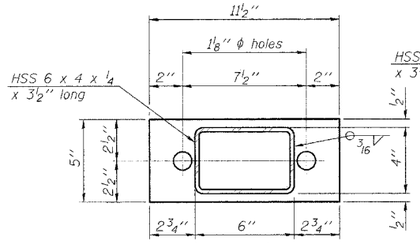

PL 1/2" x 11 1/2" x 5"

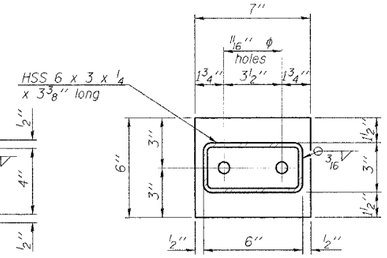

PL 1/2" x 7" x 6"

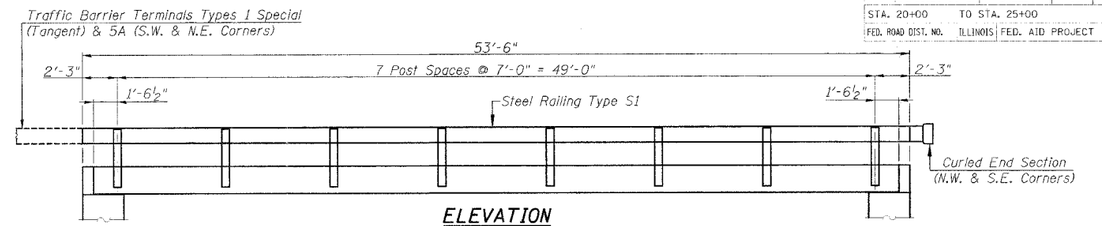

ELEVATION
(Showing Outside Face)

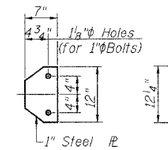

SECTION E-E

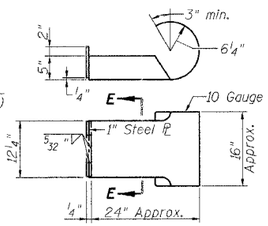

CURLED END SECTION
DETAILS (2 Required)

Notes:

All field drilled holes shall be coated with an approved zinc rich paint before erection.

For multi-span bridges, sufficient 1/4" x 6" x 1'-2" galvanized steel shims shall be provided to align rail between adjacent spans. Cost included with Steel Railing, Type S1.

All steel rail elements shall be galvanized according to Article 509.05 of the Standard Specifications.

The studs of the anchor devices shall be placed below the top reinforcement bars and the outermost longitudinal reinforcement bar shall be placed directly above the studs of the rail post anchor device.

Hollow structural steel tubing shall conform to the requirements of A.S.T.M. A-500 Grade B Structural Steel Tubing and shall meet the longitudinal CVN requirements of 15 ft-lbs at 0° F.

All other steel shapes and plates shall conform to the requirements of A.A.S.H.T.O. M-270 Grade 36 except posts and angles shall conform to A.A.S.H.T.O. M-270, Grade 50.

Bolts, cap screws, and nuts shall conform to the requirement of A.S.T.M. designation A-307 except for high strength bolts, nuts, and washers noted which shall conform to A.A.S.H.T.O. M-164.

All posts, railing, rail splices, anchor devices, angles and tube spacers shall be galvanized after shop fabrication in accordance with A.A.S.H.T.O. M-111 and A.S.T.M. A-385. Galvanized rail shall not be painted.

All bolts, nuts, cap screws, washers and lock washers shall be galvanized in accordance with A.A.S.H.T.O. M-232.

Railing shall be in accordance with Section 509 of the Standard Specifications, except as noted, and will be paid for at the contract unit price per foot for Steel Railing, Type S1.

The lower portion of the post flange in contact with concrete shall receive a 1/8" fabric bearing pad between the plate and concrete.

The 3/4" ϕ high strength bolts used to connect the 6" x 4" x 3/4" angles to the post shall be tightened in accordance with Article 505.04(f)(2) of the Standard Specifications. The 1" ϕ high strength bolts connecting the angles to the concrete shall be tightened to a snug fit and given an additional 1/8 turn. The 5/8" ϕ cap screws in bottom of posts shall be tightened to a snug fit only.

The cost of curled end sections shall be included in the cost of Steel Railing, Type S1.

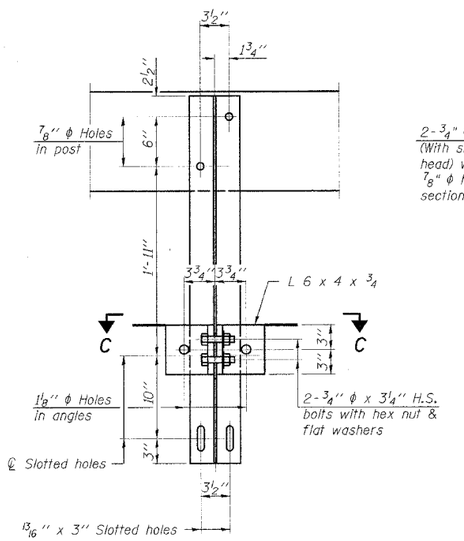

SECTION B-B

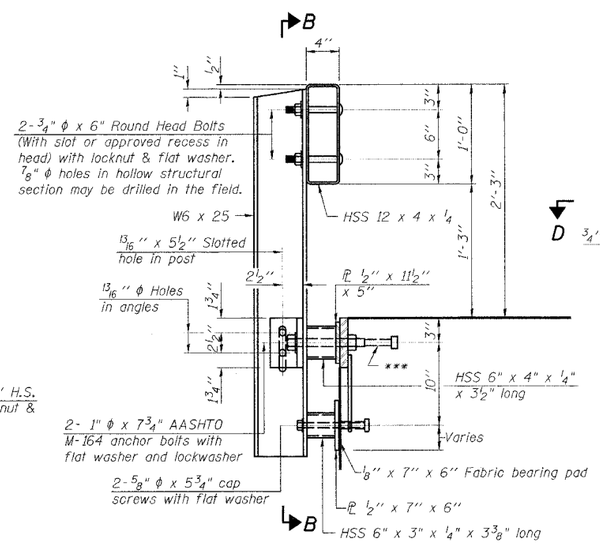

SECTION AT RAILING POST

** Whenever the lower insert assemblies interfere with strand locations, the #3 bars shall be cut and adjusted in order to allow raising or lowering of the lower inserts. Maximum adjustment not to exceed 1/2".

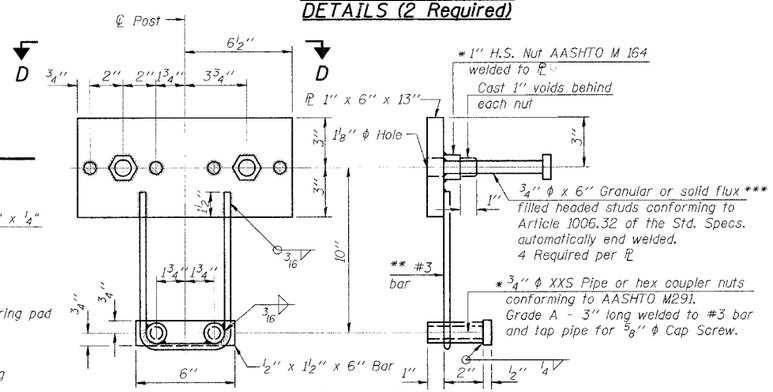

ANCHOR DEVICE

Threaded areas shall be plugged or blocked off during casting of beam.

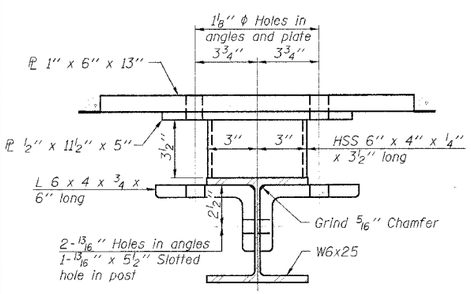

SECTION C-C

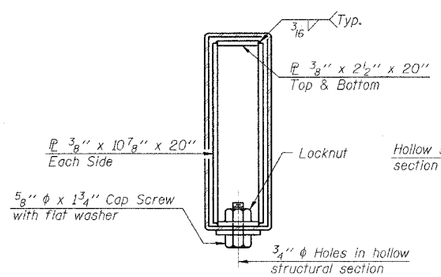

SECTIONS AT RAIL SPLICE

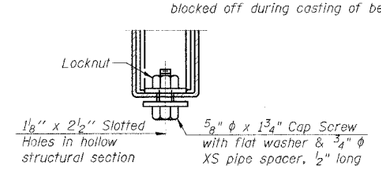

RAIL SPLICE CONNECTION
AT EXPANSION JT.

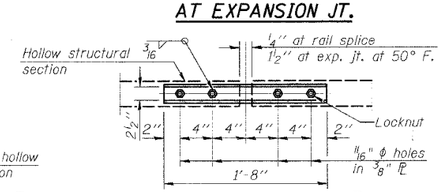

PLAN-BOTT. SPLICE PL
TYPICAL

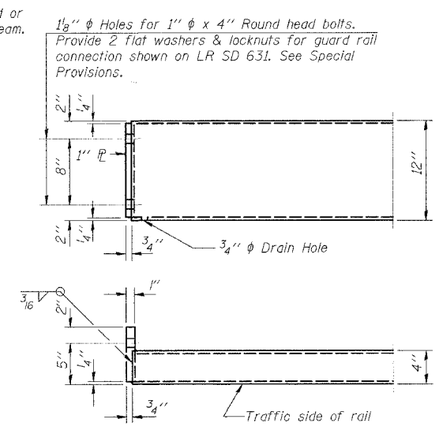

END OF RAIL DETAILS

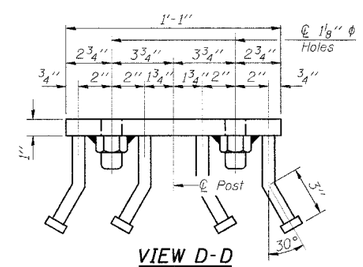

VIEW D-D

BILL OF MATERIAL

Item	Unit	Quantity
Steel Railing, Type S1	Foot	107

STEEL RAILING, TYPE S1
T.R. 335A OVER BRUSH CREEK
SECTION 06-15129-00-BR
SHELBY COUNTY

PLOT DATE = $DATE$
FILE NAME = $FILEL$