For anchor rod size and placement, see Support Frame Detail Sheet.

** Anchor rod shall be ground or filed to bright metal at clamp and cable connection location.

*** A normal surface finish followed by a Bridge Seat Sealer application will be required on concrete surfaces above the lowest elevation 6" below finished ground line. Cost included in Concrete Foundations.

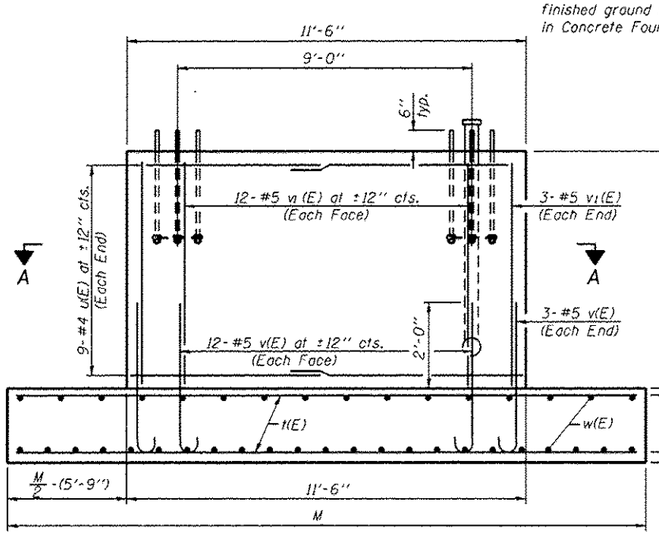

SIDE ELEVATION

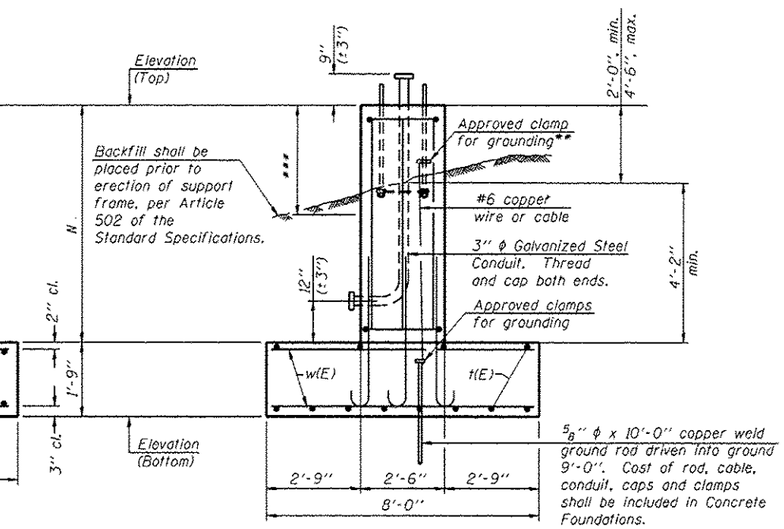

END ELEVATION

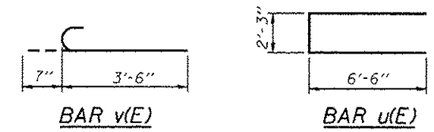

BAR LIST - EACH FOUNDATION

Bar	Number	Size	Length	Shape
t(E)	14	#5	*	
u(E)	18	#4	15'-3"	
v(E)	30	#5	4'-1"	
v1(E)	30	#5	*	
w(E)	39	#5	7'-9"	

*Length of t(E) bar = (Dim. M) - 6"
v1(E) bar = (Dim. N) - 3"

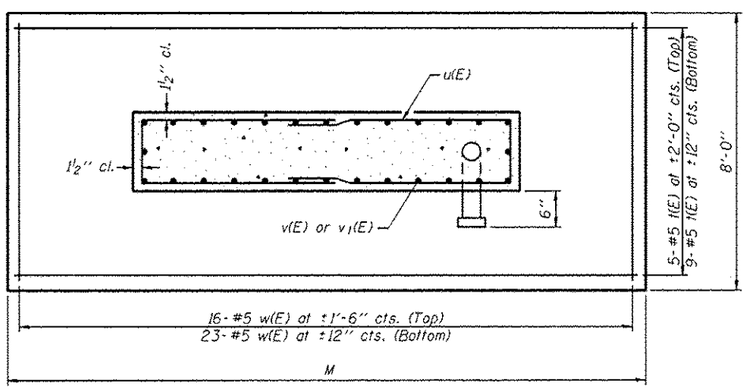

SECTION A-A

Structure Number	Station	Left Foundation				Right Foundation				Class SI Concrete (Cu. Yds.)
		Elevation Top	Elevation Bottom	N	M	Elevation Top	Elevation Bottom	N	M	
1S0491094L000.8	4081+75	730.82	721.65	7'-5"	31'-0"	734.63	725.46	7'-5"	31'-0"	48.0

Note:
The foundation dimensions shown are based on the presence of mostly cohesive soils with an average Unconfined Compressive Strength (Qu) of at least 1.0 tsf, which must be determined by previous soil investigations at the jobsite. When other conditions are indicated, the boring data will be included in the plans and the foundation dimensions shown will be the result of site specific designs.
During construction, if footing length or width or wall height change by more than 12", or if reinforcement is changed, "as-built" plans shall be prepared and submitted to the District Bureau of Operations for future reference.

BOWMAN, BARRETT & ASSOCIATES INC.
CONSULTING ENGINEERS
Chicago, Illinois
312.228.0100
www.bbandainc.com

DETAILS FOR 12" ϕ SUPPORT FRAME

OS-F4 1-20-11

FILE NAME = $FILES$	USER NAME = default	DESIGNED - TF	REVISED 7/17/2012 JMG	STATE OF ILLINOIS DEPARTMENT OF TRANSPORTATION
		CHECKED - RGR	REVISED	
	PLOT SCALE = H:1"=10' V:1"=5'	DRAWN - TF	REVISED	
	PLOT DATE = 7/16/2012	CHECKED - RGR	REVISED	

OVERHEAD SIGN STRUCTURES
SPREAD FOOTING DETAILS
SHEET NO. 12 OF 12 SHEETS

F.A. RTE.	SECTION	COUNTY	TOTAL SHEETS	SHEET NO.
94	49-1-R-1	LAKE	677	302

CONTRACT NO. 60L77
ILLINOIS FED. AID PROJECT

77 Sheets\2016\60L77-sht-signstructures_details.dgn