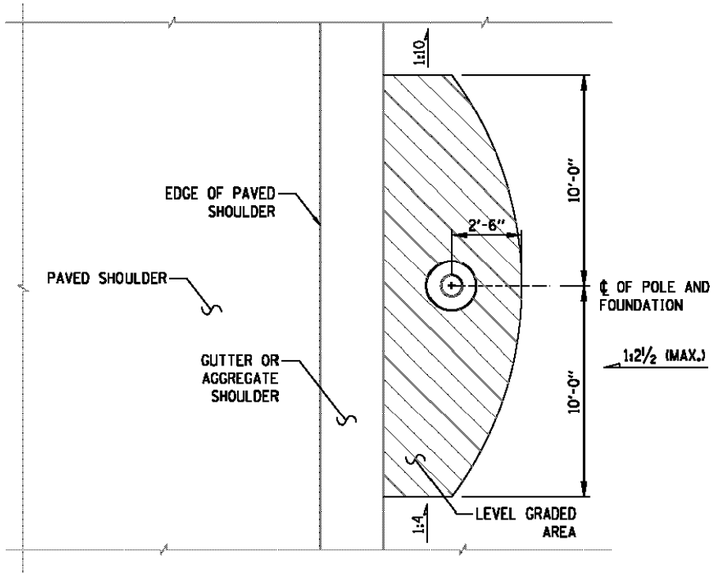

PLAN

HELIX FOUNDATION GRADING PLAN WITH BACKSLOPE

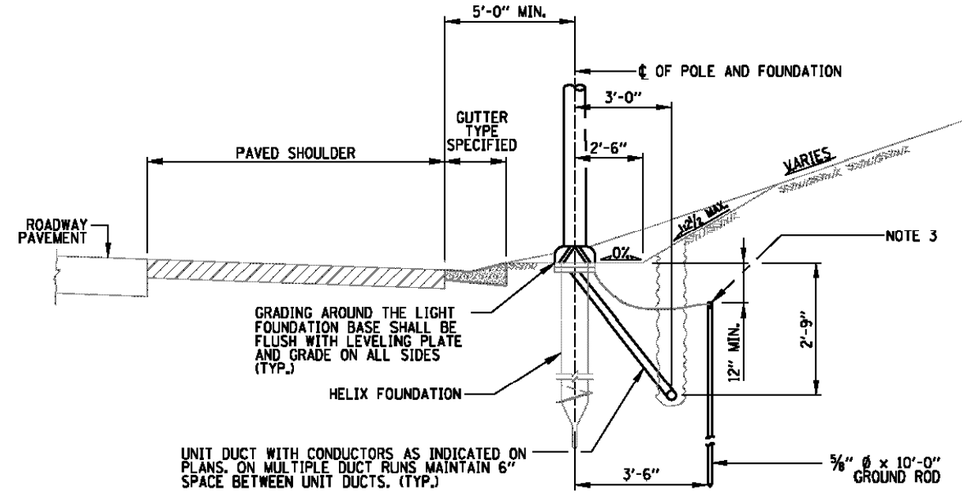

HELIX FOUNDATION ADJACENT TO GUTTER WITH BACKSLOPE

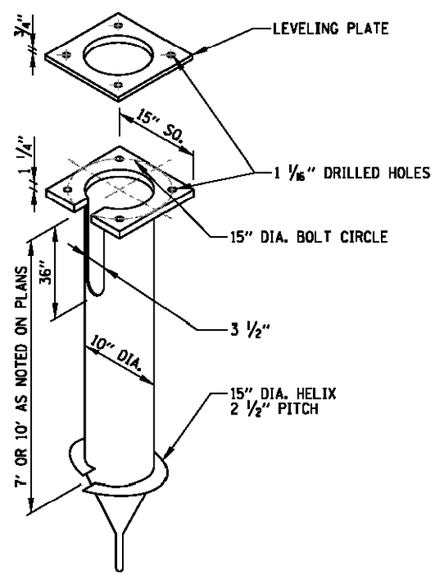

HELIX FOUNDATION

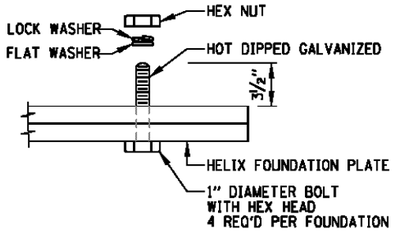

HELIX FOUNDATION BASE ATTACHMENT DETAIL

NOTE:

SEE SHEET 1 OF THIS SERIES FOR NOTES.

SHEET 4 OF 6

Illinois Tollway
Open Roads for a Future

LIGHT STANDARD FOUNDATION

STANDARD H1-01

Paul Kovacs
APPROVED ..... CHIEF ENGINEER ..... DATE 2-7-2012

EJM ENGINEERING, INC.
411 South Wells Street Suite 1000
Chicago, Illinois 60607

s:\projects\3031 us 41-usc to il 173 - bba\project work\disciplines\electrical\sheets\01608.77-ahs-light.49.dgn

FILE NAME	USER NAME = rsweeson	DESIGNED - RAS	REVISED -	STATE OF ILLINOIS DEPARTMENT OF TRANSPORTATION	TOLLWAY STANDARD DRAWINGS	F.A. RTE.	SECTION	COUNTY	TOTAL SHEETS	SHEET NO.
		DRAWN - BHH	REVISED -			94	49-1-R-1	LAKE	677	409
	PLOT SCALE = NONE ' / IN.	CHECKED - MKR	REVISED -					CONTRACT NO. 60L77		
	PLOT DATE = 6/18/2012	DATE - 6/19/2012	REVISED -		SCALE: NONE / SHEET NO. 49 OF 53 SHEETS / STA. TO STA.		ILLINOIS FED. AID PROJECT			

E-49