GREATER ROCKFORD AIRPORT AUTHORITY
ROCKFORD, ILLINOIS

CONSTRUCTION PLANS
FOR
CHICAGO ROCKFORD INTERNATIONAL AIRPORT

LICENSED PROFESSIONAL ENGINEER
MARC L. KATZ
062-060369
STATE OF ILLINOIS
Exp. 11/30/2012

EAST TERMINAL AUTO PARKING LOT, PHASE 1

FINAL SUBMITTAL

ILLINOIS PROJECT: RFD-4187

JULY 06, 2012
(AUGUST 03, 2012 LETTING)

ROCKFORD
RFD
CHICAGO ROCKFORD
INTERNATIONAL AIRPORT

Greater Rockford Airport Authority

APPROVED BY *AMY M. OTT*
DEPUTY DIRECTOR

DATE *JULY 06, 2012*

DESIGN INFORMATION

TOWNSHIP: 43 NORTH
RANGE: 1 EAST

COUNTY: WINNEBAGO
ROCKFORD TOWNSHIP

ALP DATA: APPROACH CAT. / DESIGN GROUP: D5
DESIGN AIRCRAFT: 747-400

(MAXIMUM EQUIPMENT HEIGHT = 25')

Call Before You Dig
JULIE
CELEBRATING 30 YEARS OF DAMAGE PREVENTION

CALL J.U.L.I.E BEFORE EXCAVATING
1-800-892-0123

INDEX TO SHEETS

SHEET NO.	DESCPRIPTION
1	COVER SHEET
2	SUMMARY OF QUANTITIES
3	SITE PLAN AND PROJECT CONTROL PLAN
4	CONSTRUCTION PHASING PLAN
5	PHASE 1A AND 1B, AIRPORT ROAD CLOSURE DETAILS
6	PHASE 5, WEST ENTRANCE ROAD CLOSURE DETAILS
7	EXISTING CONDITIONS AND PROPOSED REMOVALS
8	EXISTING CONDITIONS AND PROPOSED REMOVALS - TERMINAL BUILDING
9	STORM WATER POLLUTION PREVENTION PLAN
10	STORM WATER POLLUTION PREVENTION PLAN DETAILS
11	PROJECT IMPROVEMENTS
12	TYPICAL SECTIONS
13	DRAINAGE AND UTILITY IMPROVEMENTS
14	GRADING PLAN
15	PAVEMENT MARKING PLAN
16	ELECTRICAL PLAN
17	STORM SEWER PROFILES - SHEET 1
18	STORM SEWER PROFILES - SHEET 2
19	PAVING DETAILS
20	FENCING DETAILS
21	DRAINAGE DETAILS
22	WATER MAIN DETAILS
23	ELECTRICAL DETAILS - SHEET 1
24	ELECTRICAL DETAILS - SHEET 2
25	TERMINAL BUILDING ELECTRICAL PLAN
26	ROADWAY SIGNAGE DETAILS
27	INFORMATION SIGN DETAILS
28	CLOSED CIRCUIT TELEVISION CAMERA DETAILS
29	CROSS SECTIONS - SHEET 1
30	CROSS SECTIONS - SHEET 2
31	ENGINEERING INFORMATION

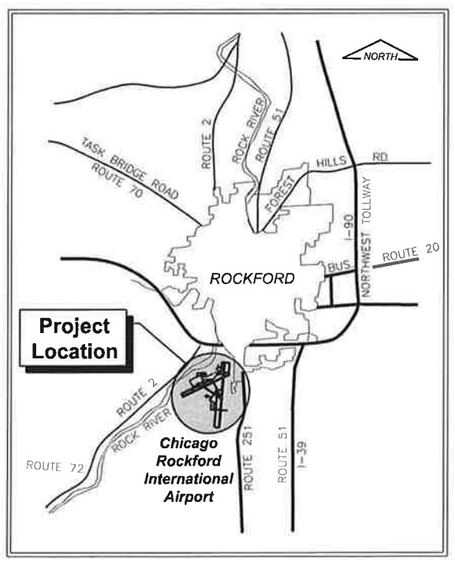

LOCATION MAP

SITE PLAN

Illinois Professional Engineering Practice Act of 1989

CMT
http://www.cmtengr.com

Springfield, Illinois
Aurora, Illinois
Rockford, Illinois
Chicago, Illinois
Peoria, Illinois
Edwardsville, Illinois
St. Louis, Missouri
Springfield, Missouri
Columbus, Ohio
Indianapolis, Indiana

SUBMITTED BY *Marc L. Katz, P.E.*

DATE July 6, 2012
license expires 11-30-2013

SUMMARY OF QUANTITIES

ITEM NUMBER	DESCRIPTION	UNIT	TOTAL QUANTITY	AS-BUILT QUANTITY
BASE BID				
AR106513	TYPE A AREA LIGHT POLE W/3 FIXTURES	EACH	7	
AR106514	TYPE A AREA LIGHT POLE W/4 FIXTURES	EACH	6	
AR106521	TYPE B AREA LIGHT POLE W/1 FIXTURE	EACH	5	
AR106905	REMOVE LIGHT POLE AND FIXTURE	EACH	5	
AR108086	1/C #6 XLP-USE	LF	9,660	
AR108090	1/C #10 XLP-USE	LF	6,090	
AR108756	1/C #6 GROUND	LF	2,415	
AR108760	1/C #10 GROUND	LF	3,045	
AR110117	1 1/2" PVC DUCT, DIRECT BURY	LF	1,225	
AR110203	3" PVC DUCT, DIRECT BURY	LF	1,800	
AR110217	1 1/2" STEEL DUCT, DIRECT BURY	LF	2,305	
AR110314	4" STEEL DUCT, JACKED	LF	1,190	
AR110610	ELECTRICAL HANDHOLE	EACH	10	
AR150510	ENGINEER'S FIELD OFFICE	LS	1	
AR150520	MOBILIZATION	LS	1	
AR151420	CLEARING TREES 0-2.5' BUTT. DIA.	EACH	2	
AR152410	UNCLASSIFIED EXCAVATION	CY	3,080	
AR152441	ON-SITE BORROW	CY	680	
AR152531	EXPLORATION TRENCH	LF	80	
AR152540	SOIL STABILIZATION FABRIC	SY	9,210	
AR156510	SILT FENCE	LF	310	
AR156511	DITCH CHECK	EACH	2	
AR156520	INLET PROTECTION	EACH	12	
AR162410	CLASS E FENCE, VINYL - 10'	LF	320	
AR162900	REMOVE CLASS E FENCE	LF	335	
AR201661	CLEAN & SEAL BITUMINOUS CRACKS	LF	1,415	
AR208515	POROUS GRANULAR EMBANKMENT	CY	175	
AR209608	CRUSHED AGG. BASE COURSE - 8"	SY	9,210	
AR401610	BITUMINOUS SURFACE COURSE	TON	1,110	
AR401915	REM & REP BIT PAVEMENT - TYPE A	SY	510	
AR401916	REM & REP BIT PAVEMENT - TYPE B	SY	120	
AR403610	BITUMINOUS BASE COURSE	TON	1,665	
AR501604	4" PCC SIDEWALK	SF	6,300	
AR501605	5" PCC SIDEWALK	SF	768	
AR501690	PCC SIDEWALK REMOVAL	SF	3,040	
AR602510	BITUMINOUS PRIME COAT	GAL	4,745	
AR603510	BITUMINOUS TACK COAT	GAL	1,425	
AR620520	PAVEMENT MARKING - WATERBORNE	SF	3,275	
AR620900	PAVEMENT MARKING REMOVAL	SF	1,000	
AR625510	TAR EMULSION SEAL COAT	SY	2,845	
AR701512	12" RCP, CLASS IV	LF	496	
AR701518	18" RCP, CLASS IV	LF	193	
AR701524	24" RCP, CLASS IV	LF	156	
AR701900	REMOVE PIPE	LF	153	
AR705526	6" PERFORATED UNDERDRAIN W/ SOCK	LF	195	
AR705944	ADJUST UNDERDRAIN CLEANOUT	EACH	1	
AR751560	MANHOLE 6'	EACH	8	
AR751903	REMOVE MANHOLE	EACH	1	
AR751927	REPLACE FRAME AND GRATE	EACH	1	
AR751943	ADJUST MANHOLE	EACH	1	
AR752412	PRECAST REINFORCED CONC. FES 12"	EACH	1	
AR752424	PRECAST REINFORCED CONC. FES 24"	EACH	2	
AR752900	REMOVE END SECTION	EACH	3	
AR754210	CONCRETE CURB	LF	430	
AR754410	COMB CONCRETE CURB & GUTTER	LF	1,475	
AR754900	REMOVE CONCRETE CURB	LF	60	
AR754904	REMOVE COMB CURB & GUTTER	LF	465	
AR760947	ADJUST WATER VALVE	EACH	6	
AR770945	ADJUST SANITARY MANHOLE	EACH	2	
AR800089	TERMINAL BUILDING MODIFICATIONS	LS	1	
AR800097	CCTV SECURITY SYSTEM UPGRADES	LS	1	
AR800111	TYPE 3 ROADWAY SIGN	EACH	1	
AR800121	6" DUCTILE IRON WATER MAIN LOWERING	EACH	2	
AR800122	8" DUCTILE IRON WATER MAIN LOWERING	EACH	1	
AR800123	16" DUCTILE IRON WATER MAIN LOWERING	EACH	1	
AR800178	FIBER OPTIC CABLE	LF	5,860	
AR902600	RELOCATE TREE	EACH	9	
AR904510	SODDING	SY	1,410	
AR910200	ROADWAY SIGNAGE	EACH	9	
AR910915	REMOVE ROADWAY SIGN	EACH	2	
ADDITIVE ALTERNATE #1 - INFORMATION SIGN				
AS108090	1/C #10 XLP-USE	LF	3,420	
AS108760	1/C #10 GROUND	LF	1,140	
AS110217	1 1/2" STEEL DUCT, DIRECT BURY	LF	480	
AS800089	TERMINAL BUILDING MODIFICATIONS	LS	1	
AS800098	INFORMATION SIGN	LS	1	
AS800178	FIBER OPTIC CABLE	LF	1,150	

IL. CONTRACT: **RO022**
IL. LETTING ITEM: **4A**
IL. PROJECT: **RFD-4187**
A.I.P. PROJECT:

SURVEY BOOK # 12258-02-00

REVISIONS

NUMBER	BY	DATE

0 1 2
THIS BAR IS EQUAL TO 2" AT FULL SCALE (34X22).

GREATER ROCKFORD AIRPORT AUTHORITY
CHICAGO ROCKFORD INTERNATIONAL AIRPORT
ROCKFORD, IL

EAST TERMINAL AUTO PARKING LOT, PHASE 1

SUMMARY OF QUANTITIES

© Copyright CMT, Inc.

CMT
CRAWFORD, MURPHY & TILLY, INC.
CONSULTING ENGINEERS
License No. 184-000613

DESIGN BY: MLK
DRAWN BY: CMT
CHECKED BY: MLK/SMS
APPROVED BY: DLP
DATE: 07/06/2012
JOB No: 12285-02-00/06

FINAL

SHEET 02 OF 31 SHEETS

XREF DWG: tb.dwg
tbcint.dwg
IMAGE FILES: RFD Airport logo-CMYK.jpg
UPDATE BY: Sean Smith
LAYOUT: SUMQTYS
DATE: Friday, July 06, 2012 13:20:18
FILE: K:\Rockford\12258-02_TermPkLotPH1\Draw\Sheets\SUMQTYS.dwg

LEGEND

- NEW PARKING LOT PAVEMENT
  5" BITUMINOUS SURFACE COURSE
  8" CRUSHED AGGREGATE BASE COURSE
- REHABILITATE EXISTING PARKING LOT PAVEMENT
  1.5" BITUMINOUS MILL AND REPLACEMENT
- NEW 4" PCC SIDEWALK
- EXISTING BUILDING
- AIRPORT PROPERTY LINE
- EXISTING ROAD RIGHT OF WAY
- CP#1 — EXISTING CONTROL POINT / BENCH MARK

VERTICAL CONTROL

BENCHMARK	DESCRIPTION	ELEVATION	NORTHING	EASTING
CP #1	P.K. NAIL	729.10	2018614.75	2587455.38
CP #2	P.K. NAIL	725.45	2018626.41	2587109.13
CP #3	CHISELED "X" ON CONCRETE RETAINING WALL	733.34	2018496.95	2587405.13
CP #4	ARROW BOLT ON FIRE HYDRANT	727.73	2018773.59	2587062.24

CONTROL NOTES

1. CONTRACTOR SHALL VERIFY ALL HORIZONTAL AND VERTICAL CONTROL POINTS BEFORE BEGINNING CONSTRUCTION
2. CONTROL POINTS PROVIDED WERE SET USING WIN GIS MONUMENTS LOCATED WITHIN CLOSE PROXIMITY TO SITE. WIN GIS MONUMENTS USED WERE THE FOLLOWING:

WIN GIS MONUMENT #	ELEVATION	NORTHING	EASTING
0070	694.62	2017519.78	2581776.60
0070A	697.81	2016390.54	2581115.92

GENERAL NOTES

1. THE NEW AND EXISTING PAVEMENT STRUCTURE WAS DESIGNED FOR EXCLUSIVE USE BY PASSENGER VEHICLES. THE CONTRACTOR SHALL TAKE THE NECESSARY PRECAUTIONS TO PROTECT THE PAVEMENT STRUCTURE AND SUBGRADE FROM DAMAGE, WHICH MAY INCLUDE BUT NOT BE LIMITED TO USE OF TRACKED EQUIPMENT, SHORT HAUL TRUCKS OR TRACKED PAVERS, AT NO ADDITIONAL COST TO CONTRACT.
2. AT ALL TIMES THE CONTRACTOR SHALL PERFORM ALL MAINTENANCE WORK NECESSARY TO KEEP EACH NEWLY CONSTRUCTED PAVEMENT SECTION LAYER IN A SATISFACTORY CONDITION.
3. THE CONTRACTOR SHALL BE RESPONSIBLE FOR ALL DAMAGE DONE BY HIS HAULING AND CONSTRUCTION EQUIPMENT. ANY WORK NECESSARY TO CORRECT DAMAGED WORK AND EXISTING PAVEMENT SHALL BE PERFORMED BY THE CONTRACTOR AND AT THE EXPENSE OF THE CONTRACTOR.

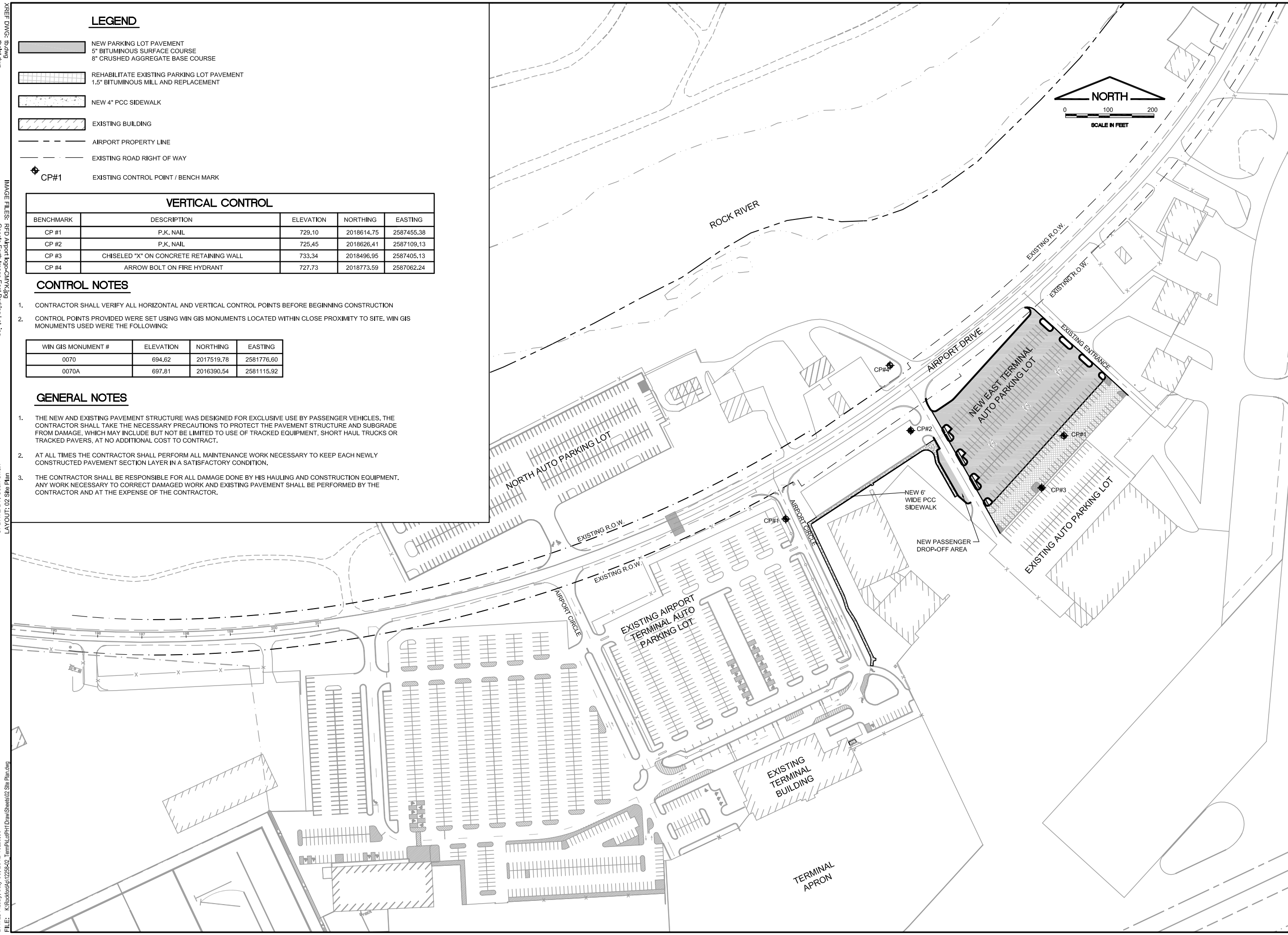

IL. CONTRACT: **RO022**
IL. LETTING ITEM: **4A**
IL. PROJECT: **RFD-4187**
A.I.P. PROJECT:

SURVEY BOOK # 12258-02-00

REVISIONS

NUMBER	BY	DATE

0 1 2
THIS BAR IS EQUAL TO 2" AT FULL SCALE (34X22).

CHICAGO ROCKFORD INTERNATIONAL AIRPORT
ROCKFORD, IL
EAST TERMINAL AUTO PARKING LOT, PHASE 1

SITE PLAN AND PROJECT CONTROL POINTS

© Copyright CMT, Inc.

CMT
CRAWFORD, MURPHY & TILLY, INC.
CONSULTING ENGINEERS
License No. 184-000613

DESIGN BY:	AAO
DRAWN BY:	CMT
CHECKED BY:	MLK/SMS
APPROVED BY:	DLP
DATE:	07/06/2012
JOB No:	12285-02-00/06

FINAL

SHEET 03 OF 31 SHEETS

XREF DWG: tb.dwg
tbdfrt.dwg
Rfd E Term Base.DWG
IMAGE FILES: RFD Airport logo-CMYK.jpg
Google Earth Image East Parking Lot .jpg
UPDATE BY: Sean Smith
LAYOUT: 02 Site Plan
DATE: Friday, July 06, 2012 13:20:59
FILE: K:\Rockford\p\12258-02_TermPlLotPH1\Draw\Sheets\02 Site Plan.dwg

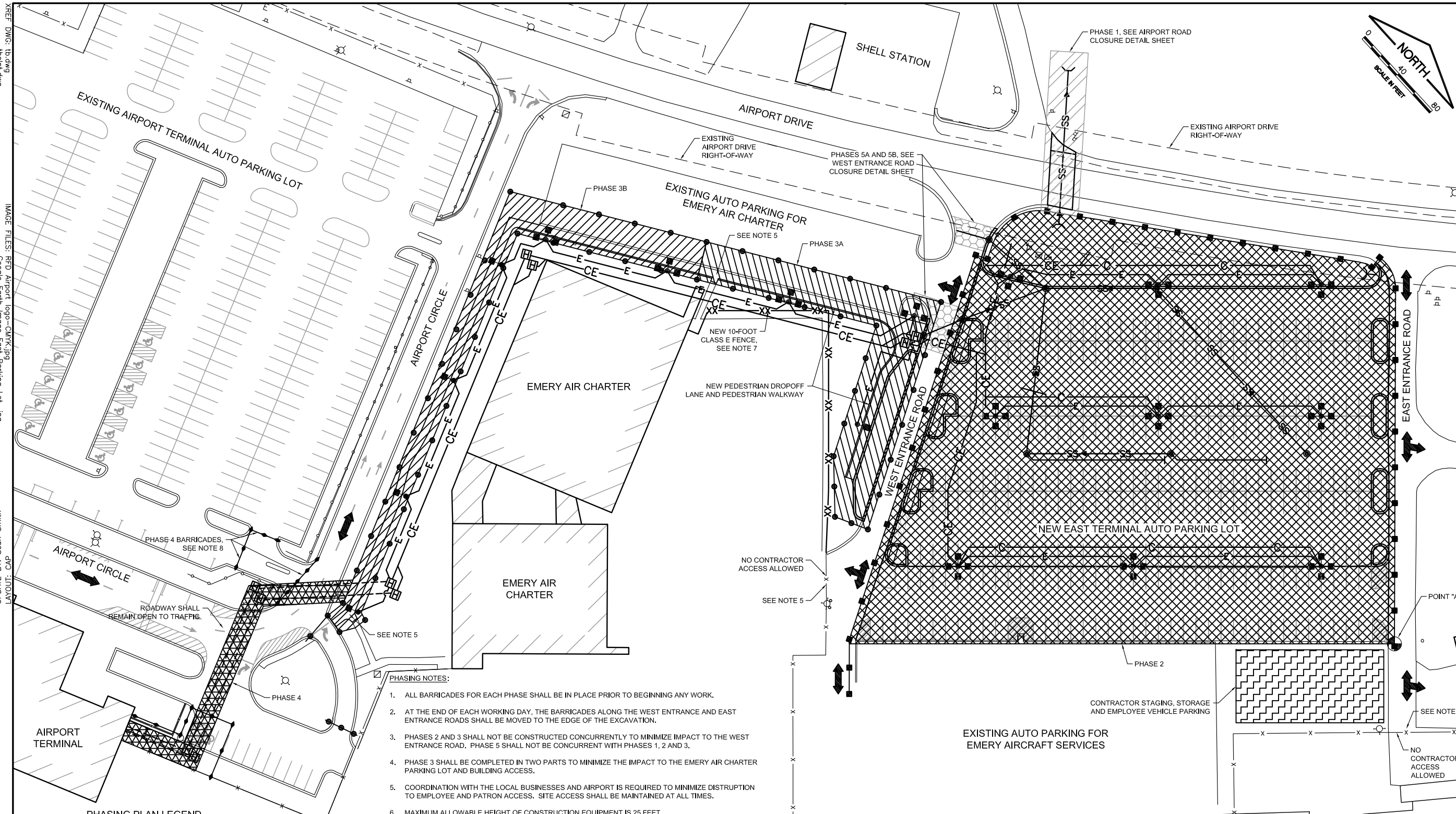

PHASING PLAN LEGEND

- AIRPORT ROAD R.O.W.
- PHASES 1A AND 1B, SEE AIRPORT ROAD CLOSURE DETAILS
- PHASE 2
- PHASES 3A & 3B
- PHASE 4
- PHASES 5A AND 5B, SEE WEST ENTRANCE ROAD CLOSURE DETAILS
- CONTRACTOR STAGING, STORAGE AND EMPLOYEE PARKING
- BARRICADE LINE - PHASE 2
- BARRICADE LINE - PHASES 3A & 3B
- BARRICADE LINE - PHASE 4
- CONTRACTOR AND PUBLIC ACCESS

PHASING NOTES:

1. ALL BARRICADES FOR EACH PHASE SHALL BE IN PLACE PRIOR TO BEGINNING ANY WORK.
2. AT THE END OF EACH WORKING DAY, THE BARRICADES ALONG THE WEST ENTRANCE AND EAST ENTRANCE ROADS SHALL BE MOVED TO THE EDGE OF THE EXCAVATION.
3. PHASES 2 AND 3 SHALL NOT BE CONSTRUCTED CONCURRENTLY TO MINIMIZE IMPACT TO THE WEST ENTRANCE ROAD. PHASE 5 SHALL NOT BE CONCURRENT WITH PHASES 1, 2 AND 3.
4. PHASE 3 SHALL BE COMPLETED IN TWO PARTS TO MINIMIZE THE IMPACT TO THE EMERY AIR CHARTER PARKING LOT AND BUILDING ACCESS.
5. COORDINATION WITH THE LOCAL BUSINESSES AND AIRPORT IS REQUIRED TO MINIMIZE DISTRUPTION TO EMPLOYEE AND PATRON ACCESS. SITE ACCESS SHALL BE MAINTAINED AT ALL TIMES.
6. MAXIMUM ALLOWABLE HEIGHT OF CONSTRUCTION EQUIPMENT IS 25 FEET.
7. NO GAPS SHALL BE LEFT UNATTENDED IN THE FENCELINE DURING FENCE REPLACEMENT OPERATIONS.
8. BARRICADES SHALL BE ALLOWED DURING WORKING HOURS ONLY WHILE DIRECTIONALLY BORING NEW ELECTRICAL CONDUITS. BARRICADES SHALL BE MOVED TO THE EDGE OF OPEN EXCAVATIONS AT THE END OF THE DAY.
9. AIRPORT CIRCLE SHALL REMAIN OPEN TO VEHICULAR TRAFFIC AT ALL TIMES.

SUGGESTED SEQUENCE OF WORK:

PHASE 1: REPLACE STORM SEWER ACROSS AIRPORT ROAD, INCLUDING WATERMAIN AND PAVEMENT REPLACEMENT AS REQUIRED. COORDINATE LANE CLOSURES WITH THE CITY, COUNTY AND TOWNSHIP ROAD DEPARTMENTS AS APPLICABLE. BARRICADES AND LANE CLOSURES SHALL BE IN ACCORDANCE WITH IDOT STANDARD 701501-06, URBAN LANE CLOSURE, 2-LANE, 2-WAY UNDIVIDED.

PHASE 2: CONSTRUCT EAST TERMINAL AUTO PARKING LOT, INCLUDING ALL EARTHWORK, UTILITY IMPROVEMENTS, LIGHTING, PAVEMENT AND CURB CONSTRUCTION, PAVEMENT MARKING AND LANDSCAPING.

PHASE 3: CONSTRUCT PASSENGER DROP OFF LANE AND PEDESTRIAN WALKWAY, INCLUDING EXISTING SIDEWALK REMOVAL, EARTHWORK, UTILITY AND DRAINAGE IMPROVEMENTS, LIGHTING, PAVEMENT AND CURB CONSTRUCTION, INSTALL 10-FOOT FENCE, PAVEMENT MARKING AND LANDSCAPING.

PHASE 4: INSTALL CONDUIT AND ELECTRICAL IMPROVEMENTS FOR NEW LIGHTING SYSTEM AND CONTROL, INCLUDING PAVEMENT REMOVAL AND REPLACEMENT, CONDUIT, WIRING AND LIGHTING.

PHASE 5: INSTALL STORM SEWER ACROSS WEST ENTRANCE ROAD AND REPLACE PAVEMENT AS REQUIRED.

AIRPORT AIRCRAFT APPROACH CATEGORY: D
AIRPORT DESIGN AIRCRAFT GROUP: V

CLOSEST POINT ON CONSTRUCTION SITE TO RUNWAY 19 THRESHOLD AND RUNWAY 25 THRESHOLD

POINT "A"
LATITUDE: 42° 12' 14.56655"
LONGITUDE: 89° 05' 33.13581"
GROUND ELEVATION + 25': 730' + 25' = 755'

IL. CONTRACT: **RO022**
IL. LETTING ITEM: **4A**
IL. PROJECT: **RFD-4187**
A.I.P. PROJECT:

SURVEY BOOK # 12258-02-00

REVISIONS		
NUMBER	BY	DATE

0 1 2
THIS BAR IS EQUAL TO 2" AT FULL SCALE (34X22).

GREATER ROCKFORD AIRPORT AUTHORITY
CHICAGO ROCKFORD INTERNATIONAL AIRPORT
ROCKFORD, IL

EAST TERMINAL AUTO PARKING LOT, PHASE 1

CONSTRUCTION PHASING PLAN

© Copyright CMT, Inc.

CMT
CRAWFORD, MURPHY & TILLY, INC.
CONSULTING ENGINEERS
License No. 184-000613

DESIGN BY:	SMS
DRAWN BY:	CMT
CHECKED BY:	MLK/SMS
APPROVED BY:	DLP
DATE:	07/06/2012
JOB No:	12285-02-00/06

FINAL

SHEET 04 OF 31 SHEETS

XREF DWG: tb.dwg tbcint.dwg Rtd E Term Base.DWG
IMAGE FILES: RFD Airport logo-CMYK.jpg Google Earth Image East Parking Lot .jpg
UPDATE BY: Sean Smith
LAYOUT: CAP
DATE: Friday, July 06, 2012 13:21:41
FILE: K:\Rockford\12258-02_TermPkLotPH1\Draw\Sheets\CAP.dwg

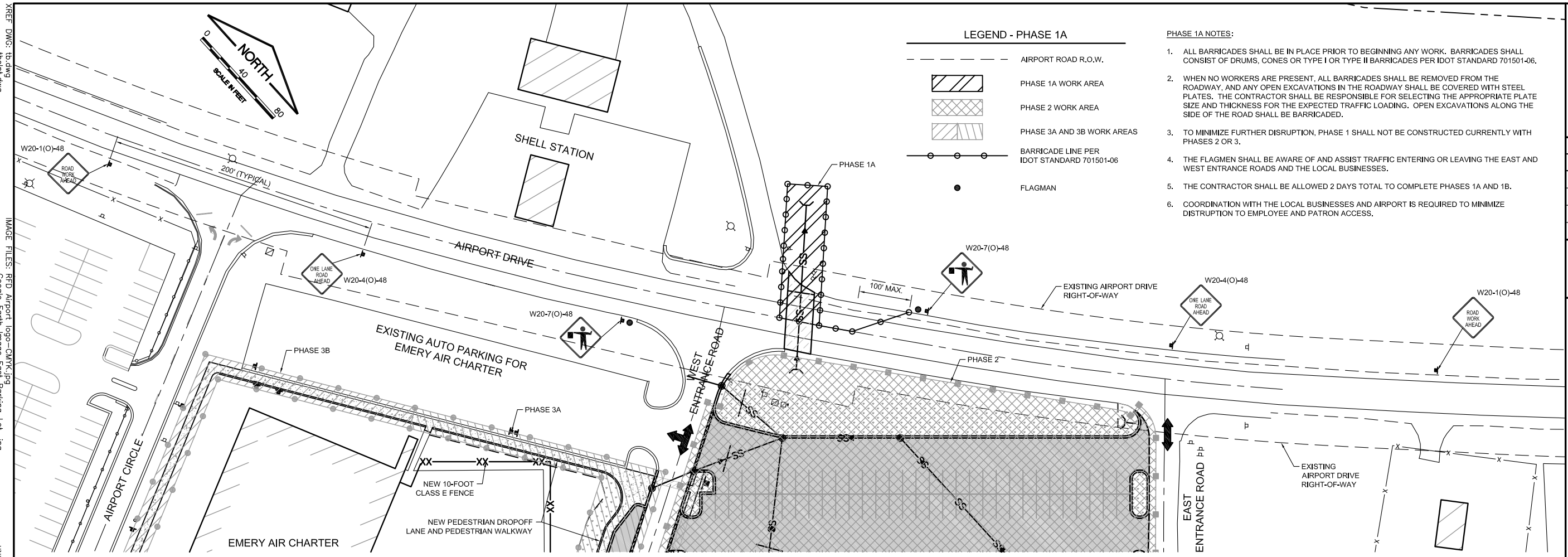

LEGEND - PHASE 1A

- AIRPORT ROAD R.O.W.
- PHASE 1A WORK AREA
- PHASE 2 WORK AREA
- PHASE 3A AND 3B WORK AREAS
- BARRICADE LINE PER IDOT STANDARD 701501-06
- FLAGMAN

PHASE 1A NOTES:

1. ALL BARRICADES SHALL BE IN PLACE PRIOR TO BEGINNING ANY WORK. BARRICADES SHALL CONSIST OF DRUMS, CONES OR TYPE I OR TYPE II BARRICADES PER IDOT STANDARD 701501-06.
2. WHEN NO WORKERS ARE PRESENT, ALL BARRICADES SHALL BE REMOVED FROM THE ROADWAY, AND ANY OPEN EXCAVATIONS IN THE ROADWAY SHALL BE COVERED WITH STEEL PLATES. THE CONTRACTOR SHALL BE RESPONSIBLE FOR SELECTING THE APPROPRIATE PLATE SIZE AND THICKNESS FOR THE EXPECTED TRAFFIC LOADING. OPEN EXCAVATIONS ALONG THE SIDE OF THE ROAD SHALL BE BARRICADED.
3. TO MINIMIZE FURTHER DISRUPTION, PHASE 1 SHALL NOT BE CONSTRUCTED CURRENTLY WITH PHASES 2 OR 3.
4. THE FLAGMEN SHALL BE AWARE OF AND ASSIST TRAFFIC ENTERING OR LEAVING THE EAST AND WEST ENTRANCE ROADS AND THE LOCAL BUSINESSES.
5. THE CONTRACTOR SHALL BE ALLOWED 2 DAYS TOTAL TO COMPLETE PHASES 1A AND 1B.
6. COORDINATION WITH THE LOCAL BUSINESSES AND AIRPORT IS REQUIRED TO MINIMIZE DISTRUPTION TO EMPLOYEE AND PATRON ACCESS.

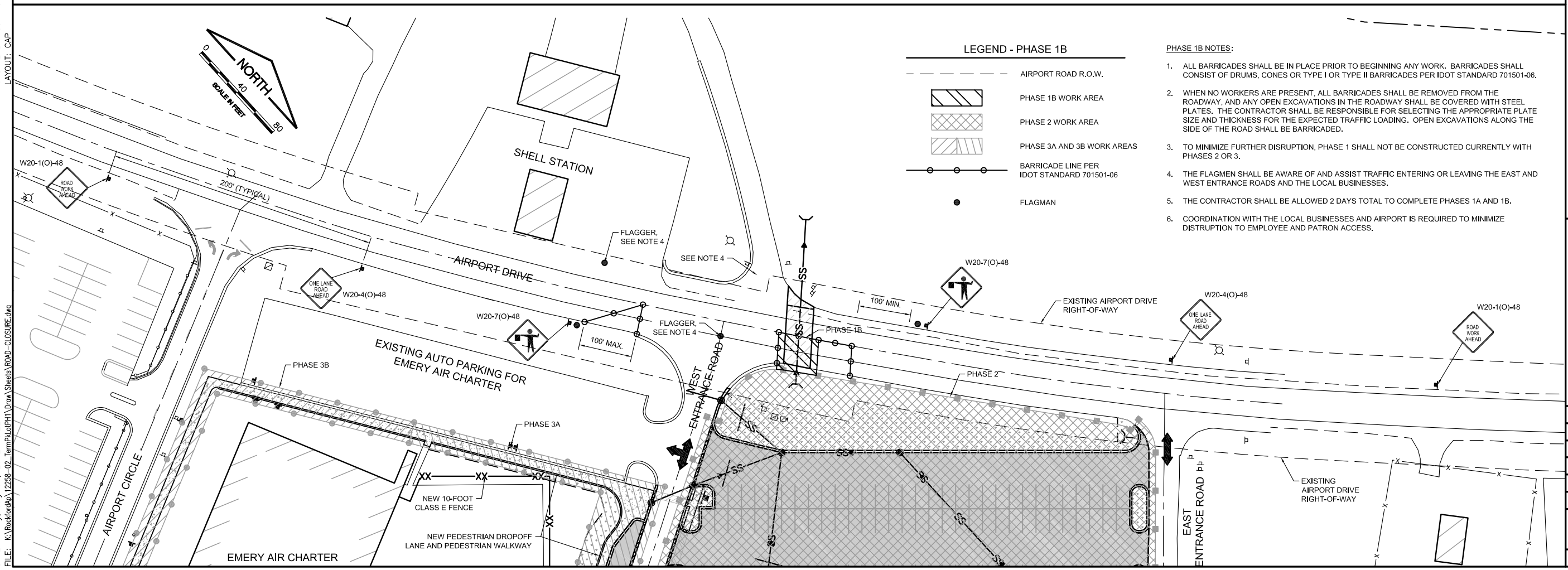

LEGEND - PHASE 1B

- AIRPORT ROAD R.O.W.
- PHASE 1B WORK AREA
- PHASE 2 WORK AREA
- PHASE 3A AND 3B WORK AREAS
- BARRICADE LINE PER IDOT STANDARD 701501-06
- FLAGMAN

PHASE 1B NOTES:

1. ALL BARRICADES SHALL BE IN PLACE PRIOR TO BEGINNING ANY WORK. BARRICADES SHALL CONSIST OF DRUMS, CONES OR TYPE I OR TYPE II BARRICADES PER IDOT STANDARD 701501-06.
2. WHEN NO WORKERS ARE PRESENT, ALL BARRICADES SHALL BE REMOVED FROM THE ROADWAY, AND ANY OPEN EXCAVATIONS IN THE ROADWAY SHALL BE COVERED WITH STEEL PLATES. THE CONTRACTOR SHALL BE RESPONSIBLE FOR SELECTING THE APPROPRIATE PLATE SIZE AND THICKNESS FOR THE EXPECTED TRAFFIC LOADING. OPEN EXCAVATIONS ALONG THE SIDE OF THE ROAD SHALL BE BARRICADED.
3. TO MINIMIZE FURTHER DISRUPTION, PHASE 1 SHALL NOT BE CONSTRUCTED CURRENTLY WITH PHASES 2 OR 3.
4. THE FLAGMEN SHALL BE AWARE OF AND ASSIST TRAFFIC ENTERING OR LEAVING THE EAST AND WEST ENTRANCE ROADS AND THE LOCAL BUSINESSES.
5. THE CONTRACTOR SHALL BE ALLOWED 2 DAYS TOTAL TO COMPLETE PHASES 1A AND 1B.
6. COORDINATION WITH THE LOCAL BUSINESSES AND AIRPORT IS REQUIRED TO MINIMIZE DISTRUPTION TO EMPLOYEE AND PATRON ACCESS.

IL. CONTRACT: **RO022**
IL. LETTING ITEM: **4A**
IL. PROJECT: **RFD-4187**
A.I.P. PROJECT:

SURVEY BOOK # 12258-02-00

REVISIONS

NUMBER	BY	DATE

0 1 2
THIS BAR IS EQUAL TO 2" AT FULL SCALE (34X22).

GREATER ROCKFORD AIRPORT AUTHORITY
CHICAGO ROCKFORD INTERNATIONAL AIRPORT
ROCKFORD, IL

EAST TERMINAL AUTO PARKING LOT, PHASE 1

PHASE 1A AND 1B AIRPORT ROAD CLOSURE DETAILS

© Copyright CMT, Inc.

CMT
CRAWFORD, MURPHY & TILLY, INC.
CONSULTING ENGINEERS
License No. 184-000613

DESIGN BY:	SMS
DRAWN BY:	CMT
CHECKED BY:	MLK/SMS
APPROVED BY:	DLP
DATE:	07/06/2012
JOB No:	12285-02-00/06

FINAL

SHEET 05 OF 31 SHEETS

XREF DWG: tb.dwg tbcint.dwg Rtd E Term Base.DWG
IMAGE FILES: RFD Airport logo-CMYK.jpg Google Earth Image East Parking Lot .jpg
UPDATE BY: Sean Smith
LAYOUT: CAP
DATE: Friday, July 06, 2012 13:22:44
FILE: K:\Rockford\12258-02_TermPh1\PH1\Draw\Sheets\ROAD-CLOSURE.dwg

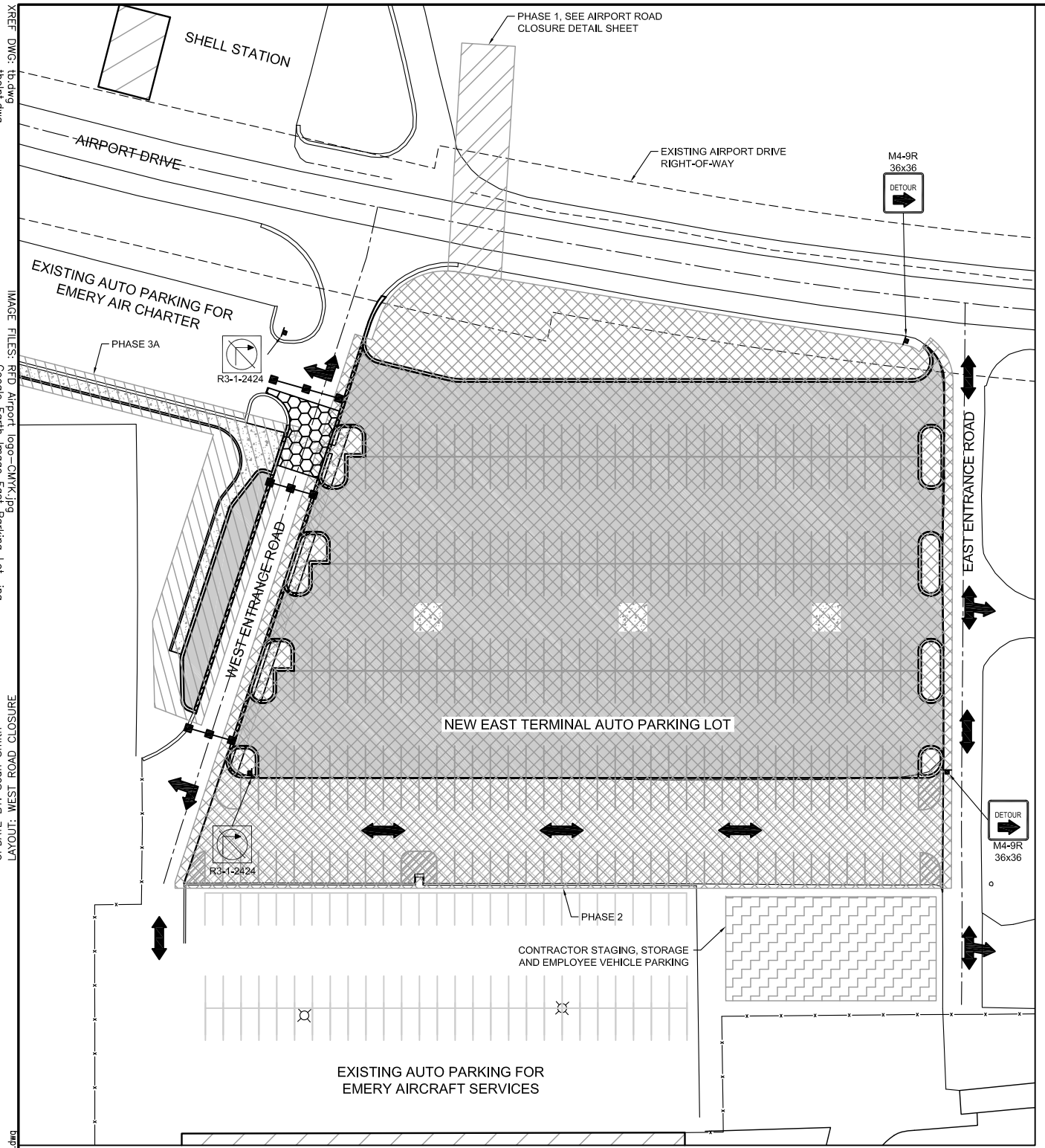

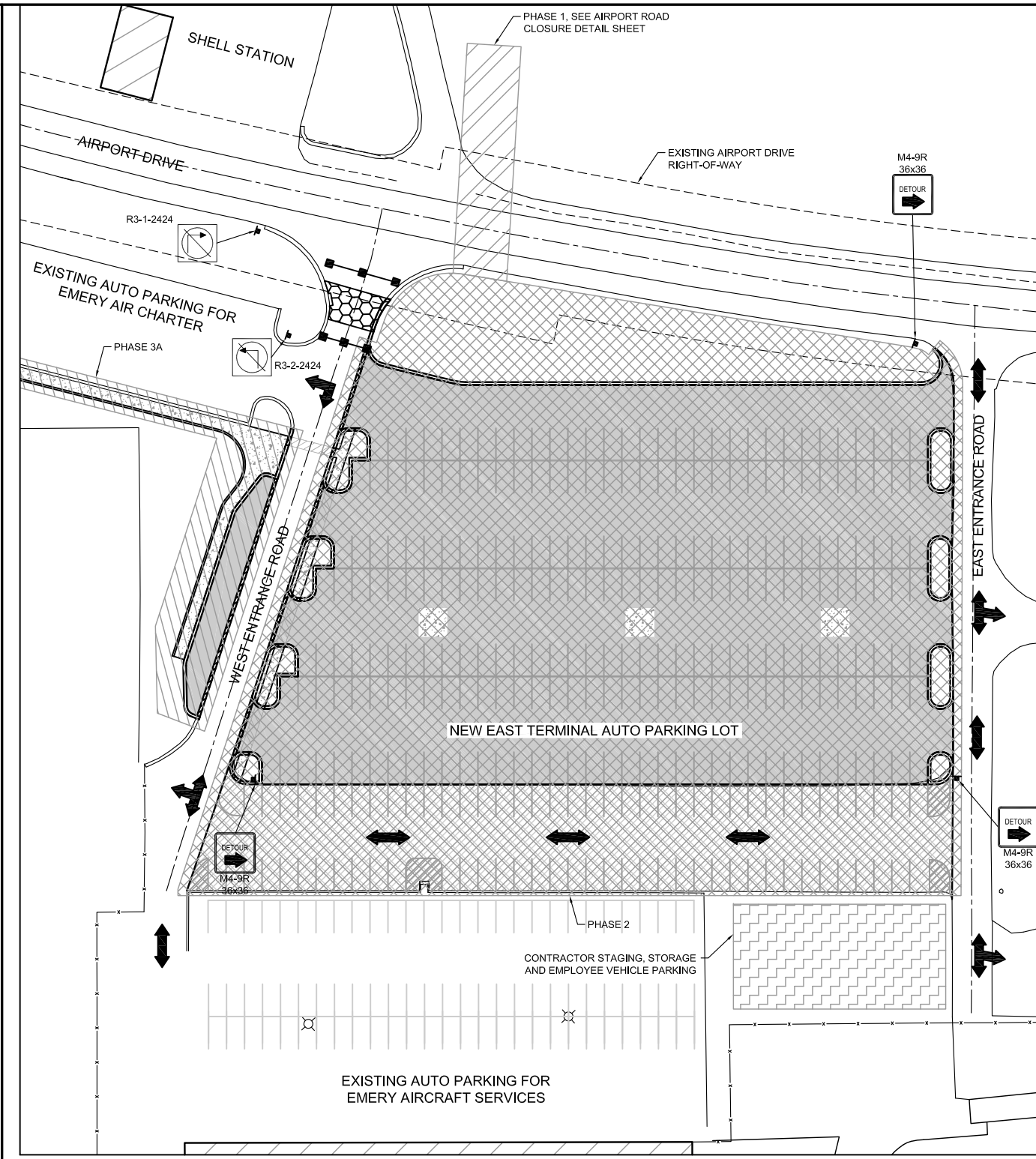

PHASE 5A NOTES:

1. ALL BARRICADES FOR EACH PHASE SHALL BE IN PLACE PRIOR TO BEGINNING ANY WORK.
2. THE CONTRACTOR SHALL COORDINATE THE CLOSURE OF THE WEST ENTRANCE ROAD WITH THE AIRPORT AND EMERY PRIOR TO BEGINNING WORK. AT A MINIMUM, THE CONTRACTOR SHALL POST ROAD CLOSED SIGNS AND DETOUR SIGNS TO DELINEATE THE ROUTE TRAFFIC SHALL TAKE TO ACCESS THE EMERY AIR CHARTER AND EMERY AIRCRAFT SERVICES PARKING AREAS.
3. TO MINIMIZE FURTHER DISRUPTION TO SITE ACCESS, PHASE 5A SHALL BE CONSTRUCTED INDEPENDENTLY FROM PHASES 1A, 1B, 2, 3A, 3B AND 5B.
4. SEE SHEET 4, CONSTRUCTION PHASING PLAN FOR PHASE 2, 3 AND 4 REQUIREMENTS.
5. SEE SHEET 5, PHASES 1A AND 1B AIRPORT ROAD CLOSURE DETAILS FOR PHASE 1 REQUIREMENTS.

LEGEND - PHASE 5A

- AIRPORT ROAD R.O.W.
- PHASE 1
- PHASE 2
- PHASE 3A
- PHASE 5A
- CONTRACTOR STAGING, STORAGE AND EMPLOYEE PARKING
- BARRICADE LINE - PHASE 5A
- CONTRACTOR AND PUBLIC ACCESS

PHASE 5B NOTES:

1. ALL BARRICADES FOR EACH PHASE SHALL BE IN PLACE PRIOR TO BEGINNING ANY WORK.
2. THE CONTRACTOR SHALL COORDINATE THE CLOSURE OF THE WEST ENTRANCE ROAD WITH THE AIRPORT AND EMERY PRIOR TO BEGINNING WORK. AT A MINIMUM, THE CONTRACTOR SHALL POST ROAD CLOSED SIGNS AND DETOUR SIGNS TO DELINEATE THE ROUTE TRAFFIC SHALL TAKE TO ACCESS THE EMERY AIR CHARTER AND EMERY AIRCRAFT SERVICES PARKING AREAS.
3. TO MINIMIZE FURTHER DISRUPTION TO SITE ACCESS, PHASE 5B SHALL BE CONSTRUCTED INDEPENDENTLY FROM PHASES 1A, 1B, 2, 3A, 3B AND 5A.
4. SEE SHEET 4, CONSTRUCTION PHASING PLAN FOR PHASE 2, 3 AND 4 REQUIREMENTS.
5. SEE SHEET 5, PHASES 1A AND 1B AIRPORT ROAD CLOSURE DETAILS FOR PHASE 1 REQUIREMENTS.

LEGEND - PHASE 5B

- AIRPORT ROAD R.O.W.
- PHASE 1
- PHASE 2
- PHASES 3A & 3B
- PHASE 5B
- CONTRACTOR STAGING, STORAGE AND EMPLOYEE PARKING
- BARRICADE LINE - PHASE 5A
- CONTRACTOR AND PUBLIC ACCESS

IL. CONTRACT: **RO022**
IL. LETTING ITEM: **4A**
IL. PROJECT: **RFD-4187**
A.I.P. PROJECT:

SURVEY BOOK # 12258-02-00

REVISIONS

NUMBER	BY	DATE

0 1 2
THIS BAR IS EQUAL TO 2" AT FULL SCALE (34X22).

GREATER ROCKFORD AIRPORT AUTHORITY
CHICAGO ROCKFORD INTERNATIONAL AIRPORT
ROCKFORD, IL

EAST TERMINAL AUTO PARKING LOT, PHASE 1

PHASE 5
WEST ENTRANCE ROAD CLOSURE DETAILS

© Copyright CMT, Inc.
CMT
CRAWFORD, MURPHY & TILLY, INC.
CONSULTING ENGINEERS
License No. 184-000613

DESIGN BY:	SMS
DRAWN BY:	CMT
CHECKED BY:	MLK/SMS
APPROVED BY:	DLP
DATE:	07/06/2012
JOB No:	12285-02-00/06

FINAL

SHEET 06 OF 31 SHEETS

XREF DWG: tb.dwg
tbcint.dwg
Rtd E Term Base.DWG
IMAGE FILES: RFD Airport logo-CMYK.jpg
Google Earth Image East Parking Lot .jpg
UPDATE BY: Sean Smith
LAYOUT: WEST ROAD CLOSURE
DATE: Friday, July 06, 2012 14:20:47
FILE: K:\Rockford\12258-02_TermPkLotPH1\Draw\Sheets\WEST ROAD CLOSURE.dwg

NOTES

1. THE EXISTING PAVEMENT TO BE REMOVED SHALL BE SAWED FULL DEPTH AROUND PERIMETER OF THE REMOVAL LIMITS. ALL SAWCUTS SHALL BE LAID OUT BY THE RESIDENT ENGINEER IN FIELD. COST OF SAWCUTTING AND DISPOSAL OF PAVEMENT SHALL BE CONSIDERED INCIDENTAL TO THE ITEM. ANY DAMAGE TO THE PAVEMENT BEYOND THE LIMITS AS SHOWN ON PLANS AND LAID OUT BY THE RESIDENT ENGINEER SHALL BE REMOVED AND REPLACED BY THE CONTRACTOR AT HIS EXPENSE. THESE AREAS SHALL BE SAWCUT TO A UNIFORM WIDTH.
2. SEE ENGINEERING INFORMATION SHEETS FOR BORING LOGS.
3. CONTRACTOR TO TAKE MEASURES TO PROTECT ALL UNDERGROUND UTILITIES WHICH ARE TO REMAIN UNDISTURBED FROM DAMAGE DUE TO CONSTRUCTION EQUIPMENT. ANY DAMAGED UTILITIES SHALL BE REPLACED IN KIND AT NO EXTRA COST TO THE CONTRACT.
4. CONTRACTOR SHALL RELOCATE TREES PER PLAN TO A SITE WITHIN PROJECT LIMITS AND AS DESIGNATED BY THE RESIDENT ENGINEER.
5. EXISTING COMMERCIAL SIGN, ALONG WITH ASSOCIATED ELECTRIC METER, TO REMAIN UNDISTURBED. CONTRACTOR SHALL PROTECT SIGN AND ALL ASSOCIATED ITEMS FROM DAMAGE INCLUDING, BUT NOT LIMITED TO, EXISTING CONCRETE FOUNDATION, ELECTRICAL METER AND ELECTRICAL LINES. UPON COMPLETION OF PROJECT, THE CONTRACTOR SHALL ENSURE SIGN WORKS PROPERLY. NO EXTRA COMPENSATION WILL BE MADE FOR WORK NEEDED TO FIX DAMAGE DONE DUE TO CONSTRUCTION.
6. REMOVAL OF EXISTING 3" SERVICE ENTRANCE CONDUIT AND AREA LIGHTING CONTROL BOX WITH ELECTRIC METER SHALL BE CONSIDERED INCIDENTAL TO LIGHT POLE REMOVALS.
7. CONTROLLED LOW STRENGTH MATERIAL (CLSM) SHALL BE USED TO BACKFILL ALL TRENCHES RESULTING FROM UTILITY PLACEMENT OR REMOVAL ACROSS AIRPORT DRIVE AND THE WEST ENTRANCE ROAD. CLSM SHALL BE CONSIDERED INCIDENTAL TO THE ITEM TO WHICH IT APPLIES.
8. BITUMINOUS CRACKS TO BE SEALED TO BE COORDINATED IN FIELD WITH RESIDENT ENGINEER.
9. ITEMS REMOVED DUE TO PROPOSED PAVEMENT REMOVAL OR EXCAVATION WILL NOT BE PAID FOR SEPARATELY BUT WILL BE CONSIDERED INCIDENTAL TO UNCLASSIFIED EXCAVATION UNLESS OTHERWISE NOTED ON THE PLANS.

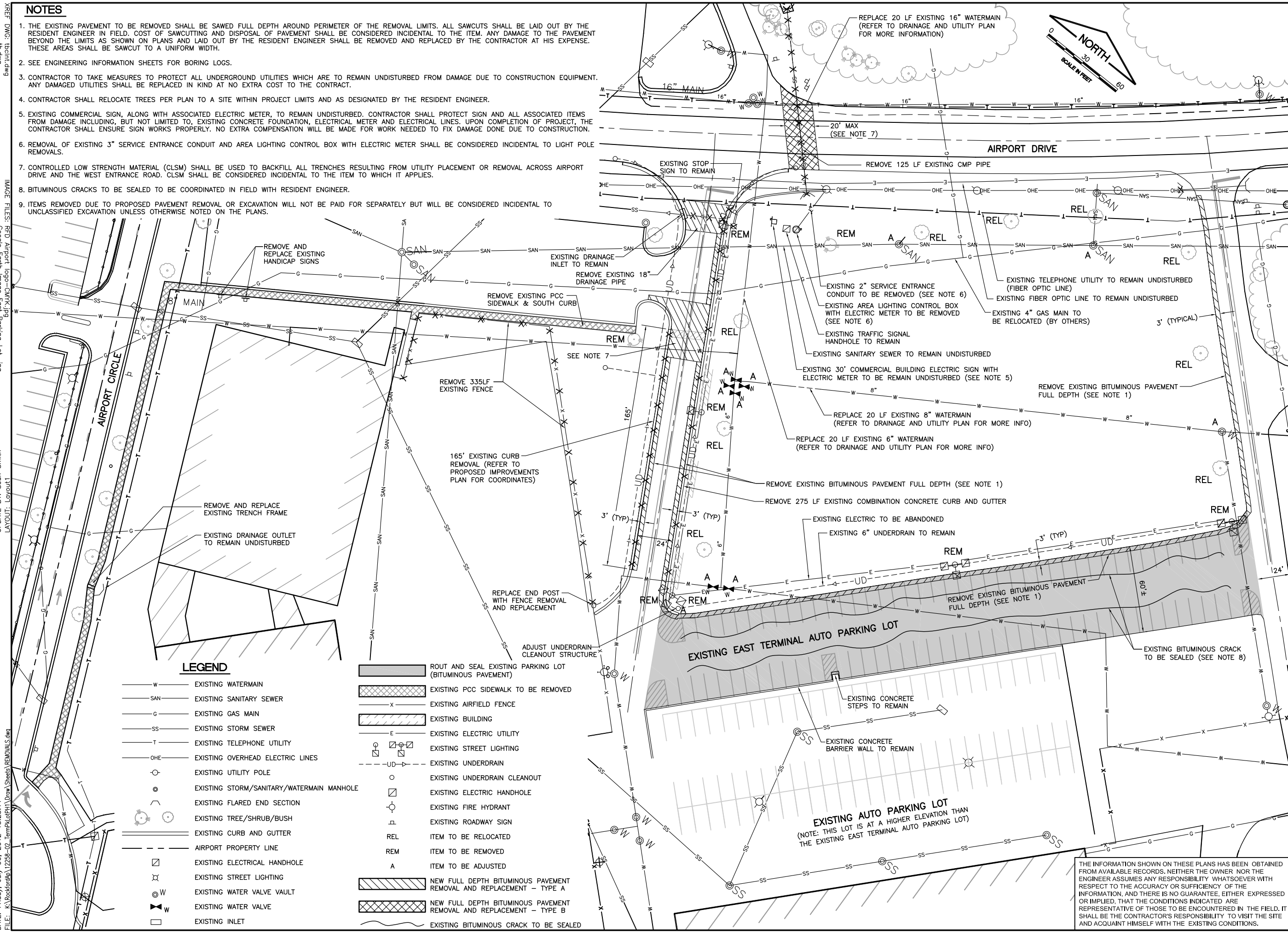

LEGEND

W	EXISTING WATERMAIN
SAN	EXISTING SANITARY SEWER
G	EXISTING GAS MAIN
SS	EXISTING STORM SEWER
T	EXISTING TELEPHONE UTILITY
OHE	EXISTING OVERHEAD ELECTRIC LINES
	EXISTING UTILITY POLE
	EXISTING STORM/SANITARY/WATERMAIN MANHOLE
	EXISTING FLARED END SECTION
	EXISTING TREE/SHRUB/BUSH
	EXISTING CURB AND GUTTER
	AIRPORT PROPERTY LINE
	EXISTING ELECTRICAL HANDHOLE
	EXISTING STREET LIGHTING
W	EXISTING WATER VALVE VAULT
W	EXISTING WATER VALVE
	EXISTING INLET
	ROUT AND SEAL EXISTING PARKING LOT (BITUMINOUS PAVEMENT)
	EXISTING PCC SIDEWALK TO BE REMOVED
X	EXISTING AIRFIELD FENCE
	EXISTING BUILDING
E	EXISTING ELECTRIC UTILITY
	EXISTING STREET LIGHTING
UD	EXISTING UNDERDRAIN
	EXISTING UNDERDRAIN CLEANOUT
	EXISTING ELECTRIC HANDHOLE
	EXISTING FIRE HYDRANT
	EXISTING ROADWAY SIGN
REL	ITEM TO BE RELOCATED
REM	ITEM TO BE REMOVED
A	ITEM TO BE ADJUSTED
	NEW FULL DEPTH BITUMINOUS PAVEMENT REMOVAL AND REPLACEMENT – TYPE A
	NEW FULL DEPTH BITUMINOUS PAVEMENT REMOVAL AND REPLACEMENT – TYPE B
	EXISTING BITUMINOUS CRACK TO BE SEALED

THE INFORMATION SHOWN ON THESE PLANS HAS BEEN OBTAINED FROM AVAILABLE RECORDS. NEITHER THE OWNER NOR THE ENGINEER ASSUMES ANY RESPONSIBILITY WHATSOEVER WITH RESPECT TO THE ACCURACY OR SUFFICIENCY OF THE INFORMATION, AND THERE IS NO GUARANTEE, EITHER EXPRESSED OR IMPLIED, THAT THE CONDITIONS INDICATED ARE REPRESENTATIVE OF THOSE TO BE ENCOUNTERED IN THE FIELD. IT SHALL BE THE CONTRACTOR'S RESPONSIBILITY TO VISIT THE SITE AND ACQUAINT HIMSELF WITH THE EXISTING CONDITIONS.

IL. CONTRACT: **RO022**
IL. LETTING ITEM: **4A**
IL. PROJECT: **RFD-4187**
A.I.P. PROJECT:

SURVEY BOOK # 12258-02-00

REVISIONS		
NUMBER	BY	DATE

0 1 2
THIS BAR IS EQUAL TO 2" AT FULL SCALE (34X22).

CHICAGO ROCKFORD INTERNATIONAL AIRPORT
ROCKFORD, IL
EAST TERMINAL AUTO PARKING LOT, PHASE 1

EXISTING CONDITIONS AND PROPOSED REMOVALS

© Copyright CMT, Inc.

CMT
CRAWFORD, MURPHY & TILLY, INC.
CONSULTING ENGINEERS
License No. 184-000613

DESIGN BY:	AAO/MLK
DRAWN BY:	CMT
CHECKED BY:	MLK/SMS
APPROVED BY:	DLP
DATE:	07/06/2012
JOB No:	12285-02-00/06

FINAL

SHEET 07 OF 31 SHEETS

XREF DWG: tbcint.dwg tb.dwg Rtd E Term Base.DWG
IMAGE FILES: RFD Airport logo-CMYK.jpg Google Earth Image East Parking Lot .jpg
UPDATE BY: Sean Smith
LAYOUT: Layout1
DATE: Friday, July 06, 2012 13:25:11
FILE: K:\Rockford\12258-02_TermPkLotPH1\Draw\Sheets\REMOVALS.dwg

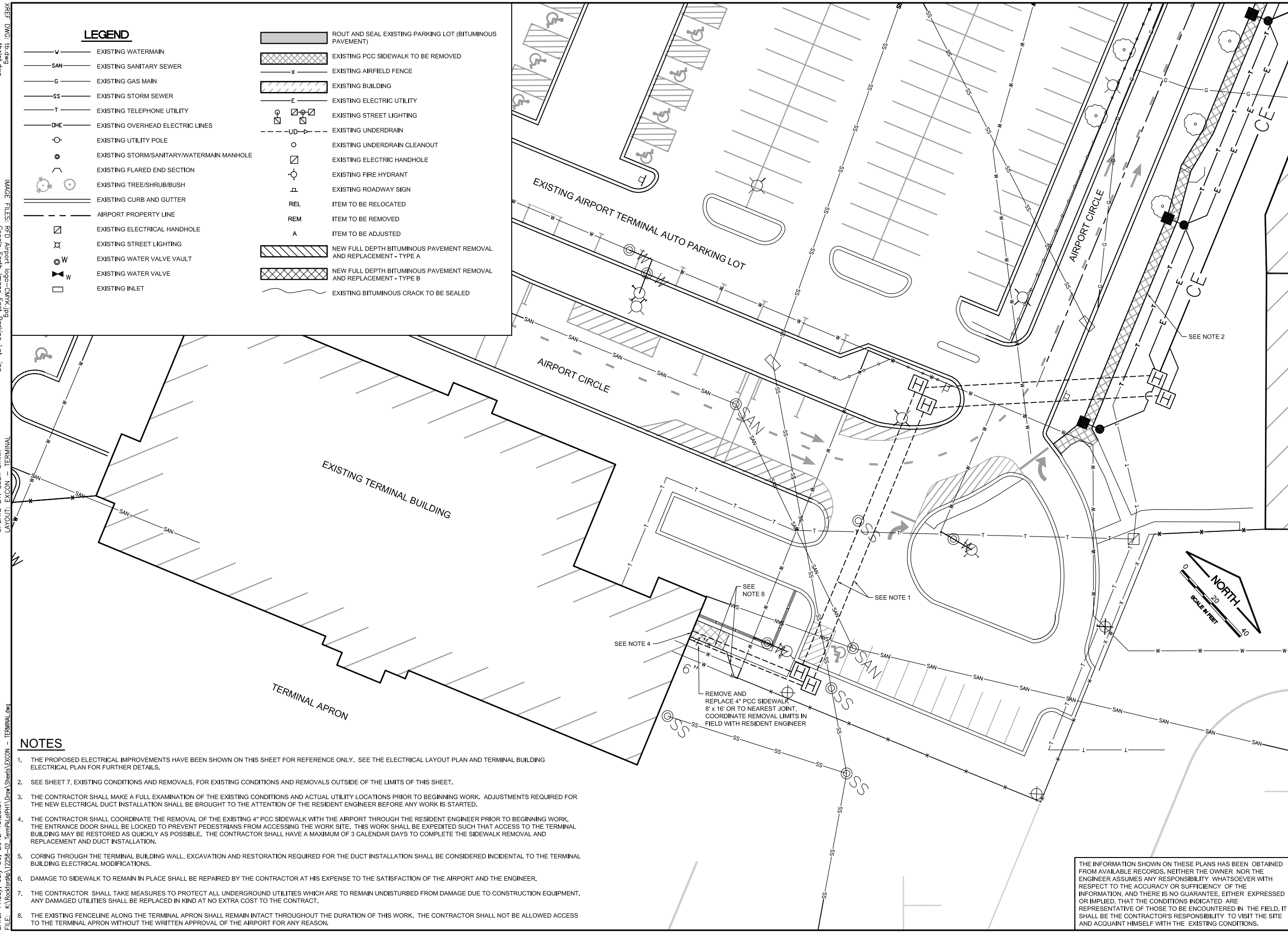

LEGEND

- EXISTING WATERMAIN
- EXISTING SANITARY SEWER
- EXISTING GAS MAIN
- EXISTING STORM SEWER
- EXISTING TELEPHONE UTILITY
- EXISTING OVERHEAD ELECTRIC LINES
- EXISTING UTILITY POLE
- EXISTING STORM/SANITARY/WATERMAIN MANHOLE
- EXISTING FLARED END SECTION
- EXISTING TREE/SHRUB/BUSH
- EXISTING CURB AND GUTTER
- AIRPORT PROPERTY LINE
- EXISTING ELECTRICAL HANDHOLE
- EXISTING STREET LIGHTING
- EXISTING WATER VALVE VAULT
- EXISTING WATER VALVE
- EXISTING INLET
- ROUT AND SEAL EXISTING PARKING LOT (BITUMINOUS PAVEMENT)
- EXISTING PCC SIDEWALK TO BE REMOVED
- EXISTING AIRFIELD FENCE
- EXISTING BUILDING
- EXISTING ELECTRIC UTILITY
- EXISTING STREET LIGHTING
- EXISTING UNDERDRAIN
- EXISTING UNDERDRAIN CLEANOUT
- EXISTING ELECTRIC HANDHOLE
- EXISTING FIRE HYDRANT
- EXISTING ROADWAY SIGN
- REL — ITEM TO BE RELOCATED
- REM — ITEM TO BE REMOVED
- A — ITEM TO BE ADJUSTED
- NEW FULL DEPTH BITUMINOUS PAVEMENT REMOVAL AND REPLACEMENT - TYPE A
- NEW FULL DEPTH BITUMINOUS PAVEMENT REMOVAL AND REPLACEMENT - TYPE B
- EXISTING BITUMINOUS CRACK TO BE SEALED

NOTES

1. THE PROPOSED ELECTRICAL IMPROVEMENTS HAVE BEEN SHOWN ON THIS SHEET FOR REFERENCE ONLY. SEE THE ELECTRICAL LAYOUT PLAN AND TERMINAL BUILDING ELECTRICAL PLAN FOR FURTHER DETAILS.
2. SEE SHEET 7, EXISTING CONDITIONS AND REMOVALS, FOR EXISTING CONDITIONS AND REMOVALS OUTSIDE OF THE LIMITS OF THIS SHEET.
3. THE CONTRACTOR SHALL MAKE A FULL EXAMINATION OF THE EXISTING CONDITIONS AND ACTUAL UTILITY LOCATIONS PRIOR TO BEGINNING WORK. ADJUSTMENTS REQUIRED FOR THE NEW ELECTRICAL DUCT INSTALLATION SHALL BE BROUGHT TO THE ATTENTION OF THE RESIDENT ENGINEER BEFORE ANY WORK IS STARTED.
4. THE CONTRACTOR SHALL COORDINATE THE REMOVAL OF THE EXISTING 4" PCC SIDEWALK WITH THE AIRPORT THROUGH THE RESIDENT ENGINEER PRIOR TO BEGINNING WORK. THE ENTRANCE DOOR SHALL BE LOCKED TO PREVENT PEDESTRIANS FROM ACCESSING THE WORK SITE. THIS WORK SHALL BE EXPEDITED SUCH THAT ACCESS TO THE TERMINAL BUILDING MAY BE RESTORED AS QUICKLY AS POSSIBLE. THE CONTRACTOR SHALL HAVE A MAXIMUM OF 3 CALENDAR DAYS TO COMPLETE THE SIDEWALK REMOVAL AND REPLACEMENT AND DUCT INSTALLATION.
5. CORING THROUGH THE TERMINAL BUILDING WALL, EXCAVATION AND RESTORATION REQUIRED FOR THE DUCT INSTALLATION SHALL BE CONSIDERED INCIDENTAL TO THE TERMINAL BUILDING ELECTRICAL MODIFICATIONS.
6. DAMAGE TO SIDEWALK TO REMAIN IN PLACE SHALL BE REPAIRED BY THE CONTRACTOR AT HIS EXPENSE TO THE SATISFACTION OF THE AIRPORT AND THE ENGINEER.
7. THE CONTRACTOR SHALL TAKE MEASURES TO PROTECT ALL UNDERGROUND UTILITIES WHICH ARE TO REMAIN UNDISTURBED FROM DAMAGE DUE TO CONSTRUCTION EQUIPMENT. ANY DAMAGED UTILITIES SHALL BE REPLACED IN KIND AT NO EXTRA COST TO THE CONTRACT.
8. THE EXISTING FENCELINE ALONG THE TERMINAL APRON SHALL REMAIN INTACT THROUGHOUT THE DURATION OF THIS WORK. THE CONTRACTOR SHALL NOT BE ALLOWED ACCESS TO THE TERMINAL APRON WITHOUT THE WRITTEN APPROVAL OF THE AIRPORT FOR ANY REASON.

THE INFORMATION SHOWN ON THESE PLANS HAS BEEN OBTAINED FROM AVAILABLE RECORDS. NEITHER THE OWNER NOR THE ENGINEER ASSUMES ANY RESPONSIBILITY WHATSOEVER WITH RESPECT TO THE ACCURACY OR SUFFICIENCY OF THE INFORMATION, AND THERE IS NO GUARANTEE, EITHER EXPRESSED OR IMPLIED, THAT THE CONDITIONS INDICATED ARE REPRESENTATIVE OF THOSE TO BE ENCOUNTERED IN THE FIELD. IT SHALL BE THE CONTRACTOR'S RESPONSIBILITY TO VISIT THE SITE AND ACQUAINT HIMSELF WITH THE EXISTING CONDITIONS.

IL. CONTRACT: **RO022**
IL. LETTING ITEM: **4A**
IL. PROJECT: **RFD-4187**
A.I.P. PROJECT:

SURVEY BOOK # 12258-02-00

REVISIONS		
NUMBER	BY	DATE

0 1 2
THIS BAR IS EQUAL TO 2" AT FULL SCALE (34X22).

GREATER ROCKFORD AIRPORT AUTHORITY
CHICAGO ROCKFORD INTERNATIONAL AIRPORT
ROCKFORD, IL

EAST TERMINAL AUTO PARKING LOT, PHASE 1

EXISTING CONDITIONS AND PROPOSED REMOVALS TERMINAL BUILDING

© Copyright CMT, Inc.

CMT
CRAWFORD, MURPHY & TILLY, INC.
CONSULTING ENGINEERS
License No. 184-000613

DESIGN BY:	AB/SMS
DRAWN BY:	CMT
CHECKED BY:	MLK/SMS
APPROVED BY:	DLP
DATE:	07/06/2012
JOB No:	12285-02-00/06

FINAL

SHEET 08 OF 31 SHEETS

XREF DWG: tb.dwg tbcint.dwg Rtd E Term Base.DWG
IMAGE FILES: RFD Airport logo-CMYK.jpg Google Earth Image East Parking Lot .jpg
UPDATE BY: Sean Smith
LAYOUT: EXCON - TERMINAL
DATE: Friday, July 06, 2012 13:25:57
FILE: K:\Rockford\12258-02_TermPkLotPH1\Draw\Sheets\EXCON - TERMINAL.dwg

LEGEND

- NEW PARKING LOT/PASSENGER DROP-OFF PAVEMENT
- NEW STORM SEWER
- NEW STORM SEWER STRUCTURE
- EXISTING WATERMAIN
- EXISTING SANITARY SEWER
- EXISTING GAS MAIN
- EXISTING STORM SEWER
- EXISTING TELEPHONE UTILITY
- EXISTING OVERHEAD ELECTRIC LINES
- EXISTING UTILITY POLE
- EXISTING STORM/SANITARY/WATERMAIN MANHOLE
- EXISTING FLARED END SECTION
- EXISTING TREE/SHRUB/BUSH
- EXISTING CURB AND GUTTER
- AIRPORT PROPERTY LINE
- EXISTING ELECTRICAL HANDHOLE
- EXISTING STREET LIGHTING
- EXISTING WATER VALVE
- EXISTING AIRFIELD FENCE
- EXISTING BUILDING
- EXISTING ELECTRIC UTILITY
- EXISTING UNDERDRAIN
- EXISTING ELECTRIC HANDHOLE
- EXISTING FIRE HYDRANT
- EXISTING ROADWAY SIGN
- EXISTING UNDERDRAIN CLEANOUT
- EXISTING INLET
- NEW SODDING
- RESTORATION INCIDENTAL TO SIDEWALK AND DUCT
- NEW SILT FENCE
- NEW INLET PROTECTION
- NEW BALE DITCH CHECK
- EXISTING FENCE
- NEW FENCE
- LIMITS OF GRADING
- FLOWLINE
- RELOCATED TREE
- STONE CONSTRUCTION ENTRANCE

STORMWATER POLLUTION PREVENTION NOTES:

1. ALL EROSION CONTROL MEASURES SHALL BE IN PLACE PRIOR TO BEGINNING EARTHWORK OPERATIONS.
2. AS NEW STORM STRUCTURES ARE INSTALLED, INLET PROTECTIONS SHALL BE INSTALLED TO PREVENT SILTATION FROM FUTURE EROSION EVENTS.
3. STONE CONSTRUCTION ENTRANCES SHALL BE INSTALLED AT INGRESS AND EGRESS POINTS TO PREVENT TRACKING ONTO PUBLIC ROADS.
4. AREAS DISTURBED BY GRADING OPERATIONS SHALL HAVE A 4-INCH LAYER OF TOPSOIL SPREAD OVER THE DISTURBED AREA AND SODDED, TO BE PAID UNDER AR152410 UNCLASSIFIED EXCAVATION AND AR904510 SODDING.
5. AREAS DISTURBED BY SIDEWALK CONSTRUCTION AND ELECTRICAL DUCT INSTALLATION SHALL BE RESTORED TO THE SATISFACTION OF THE ENGINEER. THESE AREAS SHALL BE TOPSOILED AND SEEDED, COST INCIDENTAL TO AR501604 4" PCC SIDEWALK AND THE ELECTRICAL DUCT ITEMS.

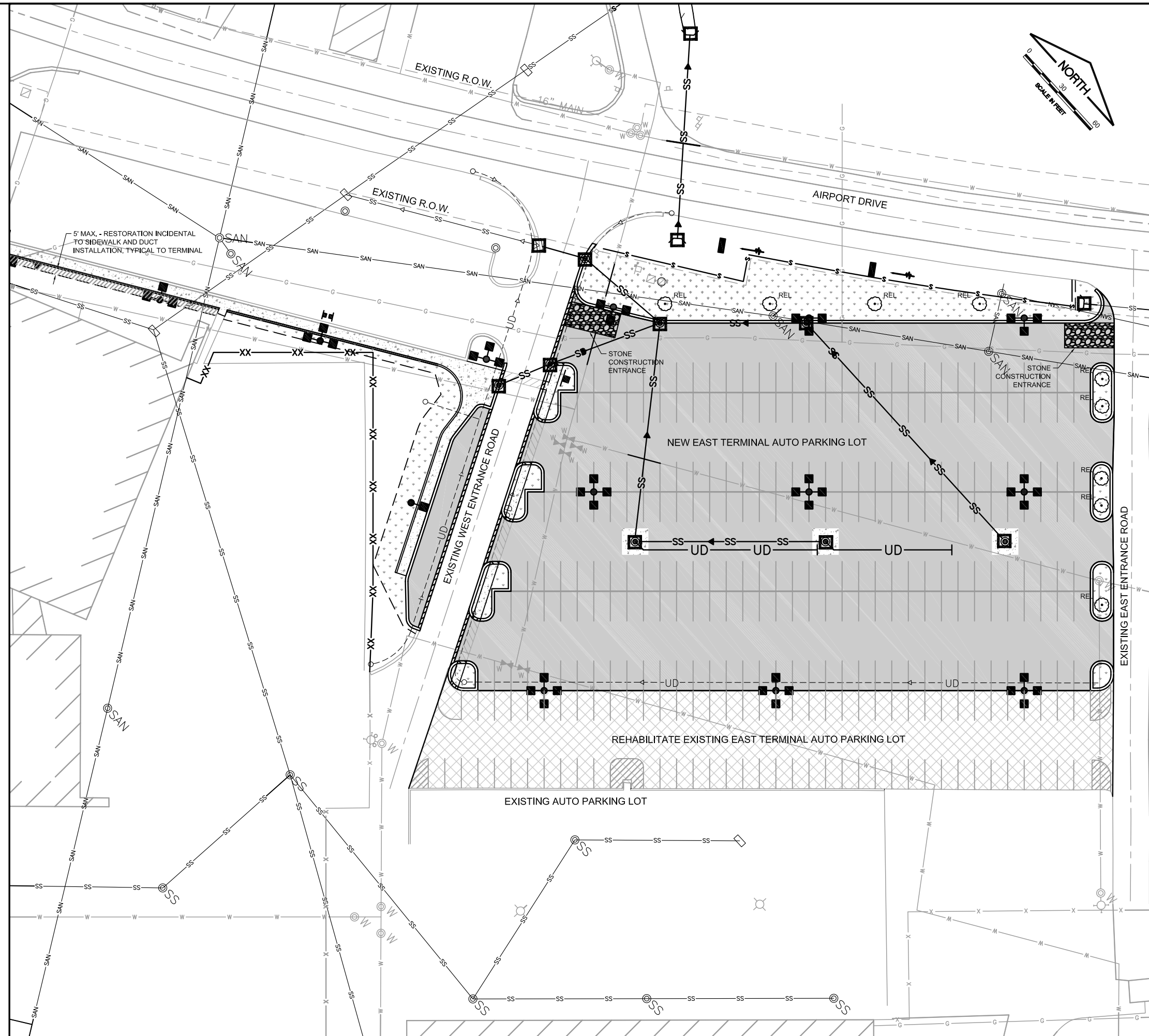

IL. CONTRACT: **RO022**
IL. LETTING ITEM: **4A**
IL. PROJECT: **RFD-4187**
A.I.P. PROJECT:

SURVEY BOOK # 12258-02-00

REVISIONS

NUMBER	BY	DATE

0 1 2
THIS BAR IS EQUAL TO 2" AT FULL SCALE (34X22).

GREATER ROCKFORD AIRPORT AUTHORITY
CHICAGO ROCKFORD INTERNATIONAL AIRPORT
ROCKFORD, IL

EAST TERMINAL AUTO PARKING LOT, PHASE 1

STORM WATER POLLUTION PREVENTION PLAN

© Copyright CMT, Inc.

CMT
CRAWFORD, MURPHY & TILLY, INC.
CONSULTING ENGINEERS
License No. 184-000613

DESIGN BY:	AAO
DRAWN BY:	CMT
CHECKED BY:	MLK/SMS
APPROVED BY:	DLP
DATE:	07/06/2012
JOB No:	12285-02-00/06

FINAL

SHEET 09 OF 31 SHEETS

XREF DWG: tb.dwg
tbdint.dwg
IMAGE FILES: RFD Airport logo-CMYK.jpg
Google Earth Image East Parking Lot .jpg
UPDATE BY: Sean Smith
LAYOUT: SWPPP
DATE: Friday, July 06, 2012 13:26:45
FILE: K:\Rockford\Ap\12258-02_TermPkLot\PH1\Draw\Sheets\SWPPP.dwg

STORM WATER POLLUTION PREVENTION PLAN

THE FOLLOWING PLAN IS ESTABLISHED AND INCORPORATED IN THE PROJECT TO DIRECT THE CONTRACTOR IN THE PLACEMENT OF TEMPORARY EROSION CONTROL SYSTEMS AND TO PROVIDE A STORM WATER POLLUTION PREVENTION PLAN FOR COMPLIANCE WITH NPDES.

THE PURPOSE OF THIS PLAN IS TO MINIMIZE EROSION WITHIN THE CONSTRUCTION SITE AND TO LIMIT SEDIMENTS FROM LEAVING THE SITE BY UTILIZING PROPER TEMPORARY EROSION CONTROL SYSTEMS AND PROVIDING GROUND COVER WITHIN A REASONABLE AMOUNT OF TIME.

CERTAIN EROSION CONTROL FACILITIES SHALL BE INSTALLED BY THE CONTRACTOR AT THE BEGINNING OF CONSTRUCTION. OTHER ITEMS SHALL BE INSTALLED BY THE CONTRACTOR AS DIRECTED BY THE ENGINEER ON A CASE BY CASE SITUATION DEPENDING ON THE CONTRACTOR'S SEQUENCE OF ACTIVITIES, TIME OF YEAR, AND EXPECTED WEATHER CONDITIONS.

THE CONTRACTOR SHALL INSTALL PERMANENT EROSION CONTROL SYSTEMS AND SEEDING WITHIN A TIMEFRAME SPECIFIED HEREIN AND AS DIRECTED BY THE ENGINEER, THEREFORE MINIMIZING THE AMOUNT OF AREA SUSCEPTIBLE TO EROSION AND REDUCING THE AMOUNT OF TEMPORARY SEEDING, WHICH WILL BE THE CONTRACTOR'S COST. THE ENGINEER WILL DETERMINE IF ANY TEMPORARY EROSION CONTROL SYSTEMS SHOWN IN THE PLAN CAN BE DELETED AND IF ANY ADDITIONAL TEMPORARY EROSION CONTROL SYSTEMS, WHICH ARE NOT INCLUDED IN THIS PLAN, SHALL BE ADDED. THE CONTRACTOR SHALL PERFORM ALL WORK AS DIRECTED BY THE ENGINEER AND AS SHOWN ON THE PLANS.

SITE DESCRIPTION

THE FOLLOWING IS A DESCRIPTION OF THE CONSTRUCTION ACTIVITY WHICH IS THE SUBJECT OF THIS PLAN:

THIS PROJECT CONSISTS EXPANDING A PARKING LOT AT THE CHICAGO ROCKFORD INTERNATIONAL AIRPORT. THE PROJECT INCLUDES PAVEMENT REMOVAL, EXCAVATION, EMBANKMENT, DRAINAGE, VARIOUS PAVEMENT ITEMS, ELECTRICAL IMPROVEMENTS AND OTHER MISCELLANEOUS CONSTRUCTION WORK.

THE FOLLOWING IS A DESCRIPTION OF THE INTENDED SEQUENCE OF MAJOR ACTIVITIES WHICH WILL DISTURB SOILS FOR MAJOR PORTIONS OF THE CONSTRUCTION SITE, SUCH AS GRUBBING, EXCAVATION AND GRADING:

1. EXCAVATION AND EMBANKMENT WILL BE COMPLETED WITHIN THE PROJECT LIMITS TO GRADE OUT FOR THE PROPOSED DRAINAGE AND PAVEMENT IMPROVEMENTS.
2. STORM SEWER, MANHOLE AND INLET INSTALLATION.
3. PLACEMENT, MAINTENANCE, REMOVAL AND PROPER CLEAN-UP OF TEMPORARY EROSION CONTROL, SUCH AS PERIMETER SILT FENCE, TEMPORARY DITCH CHECKS AND INLET PROTECTION.
4. PAVEMENT CONSTRUCTION.
5. FENCING AND ELECTRICAL IMPROVEMENTS.
6. FINAL GRADING AND OTHER MISCELLANEOUS ITEMS.
7. PLACEMENT OF PERMANENT EROSION CONTROL, SUCH AS SEEDING AND MULCHING.

AREA OF CONSTRUCTION SITE

THE TOTAL AREA OF THE CONSTRUCTION SITE IS ESTIMATED TO BE 3.0 ACRES OF WHICH 3.0 ACRES WILL BE DISTURBED BY EXCAVATION, GRADING AND OTHER ACTIVITIES.

OTHER REPORTS, STUDIES AND PLANS WHICH AID IN THE DEVELOPMENT OF THE STORM WATER POLLUTION PREVENTION PLAN AS REFERENCED DOCUMENTS:

1. INFORMATION OF THE SOILS AND TERRAIN WITHIN THE SITE WAS OBTAINED FROM TOPOGRAPHIC SURVEYS AND SOIL BORINGS THAT WERE UTILIZED FOR THE DEVELOPMENT OF THE PROPOSED TEMPORARY EROSION CONTROL SYSTEMS.
2. PROJECT PLAN DOCUMENTS, SPECIFICATION AND SPECIAL PROVISIONS, AND PLAN DRAWINGS INDICATING DRAINAGE PATTERNS AND APPROXIMATE SLOPES ANTICIPATED AFTER GRADING ACTIVITIES WERE UTILIZED FOR THE PROPOSED PLACEMENT OF THE TEMPORARY EROSION CONTROL SYSTEMS.

DRAINAGE TRIBUTARIES AND SENSITIVE AREAS RECEIVING RUNOFF FROM THIS CONSTRUCTION SITE:

THE CONSTRUCTION SITE DRAINS INTO THE ROCK RIVER THROUGH A STORM SEWER SYSTEM.

CONTROLS-EROSION CONTROLS AND SEDIMENT CONTROL

DESCRIPTION OF STABILIZATION PRACTICES AT THE BEGINNING OF CONSTRUCTION

1. THE DRAWINGS, SPECIFICATIONS AND SPECIAL PROVISIONS WILL ENSURE THAT EXISTING VEGETATION IS PRESERVED WHERE ATTAINABLE AND DISTURBED PORTIONS OF THE SITE WILL BE STABILIZED. STABILIZATION PRACTICES INCLUDE SEEDING AND MULCHING AS DIRECTED BY THE ENGINEER. STABILIZATION MEASURES SHALL BE INITIATED AS SOON AS POSSIBLE IN PORTIONS OF THE SITE WHERE CONSTRUCTION ACTIVITIES HAVE TEMPORARILY OR PERMANENTLY CEASED, BUT IN NO CASE MORE THAN 7 DAYS AFTER THE CONSTRUCTION ACTIVITY IN THAT PORTION OF THE SITE HAS TEMPORARILY OR PERMANENTLY CEASED.

AS SOON AS REASONABLE ACCESS IS AVAILABLE TO ALL LOCATIONS WHERE WATER DRAINS AWAY FROM THE PROJECT, TEMPORARY DITCH CHECKS, INLET PROTECTION AND PERIMETER SILT FENCE SHALL BE INSTALLED AS CALLED OUT IN THE PLANS OR AS DIRECTED BY THE ENGINEER.

THIS PLAN HAS BEEN PREPARED TO COMPLY WITH THE PROVISIONS OF THE NPDES PERMIT NUMBER ILR10, ISSUED BY THE ILLINOIS ENVIRONMENTAL PROTECTION AGENCY FOR STORM WATER DISCHARGES FROM CONSTRUCTION SITE ACTIVITIES.

DESCRIPTION OF STABILIZATION PRACTICES DURING CONSTRUCTION:

DURING CONSTRUCTION, AREAS OUTSIDE THE CONSTRUCTION LIMITS AS OUTLINED PREVIOUSLY HEREIN SHALL BE PROTECTED. THE CONTRACTOR SHALL NOT USE THIS AREA FOR STAGING (EXCEPT AS DESCRIBED ON THE PLANS AND DIRECTED BY THE ENGINEER), PARKING OF VEHICLES OR CONSTRUCTION EQUIPMENT, STORAGE OF MATERIALS, OR OTHER CONSTRUCTION RELATED ACTIVITIES.

1. WITHIN THE CONSTRUCTION LIMITS, AREAS WHICH MAY BE SUSCEPTIBLE TO EROSION AS DETERMINED BY THE ENGINEER SHALL REMAIN UNDISTURBED UNTIL FULL SCALE CONSTRUCTION IS UNDERWAY TO PREVENT UNNECESSARY SOIL EROSION.
2. EARTH STOCKPILES SHALL BE TEMPORARILY SEEDED, AT THE CONTRACTORS EXPENSE, IF THEY ARE TO REMAIN UNUSED FOR MORE THAN FOURTEEN DAYS.
3. AS CONSTRUCTION PROCEEDS, THE CONTRACTOR SHALL INSTITUTE THE FOLLOWING AS DIRECTED BY THE ENGINEER:
   - A. PLACE TEMPORARY EROSION CONTROL FACILITIES AT LOCATIONS SHOWN ON THE PLANS.
   - B. CONSTRUCT DITCHES AND PROVIDE TEMPORARY EROSION CONTROL SYSTEMS.
   - C. BUILD NECESSARY EMBANKMENT AT CULVERT/STORM SEWER LOCATIONS AND THEN EXCAVATE AND PLACE PIPE.
   - D. EXCAVATED AREAS AND EMBANKMENT AREAS SHALL BE PERMANENTLY SEEDED IMMEDIATELY AFTER FINAL GRADING. IF NOT, THEY SHALL BE TEMPORARILY SEEDED, AT THE CONTRACTOR'S COST, IF NO CONSTRUCTION ACTIVITY IN THE AREA IS PLANNED FOR SEVEN DAYS.
4. CONSTRUCTION EQUIPMENT SHALL BE STORED AND FUELED ONLY AT DESIGNATED LOCATIONS. ALL NECESSARY MEASURES SHALL BE TAKEN TO CONTAIN ANY FUEL OR POLLUTANT IN ACCORDANCE WITH EPA WATER QUALITY REGULATIONS. LEAKING EQUIPMENT OR SUPPLIES SHALL BE IMMEDIATELY REPAIRED OR REMOVED FROM THE SITE.
5. THE RESIDENT ENGINEER SHALL INSPECT THE PROJECT DAILY DURING CONSTRUCTION ACTIVITIES. INSPECTION SHALL ALSO BE DONE WEEKLY AND AFTER RAINS OF 1/2 INCH OR GREATER OR EQUIVALENT SNOWFALL AND DURING WINTER SHUTDOWN PERIOD.
6. SEDIMENT COLLECTED DURING CONSTRUCTION OF THE VARIOUS TEMPORARY EROSION CONTROL SYSTEMS SHALL BE DISPOSED OF ON SITE ON A REGULAR BASIS AS DIRECTED BY THE ENGINEER. THE COST OF THIS MAINTENANCE SHALL BE INCLUDED IN THE UNIT BID PRICE FOR UNCLASSIFIED EXCAVATION AND EROSION CONTROL ITEMS.
7. THE TEMPORARY EROSION CONTROL SYSTEMS SHALL BE REMOVED AS DIRECTED BY THE ENGINEER AFTER USE IS NO LONGER NEEDED OR NO LONGER FUNCTIONING, THE COST OF THIS REMOVAL SHALL BE INCLUDED IN THE UNIT BID PRICE FOR VARIOUS TEMPORARY EROSION CONTROL PAY ITEMS.

DESCRIPTION OF STRUCTURAL PRACTICES AFTER FINAL GRADING:

TEMPORARY EROSION CONTROL SYSTEMS SHALL BE LEFT IN PLACE WITH PROPER MAINTENANCE UNTIL PERMANENT EROSION CONTROL IS IN PLACE AND WORKING PROPERLY AND ALL PROPOSED TURF AREAS ARE SEEDED AND ESTABLISHED.

ONCE PERMANENT EROSION CONTROL SYSTEMS AS PROPOSED IN THE PLANS ARE FUNCTIONAL AND ESTABLISHED, TEMPORARY ITEMS SHALL BE REMOVED, CLEANED UP, AND DISTURBED TURF RESEEDED.

MAINTENANCE AFTER CONSTRUCTION

CONSTRUCTION IS COMPLETE AFTER FINAL ACCEPTANCE BY THE ILLINOIS DIVISION OF AERONAUTICS. MAINTENANCE UP TO THIS DATE WILL BE REQUIRED BY THE CONTRACTOR.

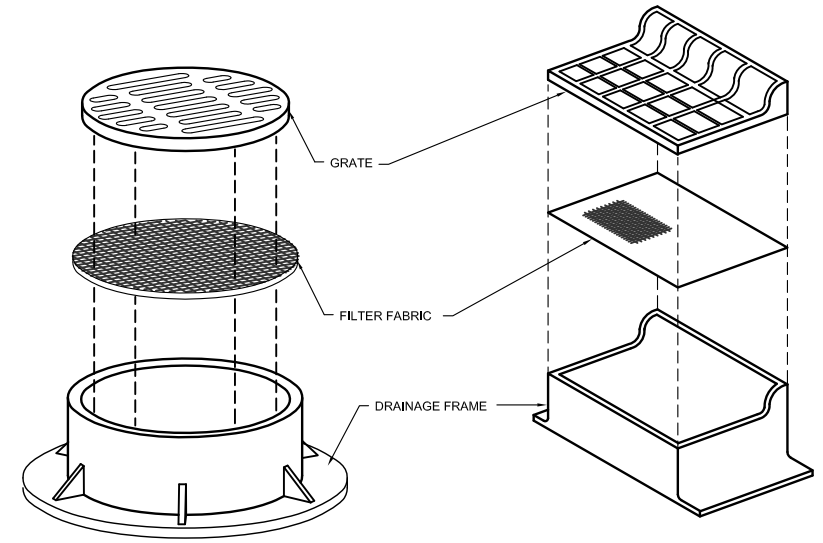

DRAINAGE STRUCTURE FILTER WRAP

N.T.S.

NOTES

1. FILTER WRAP TO BE PLACED IN ALL INLETS, MANHOLES, TRENCH DRAINS AND CATCH BASINS LOCATED IN PAVED AREAS AND NONPAVED AREAS.
2. FABRIC SHALL BE IN CONFORMANCE WITH MATERIALS SPECIFIED FOR SILT FENCE.
3. FABRIC SHALL OVERLAY FRAME BY 2" (MIN.).
4. CONTRACTOR SHALL CLEAR DEBRIS AND SILT AS REQUIRED FROM FABRIC TO MAINTAIN DRAINAGE THROUGH THE STRUCTURE.
5. FABRIC SHALL REMAIN IN PLACE UNTIL TURFED AREAS HAVE DEVELOPED A MIN. OF 80% OF COVERAGE.
6. COST OF FILTER WRAP SHALL BE CONSIDERED INCIDENTAL TO BALES.

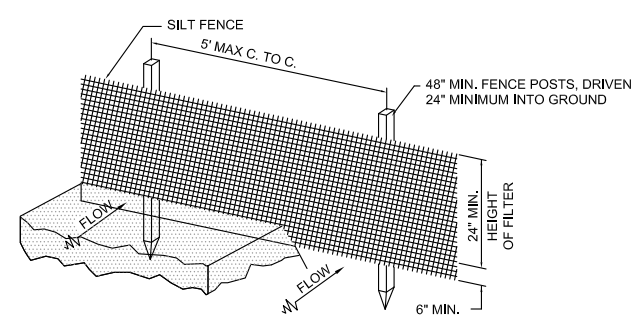

PERSPECTIVE VIEW

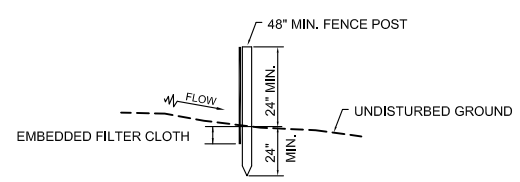

SECTION

EROSION CONTROL FABRIC FENCE DETAIL

N.T.S.

CONSTRUCTION NOTES FOR SILT FENCE

1. WHEN TWO SECTIONS OF FILTER CLOTH ADJOIN EACH OTHER THEY SHALL BE OVER-LAPPED BY 6" MIN. AND FOLDED.
2. MAINTENANCE SHALL BE PERFORMED AS NEEDED AND MATERIAL REMOVED WHEN "BULGES" DEVELOP IN THE SILT FENCE. MAINTENANCE, WHICH INCLUDES THE REPLACEMENT OF DAMAGED FENCE, SHALL BE CONSIDERED INCIDENTAL TO THE COST OF THE EROSION CONTROL FENCE.
3. SILT FENCE SHALL BE INSTALLED PER STORMWATER POLLUTION PREVENTION PLAN OR AS DIRECTED BY THE ENGINEER.

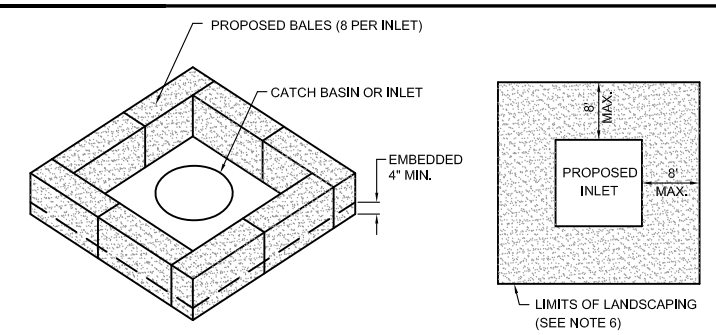

INLET PLACEMENT

INLET PLACEMENT

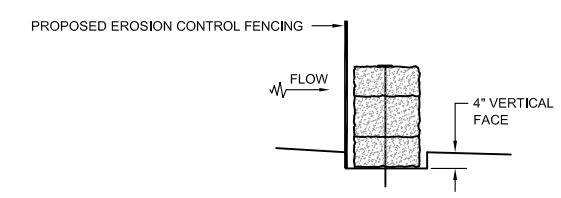

BEDDING DETAIL

INLET PROTECTION - TURF AREAS

N.T.S.

NOTES

1. BALES SHALL BE PLACED AT THE TOE OF SLOPE OR ON A CONTOUR AND IN A ROW WITH ENDS TIGHTLY ABUTTING THE ADJACENT BALES.
2. EACH BALE SHALL BE EMBEDDED IN THE SOIL A MINIMUM OF 4 INCHES, AND PLACED SO THE BINDINGS ARE HORIZONTAL.
3. BALES SHALL BE SECURELY ANCHORED IN PLACE BY EITHER TWO STAKES OR REBARS DRIVEN THROUGH THE BALE. THE FIRST STAKE IN EACH BALE SHALL BE DRIVEN TOWARD THE PREVIOUSLY LAID BALE AT AN ANGLE TO FORCE THE BALES TOGETHER. STAKES SHALL BE DRIVEN FLUSH WITH THE BALE.
4. INSPECTION SHALL BE FREQUENT AND REPAIR / REPLACEMENT SHALL BE MADE PROMPTLY AS NEEDED.
5. BALES SHALL BE REMOVED WHEN THEY HAVE SERVED THEIR USEFULNESS SO AS NOT TO BLOCK OR IMPEDE STORM FLOW OR DRAINAGE. COST OF REMOVAL / REPLACEMENT TO BE INCLUDED IN UNIT PRICE FOR BALES.
6. AFTER FINAL APPROVAL OF THE ENGINEER, STRAW BALES MAY BE REMOVED. CONTRACTOR SHALL PLACE SEED AND MULCH OVER THE DISTURBED AREAS, COST INCIDENTAL TO BALES.

IL. CONTRACT: **RO022**
IL. LETTING ITEM: **4A**
IL. PROJECT: **RFD-4187**
A.I.P. PROJECT:

SURVEY BOOK # 12258-02-00

REVISIONS

NUMBER	BY	DATE

0 1 2
THIS BAR IS EQUAL TO 2" AT FULL SCALE (34X22).

GREATER ROCKFORD AIRPORT AUTHORITY
CHICAGO ROCKFORD INTERNATIONAL AIRPORT
ROCKFORD, IL

EAST TERMINAL AUTO PARKING LOT, PHASE 1

STORM WATER POLLUTION PREVENTION PLAN DETAILS

© Copyright CMT, Inc.

CMT
CRAWFORD, MURPHY & TILLY, INC.
CONSULTING ENGINEERS
License No. 184-000613

DESIGN BY:	AAO
DRAWN BY:	CMT
CHECKED BY:	MLK/SMS
APPROVED BY:	DLP
DATE:	07/06/2012
JOB No:	12285-02-00/06

FINAL

XREF DWG: tb.dwg tbcint.dwg
IMAGE FILES: RFD Airport logo-CMYK.jpg
UPDAIL BY: Sean Smith
LAYOUT: EROSION_DTLS
DATE: Friday, July 06, 2012 1:52:56
FILE: K:\Rockford\12258-02_TermPLot\PH1\Draw\Sheets\EROSION_DTLS.dwg

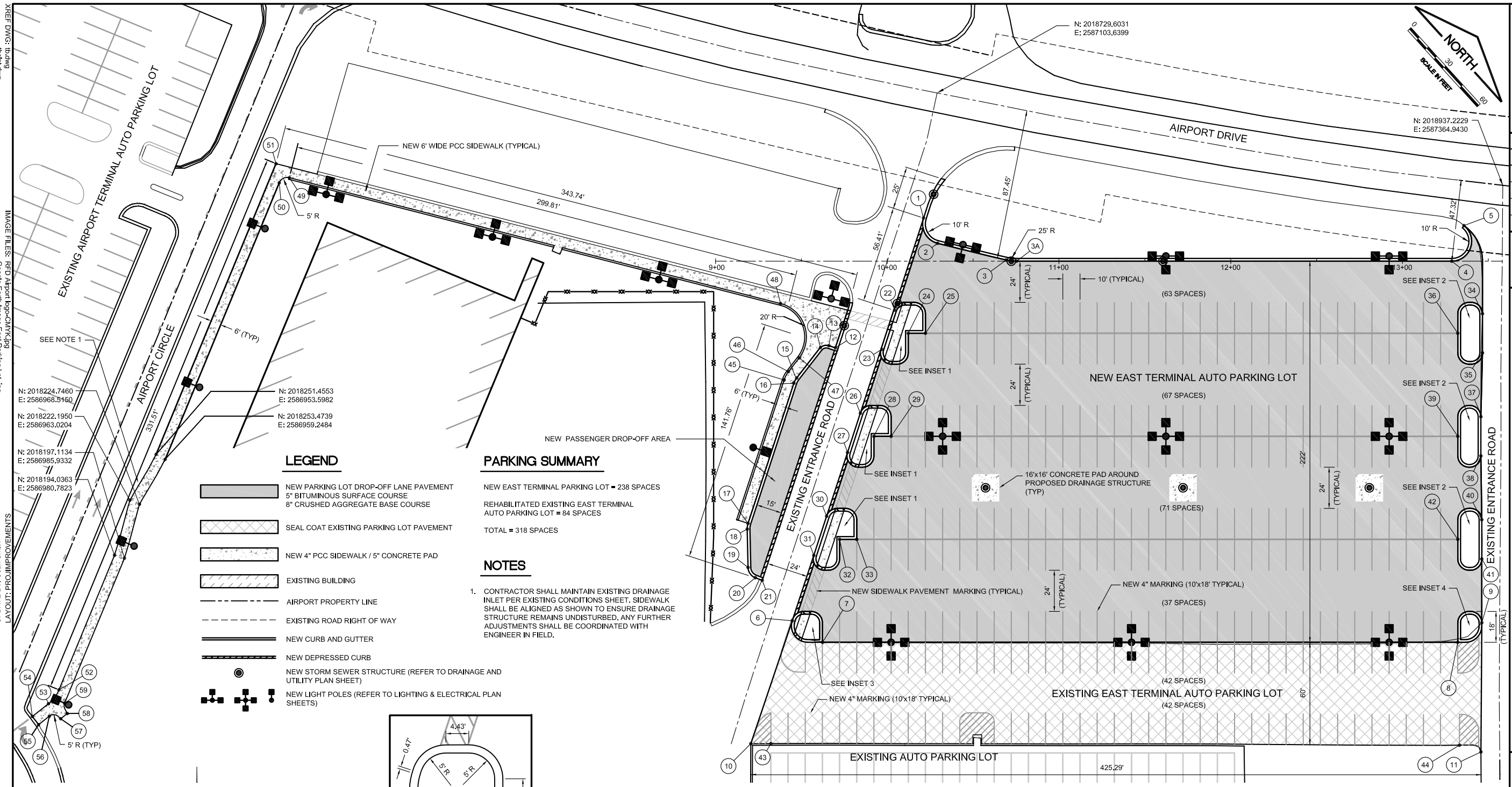

LEGEND

- NEW PARKING LOT DROP-OFF LANE PAVEMENT 5" BITUMINOUS SURFACE COURSE 8" CRUSHED AGGREGATE BASE COURSE
- SEAL COAT EXISTING PARKING LOT PAVEMENT
- NEW 4" PCC SIDEWALK / 5" CONCRETE PAD
- EXISTING BUILDING
- AIRPORT PROPERTY LINE
- EXISTING ROAD RIGHT OF WAY
- NEW CURB AND GUTTER
- NEW DEPRESSED CURB
- NEW STORM SEWER STRUCTURE (REFER TO DRAINAGE AND UTILITY PLAN SHEET)
- NEW LIGHT POLES (REFER TO LIGHTING & ELECTRICAL PLAN SHEETS)

PARKING SUMMARY

NEW EAST TERMINAL PARKING LOT = 238 SPACES

REHABILITATED EXISTING EAST TERMINAL AUTO PARKING LOT = 84 SPACES

TOTAL = 318 SPACES

NOTES

1. CONTRACTOR SHALL MAINTAIN EXISTING DRAINAGE INLET PER EXISTING CONDITIONS SHEET. SIDEWALK SHALL BE ALIGNED AS SHOWN TO ENSURE DRAINAGE STRUCTURE REMAINS UNDISTURBED. ANY FURTHER ADJUSTMENTS SHALL BE COORDINATED WITH ENGINEER IN FIELD.

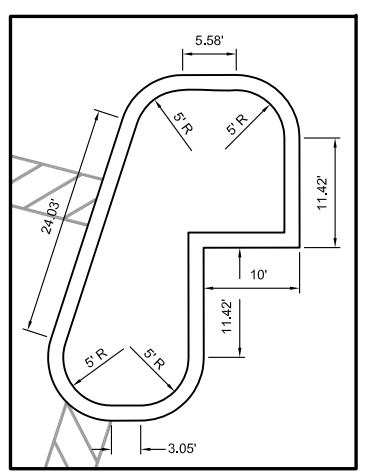

INSET 1

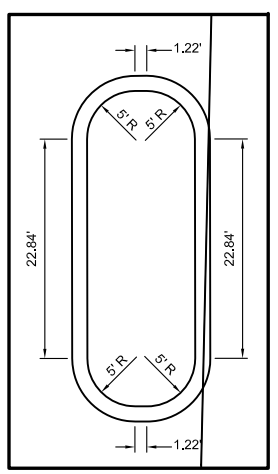

INSET 2

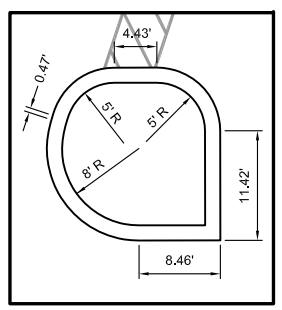

INSET 3

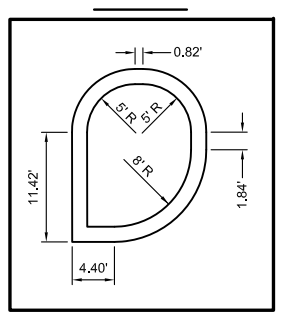

INSET 4

HORIZONTAL LAYOUT

Point	Station	Offset	Northing	Easting
1	10+21.09	25.16' LT	2018674.773	2587152.181
2	10+29.30	10.39' LT	2018670.9201	2587168.6425
3	10+69.26	0.69' LT	2018693.9713	2587202.6858
3A	10+75.28	0.00	2018697.9628	2587207.2460
4	13+28.72	0.00	2018885.5431	2587377.6806
5	13+35.82	20.73' LT	2018904.7358	2587367.1072
6	9+44.67	209.42' RT	2018460.4677	2587274.4102
7	9+62.23	222.00' RT	2018465.0031	2587295.5302
8	13+32.23	222.00' RT	2018738.8485	2587544.3448
9	13+46.21	210.58' RT	2018756.8767	2587545.2953
10	9+20.51	281.02' RT	2018394.4400	2587311.1570
11	13+45.71	285.83' RT	2018705.9020	2587600.6460
12	9+69.78	50.48' RT	2018585.9390	2587173.6621
13	9+66.01	49.24' RT	2018583.9746	2587170.2126
14	9+60.51	50.93' RT	2018578.7708	2587167.7611
15	9+47.22	68.03' RT	2018557.4341	2587171.4818
16	9+45.61	71.06' RT	2018554.2067	2587172.6414
17	9+18.92	152.71' RT	2018479.5452	2587215.1208
18	9+18.43	156.04' RT	2018476.9408	2587217.2548
19	9+18.93	178.38' RT	2018462.2873	2587234.1249
20	9+23.15	184.37' RT	2018461.3797	2587241.4026
21	9+27.17	185.92' RT	2018463.3183	2587245.2469
22	10+04.32	28.54' RT	2018626.2501	2587180.6539
23	9+96.87	51.38' RT	2018605.3756	2587192.5472
24	10+12.23	42.00' RT	2018623.0542	2587195.9317
25	10+22.23	42.00' RT	2018630.4554	2587202.6564
26	9+84.32	88.54' RT	2018571.0993	2587211.6119
27	9+76.87	111.38' RT	2018550.2248	2587223.5051
28	9+92.23	102.00' RT	2018567.9034	2587226.8896
29	10+02.23	102.00' RT	2018575.3047	2587233.6144
30	9+64.67	148.54' RT	2018516.2111	2587242.8025
31	9+57.22	171.38' RT	2018495.3366	2587254.6957
32	9+72.23	162.00' RT	2018512.7527	2587257.8476
33	9+82.23	162.00' RT	2018520.1539	2587264.5723
34	13+46.61	30.58' RT	2018878.2182	2587412.3427
35	13+46.61	53.42' RT	2018862.8590	2587429.2471
36	13+32.23	42.00' RT	2018859.8934	2587411.1228
37	13+45.67	90.58' RT	2018837.1722	2587456.1161
38	13+45.67	113.42' RT	2018821.8129	2587473.0205
39	13+32.23	102.00' RT	2018819.5451	2587455.5301
40	13+46.21	150.58' RT	2018797.2250	2587500.8879
41	13+46.21	173.42' RT	2018781.8657	2587517.7923
42	13+32.23	162.00' RT	2018779.1968	2587499.9375
43	9+37.19	281.32' RT	2018406.5749	2587322.5939
44	13+33.18	281.88' RT	2018699.2850	2587589.3088
45	9+39.91	82.25' RT	2018551.2397	2587167.4264
46	9+42.48	64.35' RT	2018556.4034	2587165.5710
47	9+48.71	56.34' RT	2018566.3960	2587163.8285
48	9+37.88	24.69' RT	2018579.6635	2587133.1256
49	N/A	N/A	2018417.2284	2586886.4755
50	N/A	N/A	2018410.9129	2586884.7065
51	N/A	N/A	2018416.9830	2586875.1940
52	N/A	N/A	2018117.3570	2587017.0566
53	N/A	N/A	2018107.4022	2587018.9315
54	N/A	N/A	2018095.4225	2587018.0930
55	N/A	N/A	2018094.9510	2587024.0747
56	N/A	N/A	2018102.9338	2587024.6334
57	N/A	N/A	2018106.7690	2587030.1730
58	N/A	N/A	2018111.6824	2587030.5178
59	N/A	N/A	2018114.5820	2587025.0090

IL. CONTRACT: **RO022**
IL. LETTING ITEM: **4A**
IL. PROJECT: **RFD-4187**
A.I.P. PROJECT:

SURVEY BOOK # 12258-02-00

REVISIONS

NUMBER	BY	DATE

0 1 2
THIS BAR IS EQUAL TO 2" AT FULL SCALE (34X22).

CHICAGO ROCKFORD INTERNATIONAL AIRPORT
ROCKFORD, IL
EAST TERMINAL AUTO PARKING LOT, PHASE 1

PROJECT IMPROVEMENTS

© Copyright CMT, Inc.

CMT
CRAWFORD, MURPHY & TILLY, INC.
CONSULTING ENGINEERS
License No. 184-000613

DESIGN BY:	AAO
DRAWN BY:	CMT
CHECKED BY:	MLK/SMS
APPROVED BY:	DLP
DATE:	07/06/2012
JOB No:	12285-02-00/06

FINAL

SHEET 11 OF 31 SHEETS

XREF DWG: tb.dwg
tbdfrt.dwg
Rfd E Term Base.DWG
IMAGE FILES: RFD Airport logo-CMYK.jpg
Google Earth Image East Parking Lot .jpg
UPDATE BY: Sean Smith
LAYOUT: PROJIMPROVEMENTS
DATE: Friday, July 06, 2012 13:28:49
FILE: K:\Rockford\dg\12258-02_TermPlLotPH1\Draw\Sheets\PROJIMPROVEMENTS.dwg

NOTES:

1. EXISTING WEST ENTRANCE ROAD PAVEMENT STRUCTURE IS 3" BITUMINOUS PAVEMENT ON 11"± AGGREGATE BASE COURSE.
2. EXISTING EAST ENTRANCE ROAD PAVEMENT STRUCTURE IS 1-½" BITUMINOUS PAVEMENT ON 8"± AGGREGATE BASE COURSE.
3. EXISTING AIRPORT ROAD PAVEMENT STRUCTURE IS ESTIMATED TO BE 10"± BITUMINOUS PAVEMENT ON 8" AGGREGATE BASE COURSE. THE CONTRACTOR SHALL VERIFY THE THICKNESS OF PAVEMENT TO BE REMOVED AND REPLACED.
4. BITUMINOUS PRIME COAT REQUIRED FOR REMOVE AND REPLACE BITUMINOUS PAVEMENT SHALL NOT BE MEASURED DIRECTLY, BUT SHALL BE CONSIDERED INCIDENTAL TO THE PAVEMENT REMOVAL AND REPLACEMENT.
5. BITUMINOUS TACK COAT SHALL BE PLACED BETWEEN EACH LIFT OF BITUMINOUS BASE OR SURFACE COURSE.
6. BITUMINOUS TACK COAT REQUIRED FOR REMOVE AND REPLACE BITUMINOUS PAVEMENT SHALL NOT BE MEASURED FOR DIRECTLY, BUT SHALL BE CONSIDERED INCIDENTAL TO THE PAVEMENT REMOVAL AND REPLACEMENT.
7. TRENCH BACKFILL UNDER EXISTING PAVEMENT SHALL BE CONTROLLED LOW STRENGTH MATERIAL AND SHALL BE BROUGHT TO THE TOP OF THE EXISTING AGGREGATE BASE COURSE, AS SHOWN.
8. POROUS GRANULAR EMBANKMENT (PGE) HAS BEEN ESTIMATED AS BEING REQUIRED OVER 5% OF THE PROJECT AREA AT 12-INCHES THICK FOR UNSTABLE SUBGRADE REPLACEMENT. PGE SHALL NOT BE USED UNLESS APPROVED BY THE ENGINEER.
9. RESTORATION OF THE TRENCH FOR INSTALLATION OF THE ELECTRICAL DUCT SHALL BE CONSIDERED INCIDENTAL TO THE DUCT.

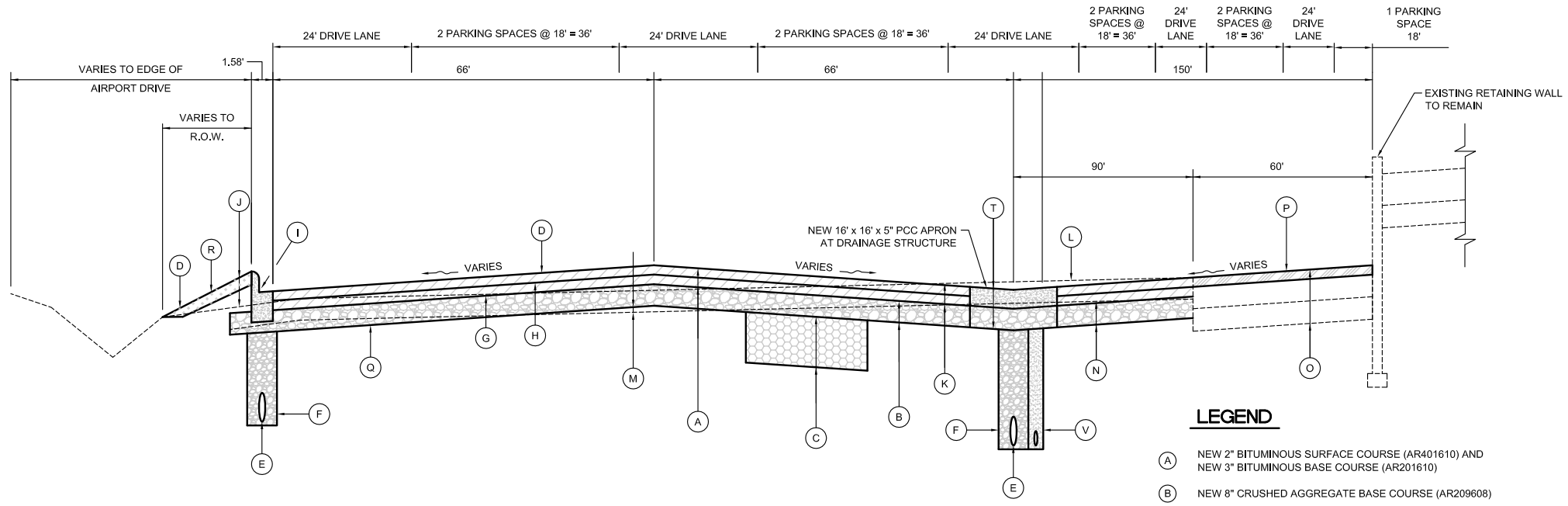

NEW EAST TERMINAL AUTO PARKING LOT TYPICAL SECTION A-A

NOT TO SCALE

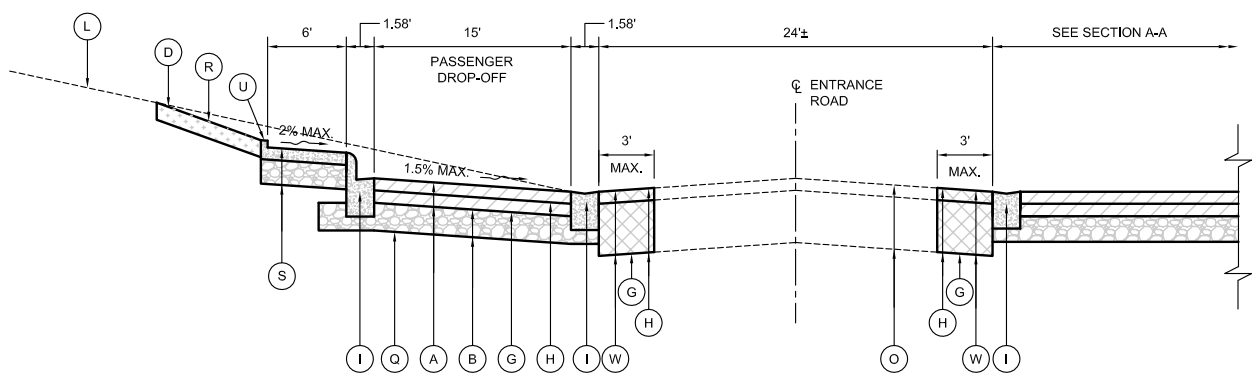

NEW PASSENGER DROP-OFF LANE SECTION B-B

NOT TO SCALE

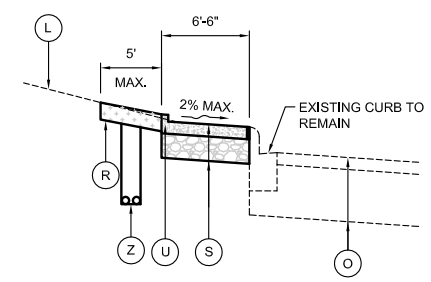

NEW SIDEWALK SECTION E-E

NOT TO SCALE

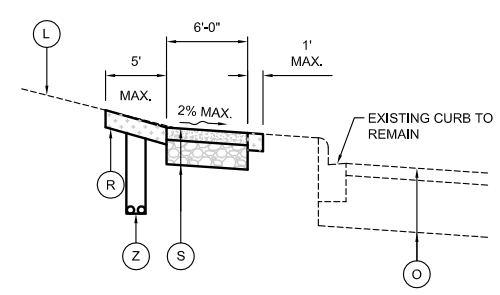

NEW SIDEWALK SECTION F-F

NOT TO SCALE

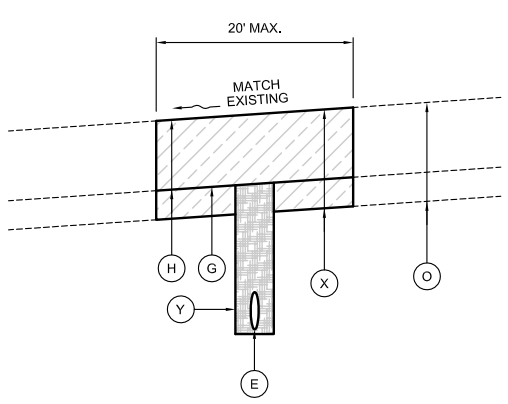

AIRPORT ROAD PAVEMENT REPLACEMENT SECTION C-C

NOT TO SCALE

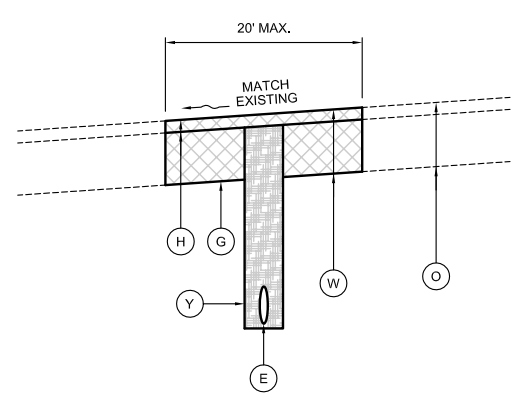

WEST ENTRANCE ROAD PAVEMENT REPLACEMENT SECTION D-D

NOT TO SCALE

LEGEND

- (A) NEW 2" BITUMINOUS SURFACE COURSE (AR401610) AND NEW 3" BITUMINOUS BASE COURSE (AR201610)
- (B) NEW 8" CRUSHED AGGREGATE BASE COURSE (AR209608)
- (C) NEW 12" POROUS GRANULAR EMBANKMENT, AS REQUIRED (AR208515) SEE NOTE 8
- (D) NEW GROUND LINE
- (E) NEW STORM SEWER (AR701)
- (F) NEW TRENCH BACKFILL (INCIDENTAL TO AR701)
- (G) NEW BITUMINOUS PRIME COAT (AR602510)
- (H) NEW BITUMINOUS TACK COAT (BETWEEN LIFTS) (AR603510)
- (I) NEW COMBINATION CONCRETE CURB AND GUTTER (AR754410)
- (J) NEW SHOULDER FILL (AR152410)
- (K) NEW TOPSOIL STRIPPING (12" AVG.) (AR152410)
- (L) EXISTING GROUND LINE
- (M) NEW EMBANKMENT FILL (AR152410)
- (N) NEW UNCLASSIFIED EXCAVATION (AR152410)
- (O) EXISTING PAVEMENT TO REMAIN - SEE NOTE 1
- (P) NEW CLEAN & SEAL BITUMINOUS CRACKS (AR201661) AND NEW TAR EMULSION SEAL COAT (AR625510)
- (Q) NEW SOIL STABILIZATION FABRIC (AR152540)
- (R) NEW TOPSOIL PLACEMENT (MIN. 4") AND SODDING (AR904510)
- (S) NEW 4" PCC SIDEWALK ON 5" AGGREGATE BASE COURSE (AR501604)
- (T) NEW 5" PCC SIDEWALK ON 8" AGGREGATE BASE COURSE (AR501605)
- (U) NEW 6" CONCRETE BARRIER CURB (AR754210)
- (V) NEW 6" PERFORATED UNDERDRAIN W/SOCK AND TRENCH ENVELOPE (AR705526)
- (W) REMOVE AND REPLACE BITUMINOUS PAVEMENT - TYPE A (AR401915)
- (X) REMOVE AND REPLACE BITUMINOUS PAVEMENT - TYPE B (AR401916)
- (Y) CONTROLLED LOW STRENGTH MATERIAL (INCIDENTAL TO AR701)
- (Z) PVC CONDUITS PER ELECTRICAL PLAN AND DETAILS, SEE NOTE 9

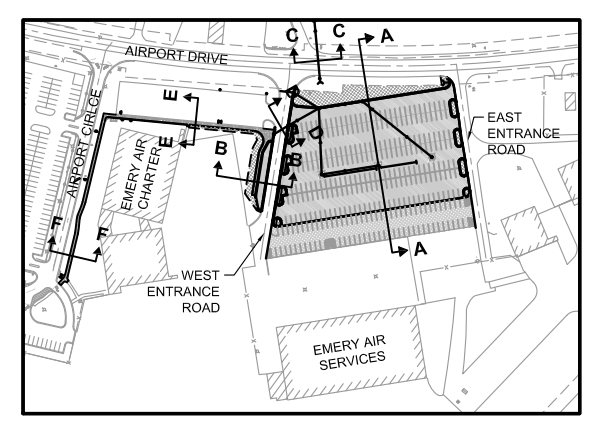

KEY MAP

IL. CONTRACT: **RO022**
IL. LETTING ITEM: **4A**
IL. PROJECT: **RFD-4187**
A.I.P. PROJECT:

SURVEY BOOK # 12258-02-00

REVISIONS

NUMBER	BY	DATE

0 1 2
THIS BAR IS EQUAL TO 2" AT FULL SCALE (34X22).

GREATER ROCKFORD AIRPORT AUTHORITY
CHICAGO ROCKFORD INTERNATIONAL AIRPORT
ROCKFORD, IL

EAST TERMINAL AUTO PARKING LOT, PHASE 1

TYPICAL SECTIONS

© Copyright CMT, Inc.

CMT
CRAWFORD, MURPHY & TILLY, INC.
CONSULTING ENGINEERS
License No. 184-000613

DESIGN BY:	SMS
DRAWN BY:	CMT
CHECKED BY:	MLK/SMS
APPROVED BY:	DLP
DATE:	07/06/2012
JOB No:	12285-02-00/06

FINAL

SHEET 12 OF 31 SHEETS

XREF DWG: tb.dwg tbcint.dwg Rtd E Term Base.DWG
IMAGE FILES: RFD Airport logo-CMYK.jpg Google Earth Image East Parking Lot .jpg
UPDATE BY: Sean Smith
LAYOUT: TYPSEC
DATE: Friday, July 06, 2012 13:30:16
FILE: K:\Rockford\12258-02_TermPkLotPH1\Draw\Sheets\TYPSEC.dwg

LEGEND

- NEW PARKING LOT/PASSENGER DROP-OFF PAVEMENT
- EXISTING PARKING LOT WITH NEW SEAL COAT
- SS — NEW STORM SEWER
- NEW STORM SEWER STRUCTURE
- NEW UNDERDRAIN
- NEW COMBINATION CONCRETE CURB AND GUTTER
- NEW DEPRESSED CURB
- W1 — ADJUST EXISTING WATERMAIN MANHOLE (REFER TO TABLE ON SHEET)
- SAN1 — ADJUST EXISTING SANITARY MANHOLE (REFER TO TABLE ON SHEET)
- W — EXISTING WATERMAIN
- SAN — EXISTING SANITARY SEWER
- G — EXISTING GAS MAIN
- SS — EXISTING STORM SEWER
- T — EXISTING TELEPHONE UTILITY
- OHE — EXISTING OVERHEAD ELECTRIC LINES
- EXISTING UTILITY POLE
- EXISTING STORM/SANITARY/WATERMAIN MANHOLE
- EXISTING FLARED END SECTION
- EXISTING CURB AND GUTTER
- AIRPORT PROPERTY LINE
- EXISTING ELECTRICAL HANDHOLE
- EXISTING STREET LIGHTING
- W — EXISTING WATER VALVE VAULT
- W — EXISTING WATER VALVE
- X — EXISTING AIRFIELD FENCE
- EXISTING BUILDING
- E — EXISTING ELECTRIC UTILITY
- UD — EXISTING UNDERDRAIN
- EXISTING ELECTRIC HANDHOLE
- EXISTING FIRE HYDRANT
- EXISTING ROADWAY SIGN
- EXISTING UNDERDRAIN CLEANOUT
- EXISTING INLET
- REL — ITEM TO BE RELOCATED
- REM — ITEM TO BE REMOVED
- A — ITEM TO BE ADJUSTED

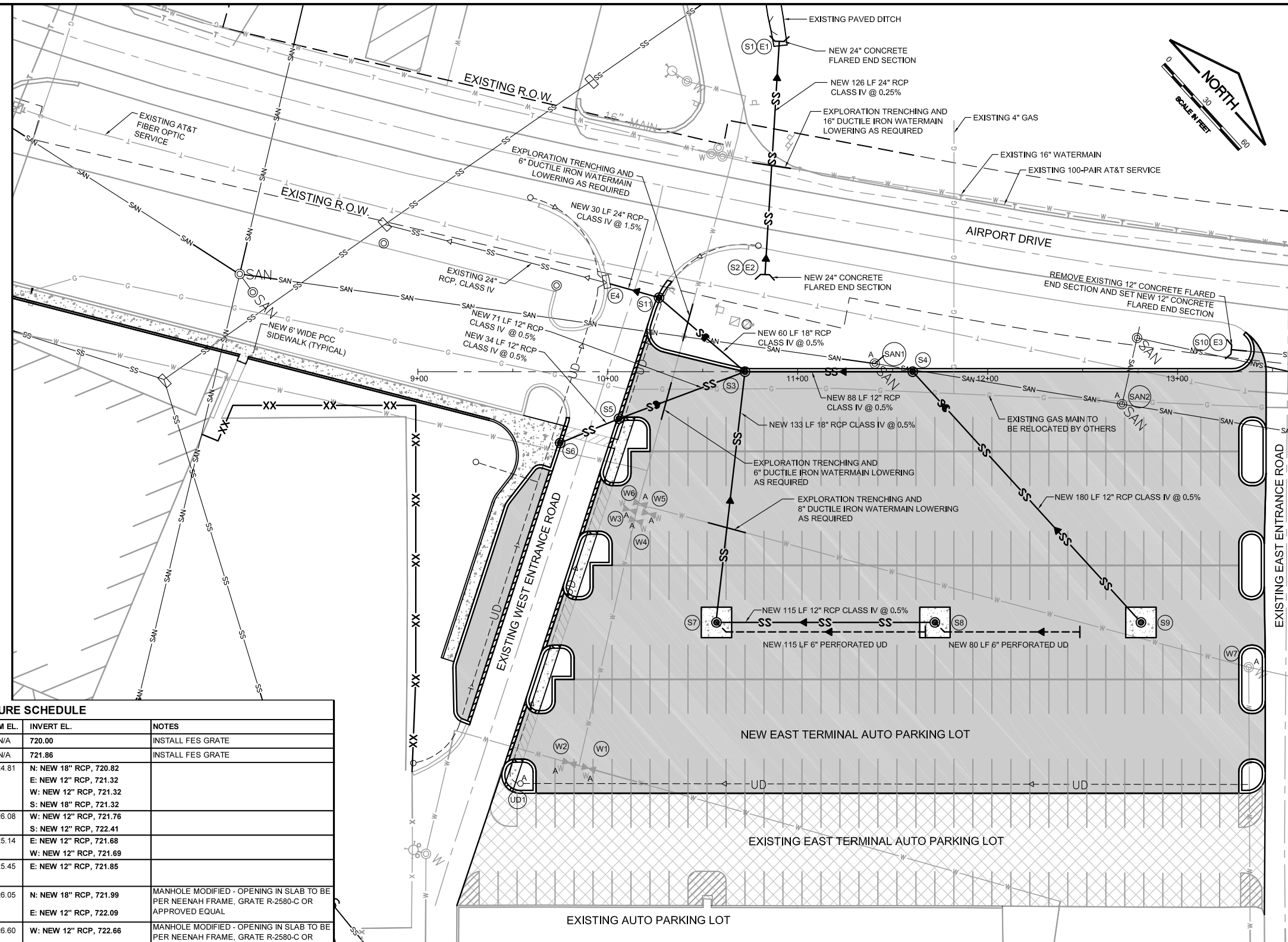

DRAINAGE STRUCTURE SCHEDULE

STRUCTURE ID	TYPE	LOCATION	RIM EL.	INVERT EL.	NOTES
S1	NEW CONCRETE FES - 24"	STA. 10+90, 174' LT.	N/A	**720.00**	INSTALL FES GRATE
S2	NEW CONCRETE FES - 24"	STA. 10+83, 49' LT.	N/A	**721.86**	INSTALL FES GRATE
S3	NEW 6' DIA. MANHOLE TYPE 1 FRAME AND OPEN LID	STA. 10+72, 0.00' RT.	724.81	**N: NEW 18" RCP, 720.82 E: NEW 12" RCP, 721.32 W: NEW 12" RCP, 721.32 S: NEW 18" RCP, 721.32**	
S4	NEW 6' DIA. MANHOLE TYPE 1 FRAME AND OPEN LID	STA. 11+61, 0.00' RT.	726.08	**W: NEW 12" RCP, 721.76 S: NEW 12" RCP, 722.41**	
S5	NEW 6' DIA. MANHOLE TYPE 11 FRAME AND OPEN LID	STA. 10+06, 25' RT.	725.14	**E: NEW 12" RCP, 721.68 W: NEW 12" RCP, 721.69**	
S6	NEW 6' DIA. MANHOLE TYPE 11 FRAME AND OPEN LID	STA. 9+75, 37.5' RT.	725.45	**E: NEW 12" RCP, 721.85**	
S7	NEW 6' DIA. MANHOLE - MODIFIED MODIFIED FRAME (REFER TO NOTES)	STA. 10+57, 134' RT.	726.05	**N: NEW 18" RCP, 721.99 E: NEW 12" RCP, 722.09**	MANHOLE MODIFIED - OPENING IN SLAB TO BE PER NEENAH FRAME, GRATE R-2580-C OR APPROVED EQUAL
S8	NEW 6' DIA. MANHOLE - MODIFIED MODIFIED FRAME (REFER TO NOTES)	STA. 11+72, 132' RT.	726.60	**W: NEW 12" RCP, 722.66**	MANHOLE MODIFIED - OPENING IN SLAB TO BE PER NEENAH FRAME, GRATE R-2580-C OR APPROVED EQUAL
S9	NEW 6' DIA. MANHOLE - MODIFIED MODIFIED FRAME (REFER TO NOTES)	STA. 12+81, 132' RT.	727.30	**W: NEW 12" RCP, 723.31**	MANHOLE MODIFIED - OPENING IN SLAB TO BE PER NEENAH FRAME, GRATE R-2580-C OR APPROVED EQUAL
S10	NEW CONCRETE FES - 12"	STA. 13+28, 12' LT.	N/A	**726.42**	INSTALL FES GRATE
S11	NEW 6' DIA. MANHOLE TYPE 11 FRAME AND OPEN LID	STA. 10+26.99, 38.96' LT.	725.45	**E: NEW 18" RCP, 720.52 W: NEW 24" RCP, 717.90 N: NEW 4" UD, 719.15 S: NEW 4" UD, 719.75**	EXISTING UNDERDRAIN SHALL BE TIED TO THE NEW MANHOLE STRUCTURE - COST INCIDENTAL TO THE MANHOLE.

DRAINAGE STRUCTURE SCHEDULE

STRUCTURE ID	TYPE	LOCATION	RIM EL.	INVERT EL.	NOTES
E1	EXISTING CMP FES - 24"	STA. 10+90, 174' LT.	N/A	**720.00**	REMOVE AND REPLACE WITH STRUCTURE S1
E2	EXISTING CMP FES - 24"	STA. 10+83, 49' LT.	N/A	**721.86**	REMOVE AND REPLACE WITH STRUCTURE S2
E3	EXISTING CONCRETE FES - 12"	STA. 13+36, 1' LT.	N/A	**726.15**	REMOVE FES AND EXTEND PIPE TO NEW STRUCTURE S10
E4	EXISTING MANHOLE	STA. 9+99.53, 46.70' LT.	724.81	**E: NEW 24" RCP, 717.44 W: EXISTING 24" RCP, 717.44 N: EXISTING 6" UD, 718.44 S: EXISTING 6" UD, 718.44**	

EXISTING WATER VALVE ADJUSTMENT SCHEDULE

VALVE NUMBER	EXISTING RIM ELEVATION	NEW RIM ELEVATION
W1	728.40	728.27
W2	728.21	728.18
W3	725.75	726.03
W4	725.83	726.23
W5	726.02	726.23
W6	725.83	726.02
W7	729.31	729.69

EXISTING SANITARY MANHOLE ADJUSTMENT SCHEDULE

MANHOLE NUMBER	EXISTING RIM ELEVATION	NEW RIM ELEVATION
SAN1	724.60	726.05
SAN2	726.85	727.94

EXISTING UNDERDRAIN CLEANOUT STRUCTURE ADJUSTMENT SCHEDULE

STRUCTURE NUMBER	EXISTING RIM ELEVATION	NEW RIM ELEVATION
UD1	728.27	728.71

IL. CONTRACT: **RO022**
IL. LETTING ITEM: **4A**
IL. PROJECT: **RFD-4187**
A.I.P. PROJECT:

SURVEY BOOK # 12258-02-00

REVISIONS

NUMBER	BY	DATE

0 1 2
THIS BAR IS EQUAL TO 2" AT FULL SCALE (34X22).

GREATER ROCKFORD AIRPORT AUTHORITY
CHICAGO ROCKFORD INTERNATIONAL AIRPORT
ROCKFORD, IL

EAST TERMINAL AUTO PARKING LOT, PHASE 1

DRAINAGE AND UTILITY IMPROVEMENTS

© Copyright CMT, Inc.

CMT
CRAWFORD, MURPHY & TILLY, INC.
CONSULTING ENGINEERS
License No. 184-000613

ROCKFORD
RFD
CHICAGO ROCKFORD INTERNATIONAL AIRPORT

DESIGN BY: AAO/SMS
DRAWN BY: CMT
CHECKED BY: MLK/SMS
APPROVED BY: DLP
DATE: 07/06/2012
JOB No: 12285-02-00/06

FINAL

SHEET 13 OF 31 SHEETS

XREF DWG: tb.dwg, tbdrh.dwg
IMAGE FILES: RFD Airport logo-CMYK.jpg, Google Earth Image East Parking Lot .jpg
UPDATE BY: Sean Smith
LAYOUT: DRAINAUTILTYPLAN
DATE: Friday, July 06, 2012 13:31:09
FILE: K:\Rockford\p\12285-02_TermPkLot\RFH\Draw\Sheets\DRAINAUTILTYPLAN.dwg

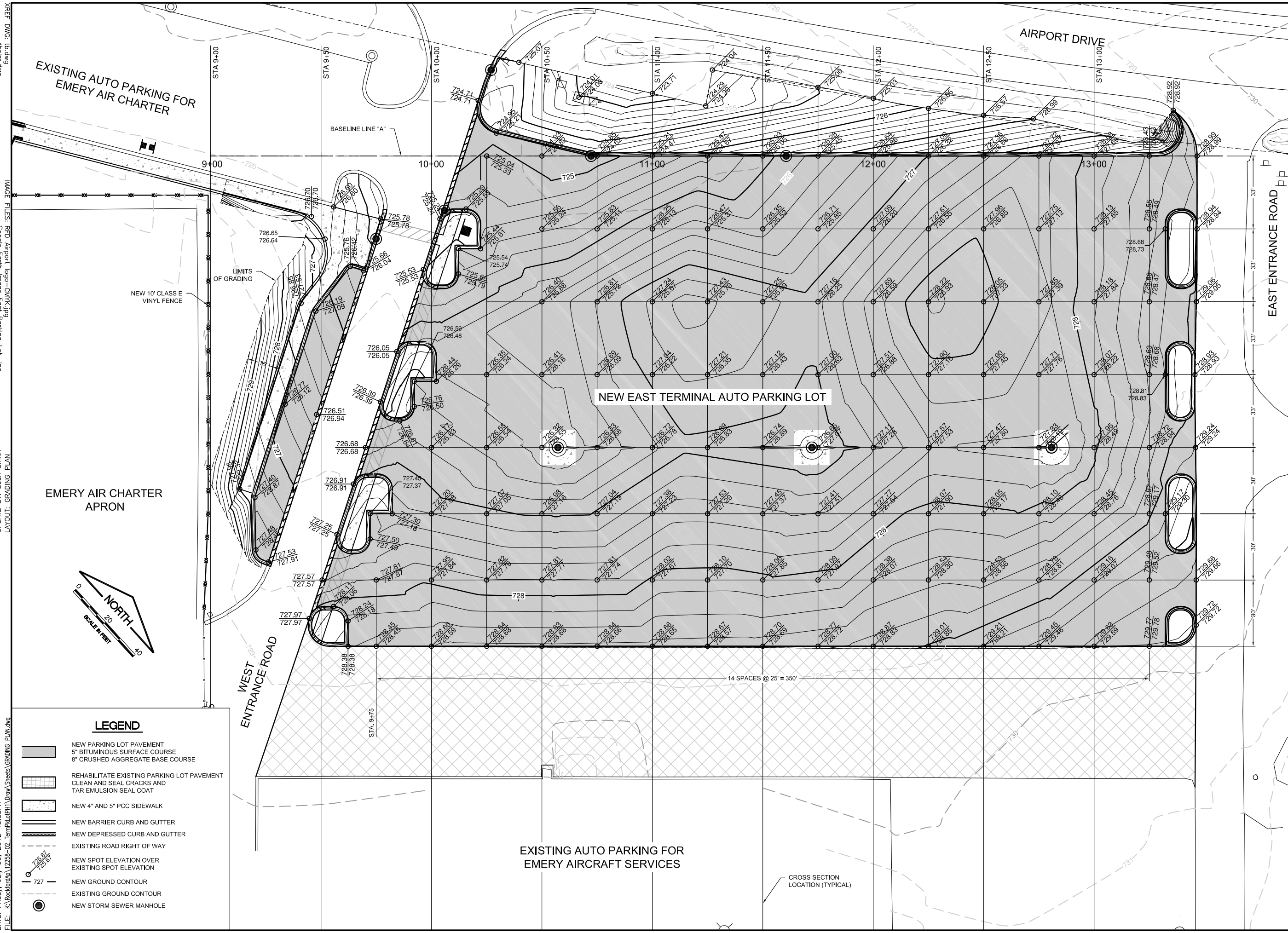

LEGEND

- NEW PARKING LOT PAVEMENT 5" BITUMINOUS SURFACE COURSE 8" CRUSHED AGGREGATE BASE COURSE
- REHABILITATE EXISTING PARKING LOT PAVEMENT CLEAN AND SEAL CRACKS AND TAR EMULSION SEAL COAT
- NEW 4" AND 5" PCC SIDEWALK
- NEW BARRIER CURB AND GUTTER
- NEW DEPRESSED CURB AND GUTTER
- EXISTING ROAD RIGHT OF WAY
- 725.95 / 725.97 NEW SPOT ELEVATION OVER EXISTING SPOT ELEVATION
- 727 NEW GROUND CONTOUR
- EXISTING GROUND CONTOUR
- NEW STORM SEWER MANHOLE

IL. CONTRACT: **RO022**
IL. LETTING ITEM: **4A**
IL. PROJECT: **RFD-4187**
A.I.P. PROJECT:

SURVEY BOOK # 12258-02-00

REVISIONS

NUMBER	BY	DATE

0 1 2
THIS BAR IS EQUAL TO 2" AT FULL SCALE (34X22).

GREATER ROCKFORD AIRPORT AUTHORITY
CHICAGO ROCKFORD INTERNATIONAL AIRPORT
ROCKFORD, IL

EAST TERMINAL AUTO PARKING LOT, PHASE 1

GRADING PLAN

© Copyright CMT, Inc.

CMT
CRAWFORD, MURPHY & TILLY, INC.
CONSULTING ENGINEERS
License No. 184-000613

DESIGN BY:	SMS
DRAWN BY:	CMT
CHECKED BY:	MLK/SMS
APPROVED BY:	DLP
DATE:	07/06/2012
JOB No:	12285-02-00/06

FINAL

SHEET 14 OF 31 SHEETS

XREF DWG: tb.dwg tbcint.dwg Rfd E_Term Base.DWG East Terminal Parking Lot Topo.dwg
IMAGE FILES: RFD Airport logo-CMYK.jpg Google Earth Image East Parking Lot .jpg
UPDATE BY: Sean Smith
LAYOUT: GRADING PLAN
DATE: Friday, July 06, 2012 13:53:47
FILE: K:\Rockfordap\12258-02_TermPkLotPH1\Draw\Sheets\GRADING PLAN.dwg

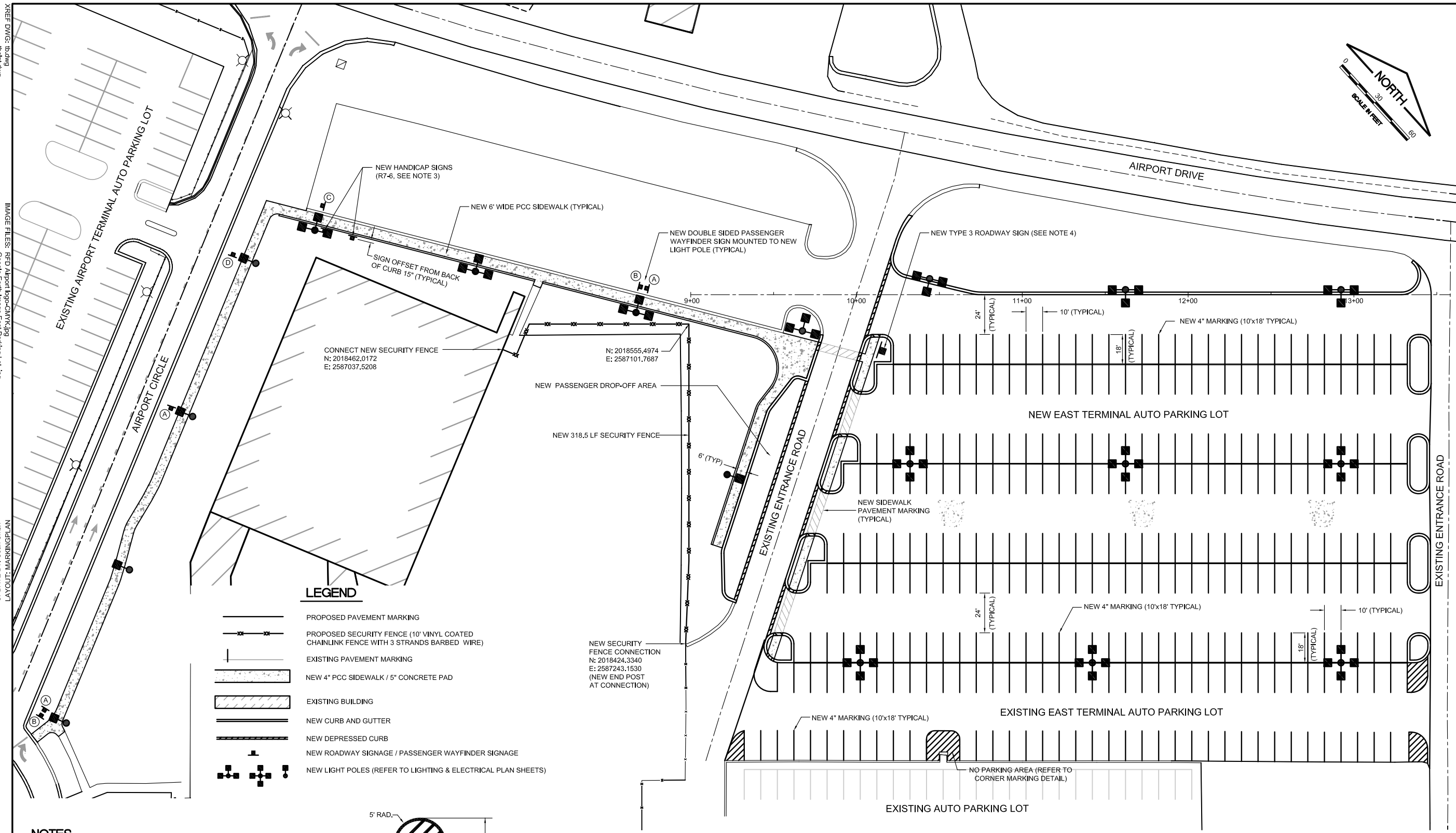

LEGEND

- PROPOSED PAVEMENT MARKING
- PROPOSED SECURITY FENCE (10' VINYL COATED CHAINLINK FENCE WITH 3 STRANDS BARBED WIRE)
- EXISTING PAVEMENT MARKING
- NEW 4" PCC SIDEWALK / 5" CONCRETE PAD
- EXISTING BUILDING
- NEW CURB AND GUTTER
- NEW DEPRESSED CURB
- NEW ROADWAY SIGNAGE / PASSENGER WAYFINDER SIGNAGE
- NEW LIGHT POLES (REFER TO LIGHTING & ELECTRICAL PLAN SHEETS)

NOTES

1. ALL NEW AND EXISTING PAVEMENTS TO BE MARKED OR RE-MARKED SHALL BE CLEAN AND DRY PRIOR TO MARKING.
2. REFER TO PROPOSED IMPROVEMENTS SHEET FOR LAYOUT COORDINATES, RADIUS INFORMATION AND CURB DIMENSIONS AND LAYOUT.
3. HANDICAP SIGN SHALL BE SIGN R7-6 WITH ADDITIONAL $250 FINE SIGN MOUNTED ON SAME POST
4. PASSENGER WAYFINDER SIGNS SHALL BE PER DETAIL ON SHEET XX. FINAL TYPE 3 SIGN LEGEND TO BE DETERMINED BY AIRPORT AND SHALL BE COORDINATED WITH ENGINEER.

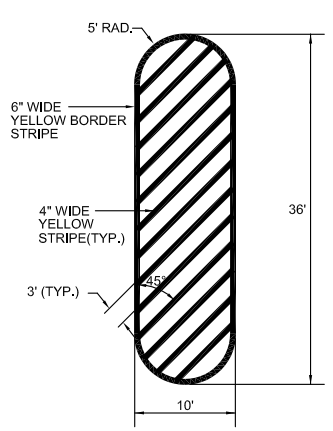

ISLAND DETAIL
N.T.S.

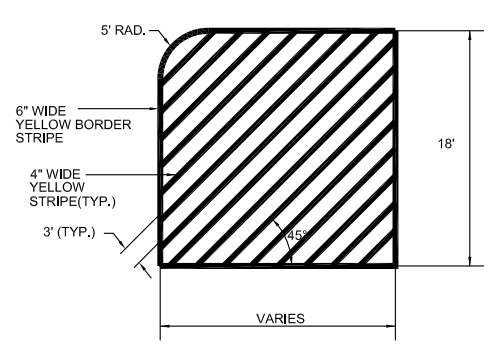

CORNER DETAIL
N.T.S.

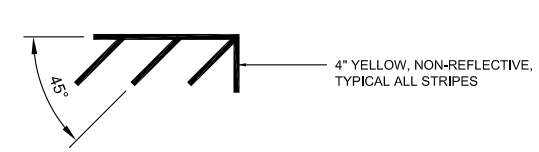

PAVEMENT MARKING - PAINTED ISLAND
N.T.S.

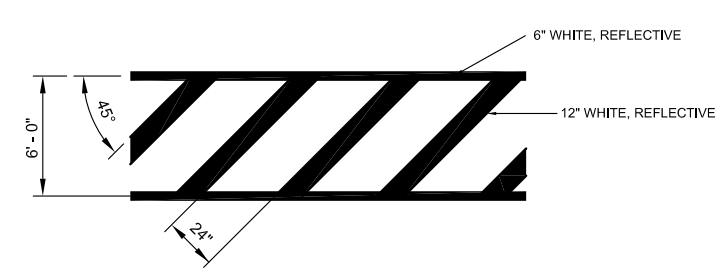

PAVEMENT MARKING - PEDESTRIAN CROSSING
N.T.S.

IL. CONTRACT: **RO022**
IL. LETTING ITEM: **4A**
IL. PROJECT: **RFD-4187**
A.I.P. PROJECT:

SURVEY BOOK # 12258-02-00

REVISIONS

NUMBER	BY	DATE

0 1 2
THIS BAR IS EQUAL TO 2" AT FULL SCALE (34X22).

GREATER ROCKFORD AIRPORT AUTHORITY
CHICAGO ROCKFORD INTERNATIONAL AIRPORT
ROCKFORD, IL

EAST TERMINAL AUTO PARKING LOT, PHASE 1

PAVEMENT MARKING PLAN

© Copyright CMT, Inc.

CMT
CRAWFORD, MURPHY & TILLY, INC.
CONSULTING ENGINEERS
License No. 184-000613

DESIGN BY:	AAO
DRAWN BY:	CMT
CHECKED BY:	MLK/SMS
APPROVED BY:	DLP
DATE:	07/06/2012
JOB No:	12285-02-00/06

FINAL

SHEET 15 OF 31 SHEETS

XREF DWG: tb.dwg
tbdfrt.dwg
Rfd E Term Base.DWG
IMAGE FILES: RFD Airport logo-CMYK.jpg
Google Earth Image East Parking Lot .jpg
UPDATE BY: Sean Smith
LAYOUT: MARKINGPLAN
DATE: Friday, July 06, 2012 13:32:13
FILE: K:\Rockford\dg\12258-02_TermPhLoPH1\Draw\Sheets\MARKINGPLAN.dwg

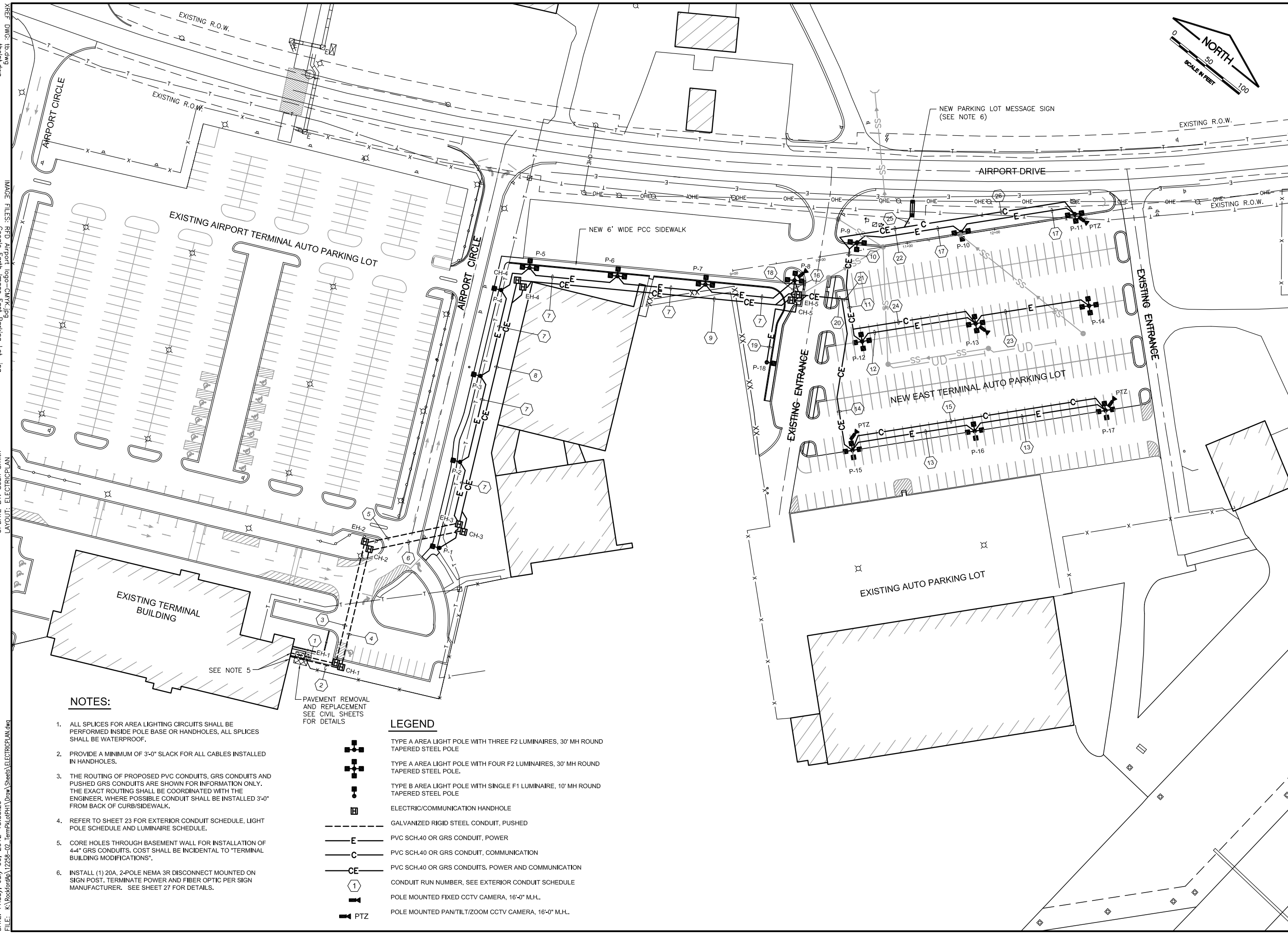

NOTES:

1. ALL SPLICES FOR AREA LIGHTING CIRCUITS SHALL BE PERFORMED INSIDE POLE BASE OR HANDHOLES. ALL SPLICES SHALL BE WATERPROOF.
2. PROVIDE A MINIMUM OF 3'-0" SLACK FOR ALL CABLES INSTALLED IN HANDHOLES.
3. THE ROUTING OF PROPOSED PVC CONDUITS, GRS CONDUITS AND PUSHED GRS CONDUITS ARE SHOWN FOR INFORMATION ONLY. THE EXACT ROUTING SHALL BE COORDINATED WITH THE ENGINEER. WHERE POSSIBLE CONDUIT SHALL BE INSTALLED 3'-0" FROM BACK OF CURB/SIDEWALK.
4. REFER TO SHEET 23 FOR EXTERIOR CONDUIT SCHEDULE, LIGHT POLE SCHEDULE AND LUMINAIRE SCHEDULE.
5. CORE HOLES THROUGH BASEMENT WALL FOR INSTALLATION OF 4-4" GRS CONDUITS. COST SHALL BE INCIDENTAL TO "TERMINAL BUILDING MODIFICATIONS".
6. INSTALL (1) 20A, 2-POLE NEMA 3R DISCONNECT MOUNTED ON SIGN POST. TERMINATE POWER AND FIBER OPTIC PER SIGN MANUFACTURER. SEE SHEET 27 FOR DETAILS.

LEGEND

- TYPE A AREA LIGHT POLE WITH THREE F2 LUMINAIRES, 30' MH ROUND TAPERED STEEL POLE
- TYPE A AREA LIGHT POLE WITH FOUR F2 LUMINAIRES, 30' MH ROUND TAPERED STEEL POLE.
- TYPE B AREA LIGHT POLE WITH SINGLE F1 LUMINAIRE, 10' MH ROUND TAPERED STEEL POLE
- ELECTRIC/COMMUNICATION HANDHOLE
- GALVANIZED RIGID STEEL CONDUIT, PUSHED
- E — PVC SCH.40 OR GRS CONDUIT, POWER
- C — PVC SCH.40 OR GRS CONDUIT, COMMUNICATION
- CE — PVC SCH.40 OR GRS CONDUITS. POWER AND COMMUNICATION
- (1) CONDUIT RUN NUMBER, SEE EXTERIOR CONDUIT SCHEDULE
- POLE MOUNTED FIXED CCTV CAMERA, 16'-0" M.H..
- PTZ — POLE MOUNTED PAN/TILT/ZOOM CCTV CAMERA, 16'-0" M.H..

IL. CONTRACT: **RO022**
IL. LETTING ITEM: **4A**
IL. PROJECT: **RFD-4187**
A.I.P. PROJECT:

SURVEY BOOK # 12258-02-00

REVISIONS		
NUMBER	BY	DATE

0 1 2
THIS BAR IS EQUAL TO 2" AT FULL SCALE (34X22).

GREATER ROCKFORD AIRPORT AUTHORITY
CHICAGO ROCKFORD INTERNATIONAL AIRPORT
ROCKFORD, IL

EAST TERMINAL AUTO PARKING LOT, PHASE 1

ELECTRICAL PLAN

© Copyright CMT, Inc.

CMT
CRAWFORD, MURPHY & TILLY, INC.
CONSULTING ENGINEERS
License No. 184-000613

DESIGN BY:	AB
DRAWN BY:	CMT
CHECKED BY:	MLK/SMS
APPROVED BY:	DLP
DATE:	07/06/2012
JOB No:	12285-02-00/06

FINAL

SHEET 16 OF 31 SHEETS

XREF DWG: tb.dwg tbcint.dwg Rtd E Term Base.DWG
IMAGE FILES: RFD Airport logo-CMYK.jpg Google Earth Image East Parking Lot .jpg
UPDATE BY: Sean Smith
LAYOUT: ELECTRICPLAN
DATE: Friday, July 06, 2012 13:35:20
FILE: K:\Rockford\12258-02_TermPkLotPH1\Draw\Sheets\ELECTRICPLAN.dwg

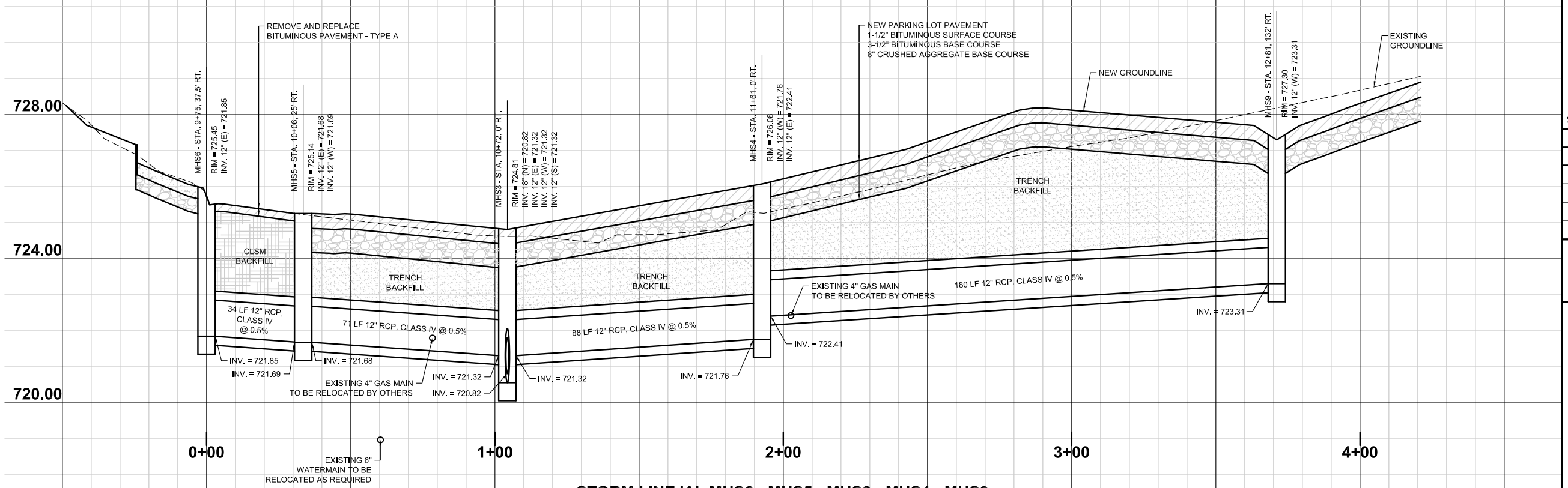

STORM LINE 'A': MHS6 - MHS5 - MHS3 - MHS4 - MHS9

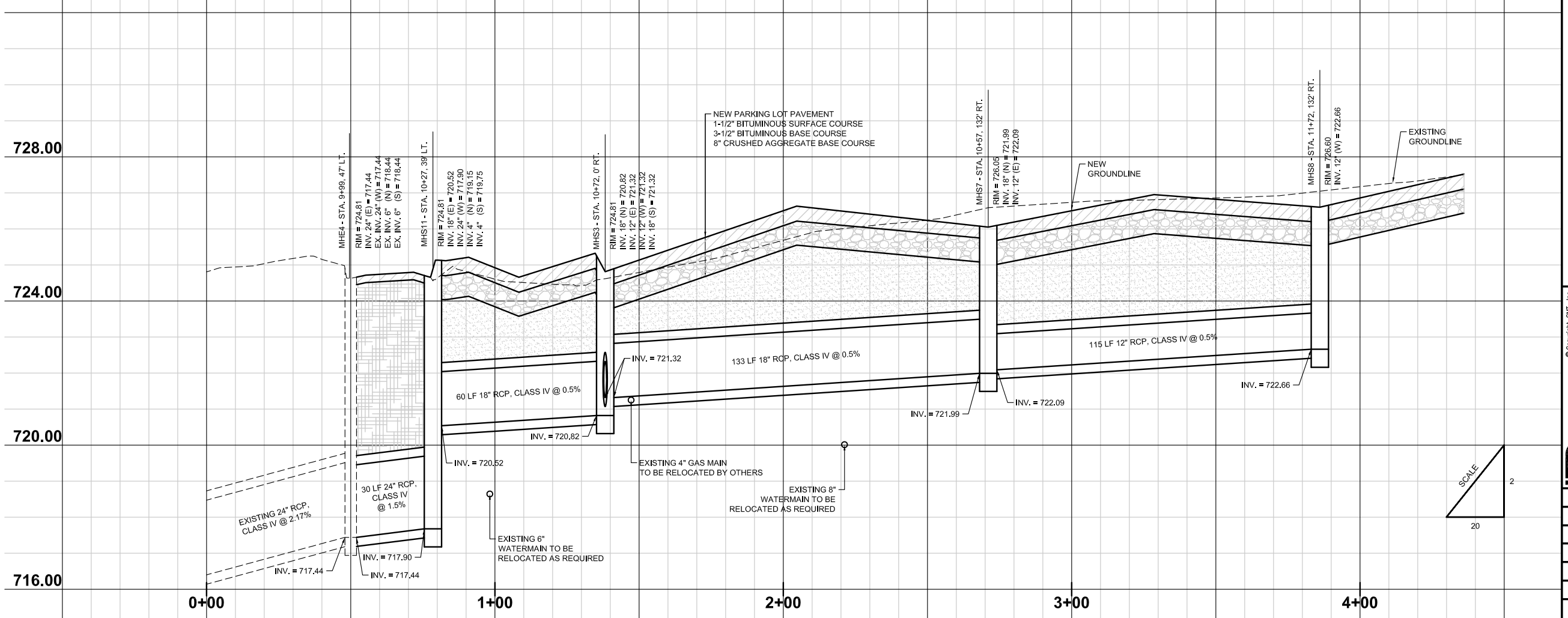

STORM LINE 'B': MHE1 - MHS11 - MHS3 - MHS7 - MHS8

IL. CONTRACT: **RO022**
IL. LETTING ITEM: **4A**
IL. PROJECT: **RFD-4187**
A.I.P. PROJECT:

SURVEY BOOK # 12258-02-00

REVISIONS		
NUMBER	BY	DATE

0 1 2
THIS BAR IS EQUAL TO 2" AT FULL SCALE (34X22).

GREATER ROCKFORD AIRPORT AUTHORITY
CHICAGO ROCKFORD INTERNATIONAL AIRPORT
ROCKFORD, IL

EAST TERMINAL AUTO PARKING LOT, PHASE 1

STORM SEWER PROFILES - SHEET 1

© Copyright CMT, Inc.

CMT
CRAWFORD, MURPHY & TILLY, INC.
CONSULTING ENGINEERS
License No. 184-000613

DESIGN BY:	SMS
DRAWN BY:	CMT
CHECKED BY:	MLK/SMS
APPROVED BY:	DLP
DATE:	07/06/2012
JOB No:	12285-02-00/06

FINAL

SHEET 17 OF 31 SHEETS

XREF DWG: tb.dwg
tbcint.dwg
IMAGE FILES: RFD Airport logo-CMYK.jpg
UPDATE BY: Sean Smith
LAYOUT: STORM PROFILES
DATE: Friday, July 06, 2012 13:36:08
FILE: K:\Rockford\12258-02_TermPkLotPH1\Draw\Sheets\STORM PROFILES.dwg

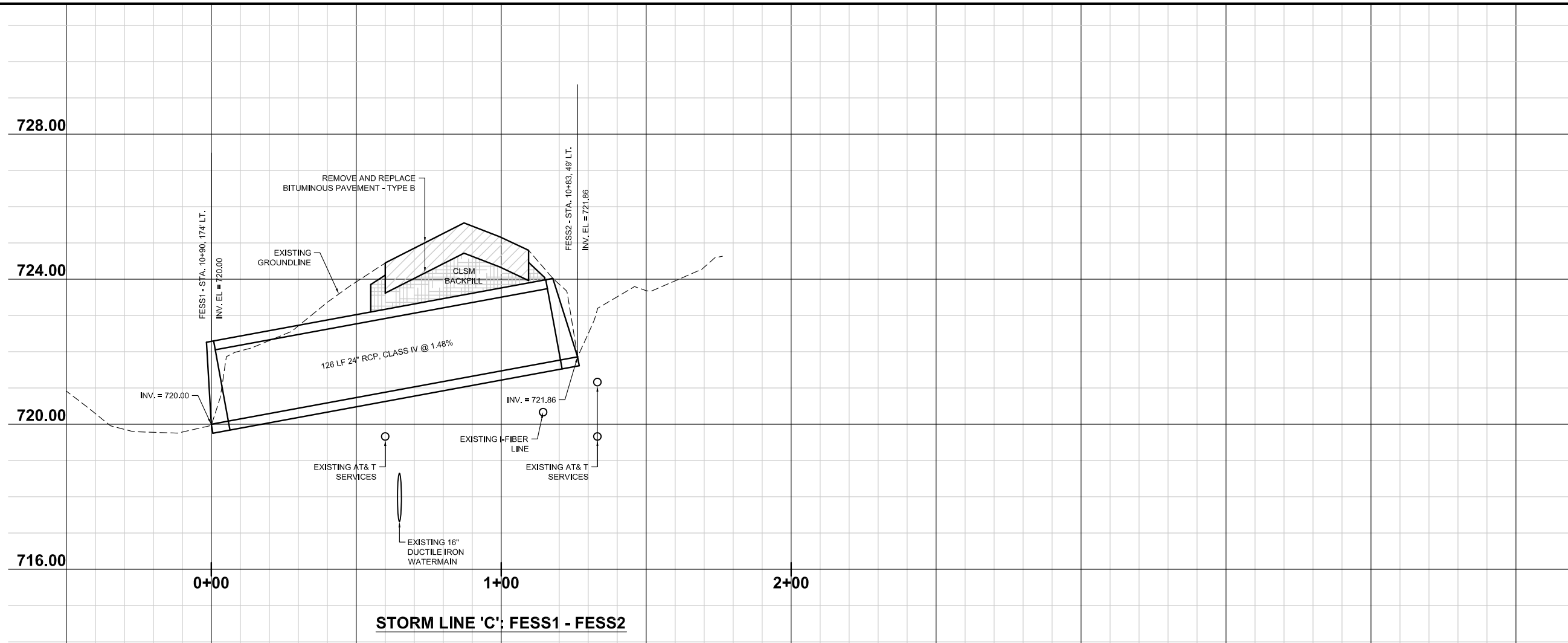

STORM LINE 'C': FESS1 - FESS2

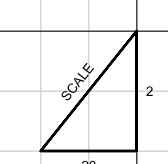

IL. CONTRACT: **RO022**
IL. LETTING ITEM: **4A**
IL. PROJECT: **RFD-4187**
A.I.P. PROJECT:

SURVEY BOOK # 12258-02-00

REVISIONS

NUMBER	BY	DATE

0 1 2
THIS BAR IS EQUAL TO 2" AT FULL SCALE (34X22).

GREATER ROCKFORD AIRPORT AUTHORITY
CHICAGO ROCKFORD INTERNATIONAL AIRPORT
ROCKFORD, IL

EAST TERMINAL AUTO PARKING LOT, PHASE 1

STORM SEWER PROFILES - SHEET 2

© Copyright CMT, Inc.

CMT
CRAWFORD, MURPHY & TILLY, INC.
CONSULTING ENGINEERS
License No. 184-000613

DESIGN BY:	SMS
DRAWN BY:	CMT
CHECKED BY:	MLK/SMS
APPROVED BY:	DLP
DATE:	07/06/2012
JOB No:	12285-02-00/06

FINAL

SHEET 18 OF 31 SHEETS

XREF DWG: tb.dwg
tbcint.dwg
IMAGE FILES: RFD Airport logo-CMYK.jpg
UPDATE BY: Sean Smith
LAYOUT: STORM PROFILES
DATE: Friday, July 06, 2012 13:37:09
FILE: K:\Rockford\12258-02_TermPkLotPH1\Draw\Sheets\STORM PROFILES 2.dwg

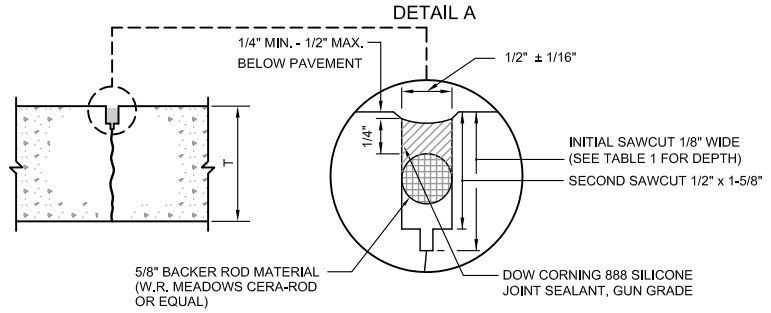

TYPE H DUMMY

NOT TO SCALE

CONTRACTION JOINT DETAIL

NOT TO SCALE

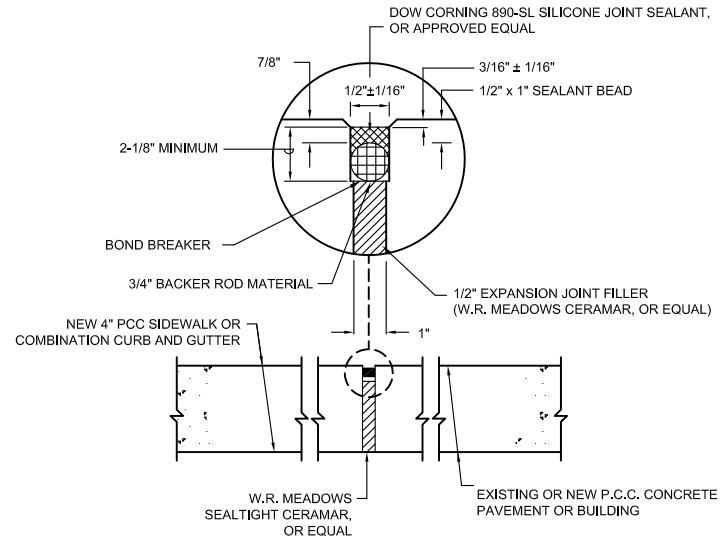

EXPANSION JOINT DETAIL

NOT TO SCALE

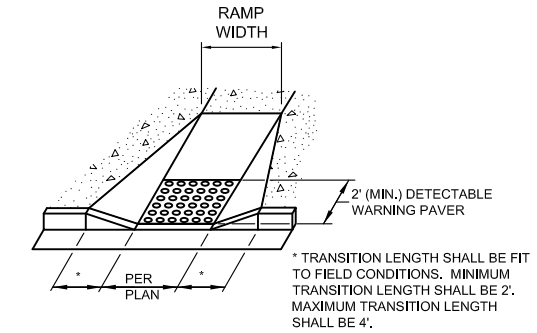

SIDEWALK RAMPS

NOT TO SCALE

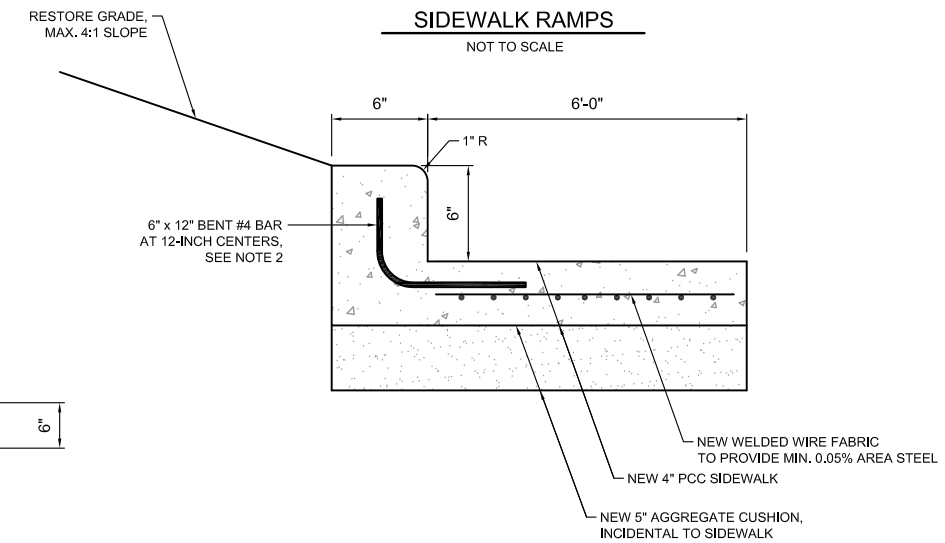

NOTES:

1. CURB TO BE PAID UNDER AR754210, CONCRETE CURB. CURB AND SIDEWALK MAY BE CONSTRUCTED AT THE SAME TIME.
2. IF THE CURB IS NOT CONSTRUCTED AT THE SAME TIME AS THE SIDEWALK, THE BENT BAR SHALL BE OMITTED AND AN EXPANSION JOINTS SHALL BE INSTALLED BETWEEN THE CURB AND THE SIDEWALK. THE EXPANSION JOINT SHALL BE SEALED.
3. JOINTS IN THE CURB SHALL MATCH THE JOINTS IN THE SIDEWALK IF CONSTRUCTED CONCURRENTLY.
4. AGGREGATE CUSHION SHALL BE CONSIDERED INCIDENTAL TO THE SIDEWALK AND THE CURB.
5. RESTORATION OF THE EXISTING GRADE BEHIND THE CURB SHALL BE CONSIDERED INCIDENTAL TO THE CURB. THE RESTORED AREA SHALL BE SODDED IN ACCORDANCE WITH ITEM AR904510.

AR501604 NEW 4" PCC SIDEWALK
ADJACENT TO AR754210 CONCRETE CURB

NOT TO SCALE

SIDEWALK AND CURB NOTES:

1. SIDEWALK RAMP CONSTRUCTION, INCLUDING DETECTABLE WARNING PAVERS, SHALL BE INCIDENTAL TO ITEM AR501604.
2. CONTRACTION JOINTS ARE REQUIRED IN THE NEW CURB AND SIDEWALK CONSTRUCTION. EXPANSION JOINTS SHALL BE SEALED WITH SILICONE CAULK, DOW CORNING 890-SL, OR APPROVED EQUAL.
3. 1/2" EXPANSION JOINT IS REQUIRED AT THE BACK OF CURB WHERE IT ABUTS NEW SIDEWALK.
4. 1/2" EXPANSION JOINTS SPACED A MAXIMUM OF 30 FEET ON CENTERS ARE REQUIRED IN THE NEW SIDEWALK. THE EXPANSION JOINT WILL BE IN PLACE OF A CONTRACTION JOINT AT THAT LOCATION. EXPANSION JOINTS WILL BE PLACED AT THE END OF EACH DAY'S PLACEMENT IN THE SIDEWALK CONSTRUCTION.
5. ALL EDGES OF NEW SLABS, FREE STANDING OR CLOSURE, SHALL BE EDGED WITH AN APPROVED TOOL HAVING A RADIUS OF 1/8" TO 1/4" TO FACILITATE SAWING OF THE SEALANT RESERVOIR. A RADIUS > 1/4" WILL NOT BE ACCEPTABLE.
6. THE INITIAL SAWCUT FOR ALL LONGITUDINAL AND TRANSVERSE CONTRACTION JOINTS SHALL BE SAWED AS SOON AS POSSIBLE AFTER PLACEMENT OF THE PAVEMENT. SAWING OF LONGITUDINAL CONTRACTION JOINTS ADJACENT TO THE THICKENED EDGES SHALL BE GIVEN PRIORITY OVER OTHER LONGITUDINAL JOINT SAWING.
7. ALL TIE BARS AND MESH SHALL BE SECURELY HELD IN PLACE BY SUPPORT PINS OR PLACED BY OTHER APPROVED METHODS TO PREVENT SHIFTING DURING AND AFTER CONCRETE PLACEMENT.
8. THE INITIAL SAWCUT SHALL BE MADE TO THE 1/8" WIDTH INDICATED. INITIAL SAWING TO THE DIMENSION OF THE SECOND SAWCUT WILL NOT BE ALLOWED.
9. JOINTS SHALL BE DRY AND CLEAN BEFORE SEALING OPERATIONS BEGIN.
10. COST OF ALL JOINT SAWING, CLEANING AND SEALING OF NEW CONCRETE PAVEMENT SHALL BE CONSIDERED INCIDENTAL TO THE ASSOCIATED PAY ITEM AND NO SEPARATE PAYMENT SHALL BE MADE.
11. CONSTRUCTION JOINTS IN THE COMBINATION CURB AND GUTTER SHALL BE DOWELED. AN EXPANSION JOINT SHALL BE PROVIDED IN THE COMBINATION CURB AND GUTTER AT A MINIMUM OF 100-FOOT ON CENTER. ALL CONTRACTION JOINTS AND EXPANSION JOINTS IN THE SIDEWALK SHALL BE IN ACCORDANCE WITH IDOT STANDARD 60601-04, LATEST REVISION.
12. CONTRACTOR SHALL CONSTRUCT A 1/4" CHAMFER ON ALL CONCRETE JOINTS AT NO ADDITIONAL COST.
13. TRANSVERSE JOINTS IN THE 4" PCC SIDEWALK SHALL BE TOOLED. THE RESIDENT ENGINEER SHALL APPROVE OF THE TOOLING METHOD PRIOR TO CONSTRUCTION.
14. JOINTS IN THE 6" PCC SIDEWALK PAVEMENT SHALL BE SAWN AS SHOWN IN THE JOINT DETAILS. JOINTS SHALL BE SEALED WITH SILICONE CAULK, DOW CORNING 888, OR APPROVED EQUAL.

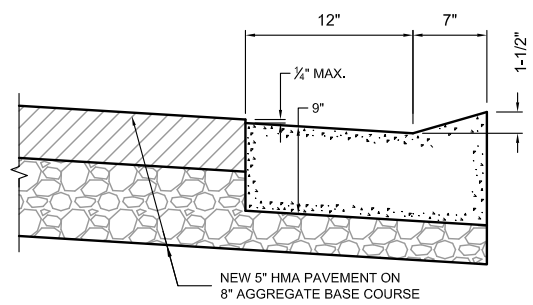

DEPRESSED

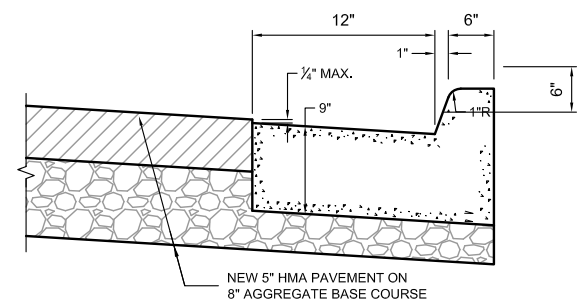

BARRIER

NEW AR754410 COMB. CONCRETE CURB AND GUTTER

NOT TO SCALE

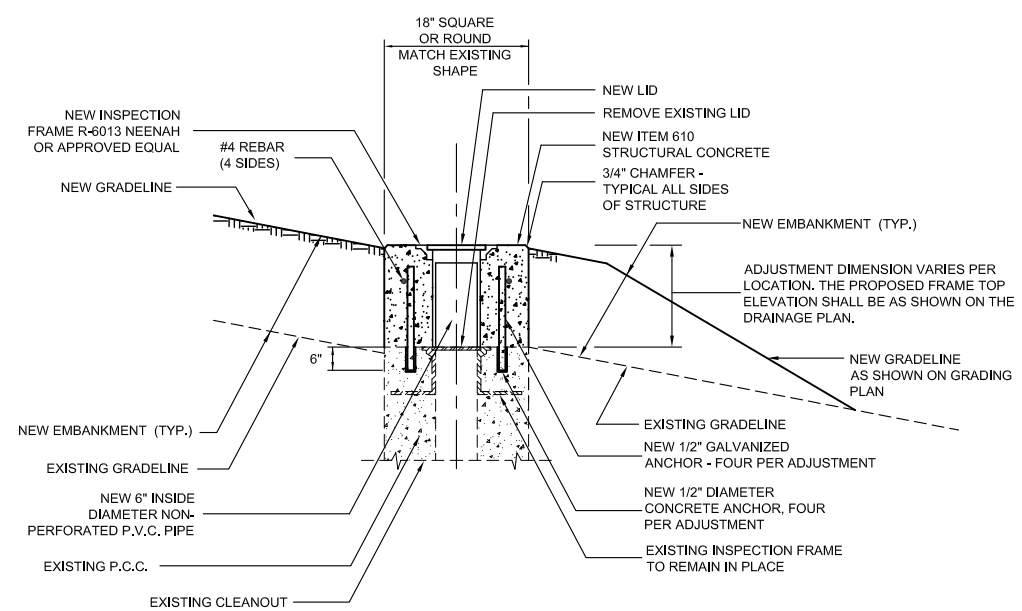

METHOD OF CONSTRUCTION

1. ADJUST TURF ISLAND TO GRADE.
2. EXCAVATE CLEANOUT/INSPECTION HOLE AND ADJUST TO PROPER GRADE.
3. BACKFILL EXCAVATED MATERIAL.

CLEANOUT ADJUSTMENT - IN TURF DETAIL

NOT TO SCALE

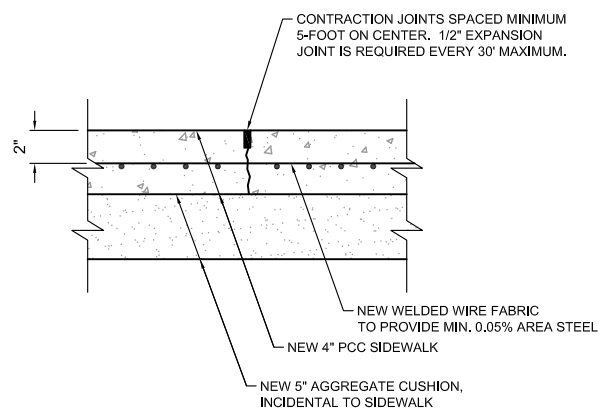

NOTES:

1. AGGREGATE CUSHION SHALL BE CONSIDERED INCIDENTAL TO THE SIDEWALK.
2. RESTORATION OF THE EXISTING GRADE BEHIND THE SIDEWALK SHALL BE CONSIDERED INCIDENTAL TO THE SIDEWALK. THE RESTORED AREA SHALL BE SODDED IN ACCORDANCE WITH ITEM AR904510.

AR501604 NEW 4" PCC SIDEWALK

NOT TO SCALE

TABLE 1

PAVEMENT THICKNESS T - INCHES	DEPTH OF CONTRACTION JOINT INITIAL SAW CUT I, INCHES I=(T/4) ±1/4"
5	1.25"
6	1.50"
7	1.75"
8	2.00"
9	2.25"
10	2.50"
11	2.75"
12	3.00"
13	3.25"
14	3.50"
15	3.75"
16	4.00"
17	4.25"
18	4.50"

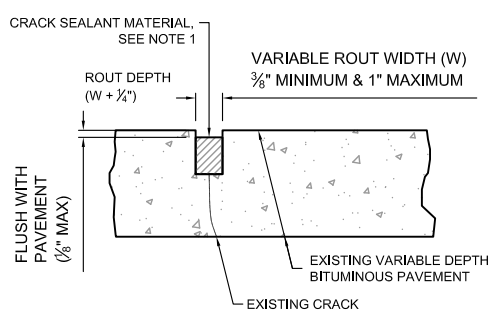

CLEAN & SEAL BITUMINOUS CRACKS (AR201661)

NOT TO SCALE

CRACK SEALING NOTES:

1. THE CRACK ROUTING DIMENSIONS SHALL PROVIDE A WIDTH TO DEPTH RATIO OF 1:1 FOR SEALANT MATERIAL.
2. CRACKS TO BE ROUTED, CLEANED AND SEALED AT LOCATIONS DESIGNATED BY THE RESIDENT ENGINEER.

IL. CONTRACT: **RO022**
IL. LETTING ITEM: **4A**
IL. PROJECT: **RFD-4187**
A.I.P. PROJECT:

SURVEY BOOK # 12258-02-00

REVISIONS

NUMBER	BY	DATE

0 1 2
THIS BAR IS EQUAL TO 2" AT FULL SCALE (34X22).

GREATER ROCKFORD AIRPORT AUTHORITY
CHICAGO ROCKFORD INTERNATIONAL AIRPORT
ROCKFORD, IL

EAST TERMINAL AUTO PARKING LOT, PHASE 1

PAVING DETAILS

© Copyright CMT, Inc.

CMT
CRAWFORD, MURPHY & TILLY, INC.
CONSULTING ENGINEERS
License No. 184-000613

DESIGN BY:	SMS
DRAWN BY:	CMT
CHECKED BY:	MLK/SMS
APPROVED BY:	DLP
DATE:	07/06/2012
JOB No:	12285-02-00/06

FINAL

SHEET 19 OF 31 SHEETS

XREF DWG: tb.dwg
tbcint.dwg
IMAGE FILES: RFD Airport logo-CMYK.jpg
UPDATE BY: Sean Smith
LAYOUT: PAVINGDETAILS
DATE: Friday, July 06, 2012 13:37:39
FILE: K:\Rockford\12258-02_TermPkLotPH1\Draw\Sheets\PAVINGDETAILS.dwg

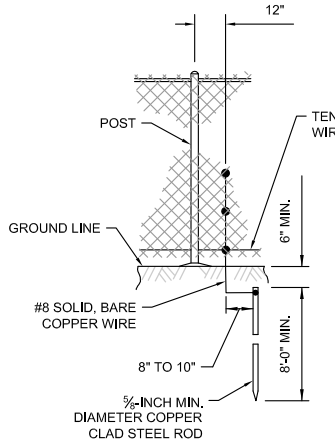

STANDARD GROUND

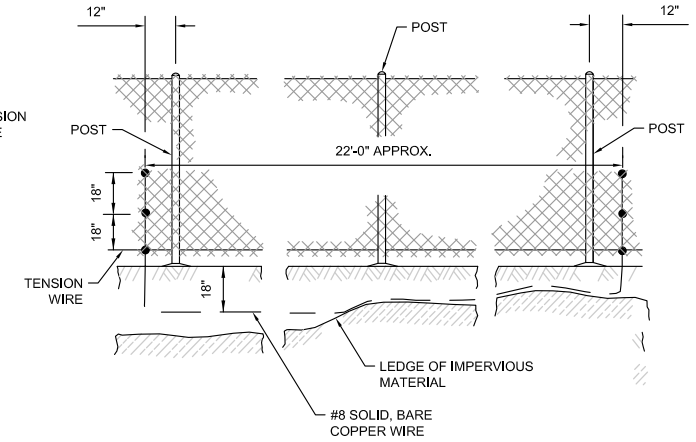

COUNTERPOISE GROUND (ALTERNATE)

ELECTRICAL GROUNDING NOTES:

1. CONTINUOUS FENCE SHALL BE GROUNDED AT INTERVALS NOT EXCEEDING 1000' EXCEPT THERE SHALL BE A GROUND NOT EXCEEDING 100 FT. FROM A GATE IN EACH SECTION OF THE FENCE ADJACENT TO THE GATE.
2. FENCE UNDER POWER LINE SHALL BE GROUNDED BY THREE GROUNDS, ONE DIRECTLY UNDER THE CROSSING AND ONE ON EACH SIDE 25 TO 50 FT. AWAY. A SINGLE GROUND SHALL BE LOCATED DIRECTLY UNDER EACH TELEPHONE WIRE OR CABLE CROSSING.
3. THE COUNTERPOISE SHALL BE USED ONLY WHERE IT IS IMPOSSIBLE TO DRIVE A GROUND ROD BECAUSE OF AN IMPERVIOUS EARTH STRUCTURES.
4. THE GROUND WIRE SHALL BE CONNECTED TO THE FABRIC AND THE GROUND ROD BY A MECHANICAL CLAMP OF CAST BRONZE BODY AND BRONZE OR STAINLESS STEEL BOLTS AND WASHERS. WHEN A TENSION WIRE IS REQUIRED, THE BOTTOM CONNECTION OF THE GROUND WIRE SHALL BE MADE TO THE TENSION WIRE.

PROTECTIVE ELECTRICAL GROUNDS

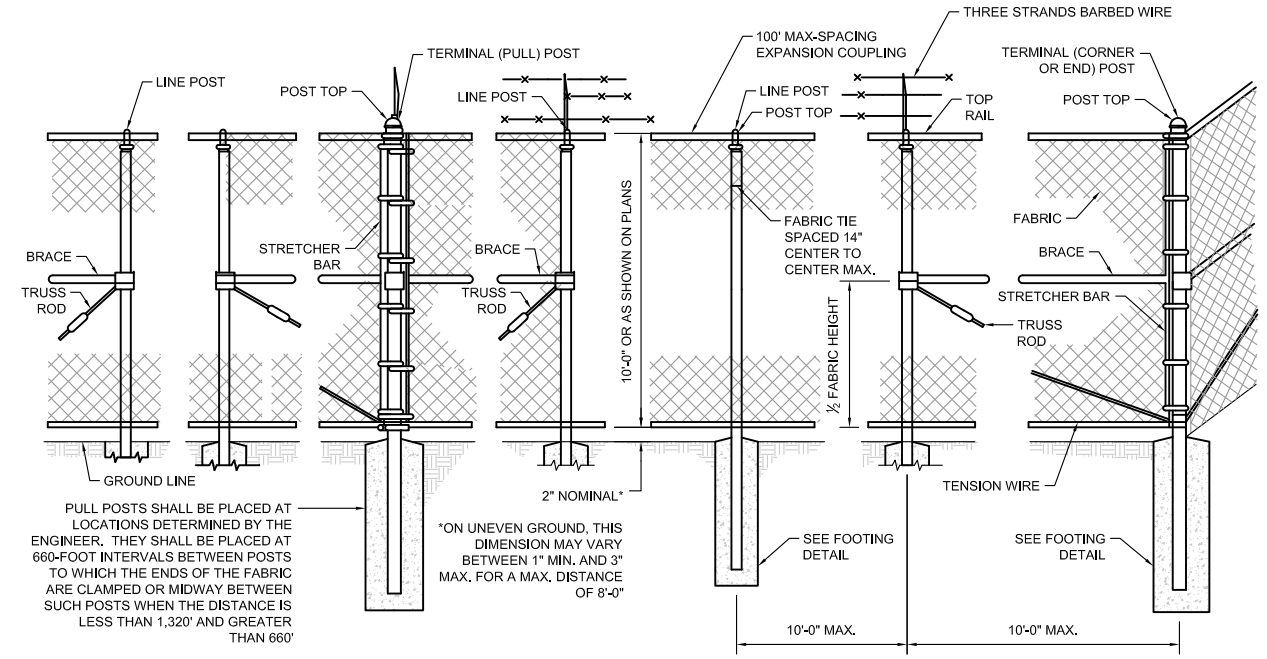

PULL POST ARRANGEMENT

LINE POST ARRANGEMENT

CORNER OR END POST ARRANGEMENT

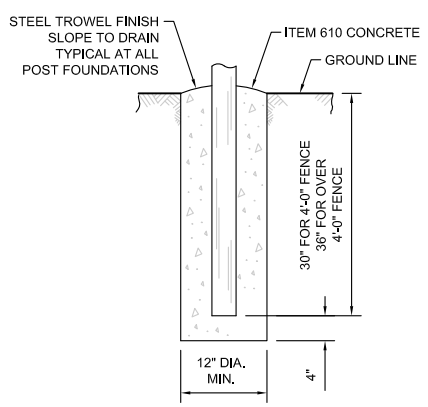

FOOTING FOR LINE POST

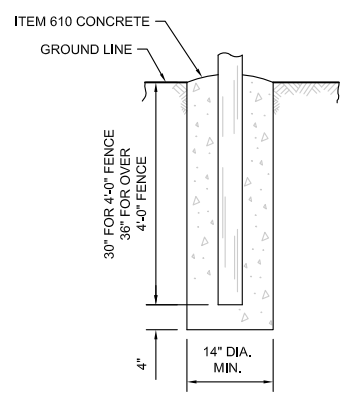

FOOTING FOR GATE & TERMINAL POST

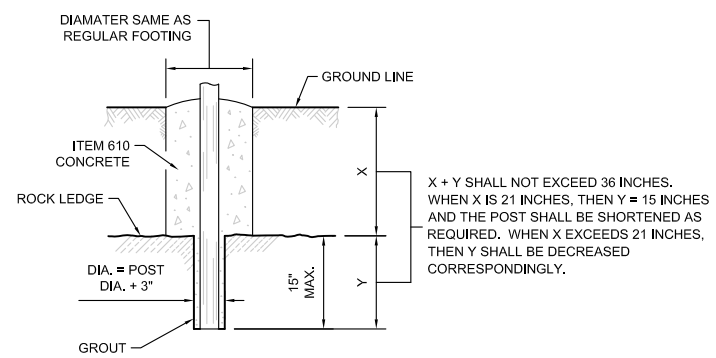

FOOTING FOR POST IN ROCK LEDGE

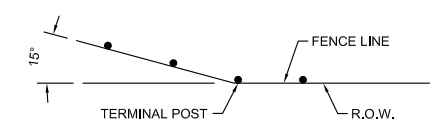

NOTES:

WHEN THE FENCE LINE HAS A CHANGE IN DIRECTION OF 15° OR MORE, A TERMINAL POST SHALL BE PLACED AS SHOWN ABOVE.

WHERE THE ANGLE IS LESS THAN 15° AND EXISTING CONDITIONS REQUIRE A TERMINAL POST, THEY SHALL BE PLACED AS DIRECTED BY THE ENGINEER.

INSTALLATION AT CORNERS

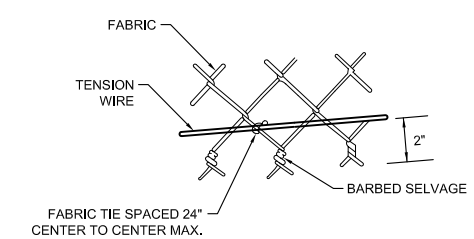

METHOD OF TYING FABRIC TO TENSION WIRE

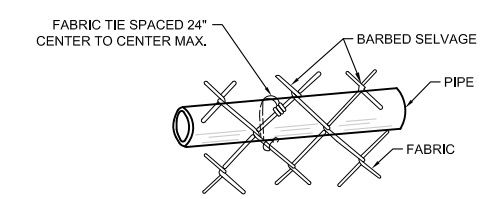

METHOD OF TYING FABRIC TO PIPE

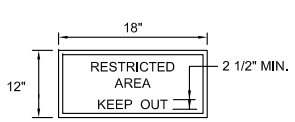

NOTES:

1. EVERY 100' OF FENCE SHALL REQUIRE ONE "RESTRICTED" SIGN. COST INCIDENTAL TO FENCE.
2. 0.08 GA ALUMINUM ALLOY SHEET. LETTERING SHALL BE RED ON A WHITE BACKGROUND.
3. EXISTING SIGNS MAY BE REUSED AT THE DISCRETION OF THE RESIDENT ENGINEER.
4. EXISTING SIGNAGE SHALL BE REMOVED FROM THE EXISTING FENCE PRIOR TO REMOVAL, AND THE SIGNS SHALL BE REATTACHED TO THE NEW FENCE. THIS WORK SHALL BE CONSIDERED INCIDENTAL TO THE FENCE REMOVAL AND INSTALLATION.

SIGN DETAILS

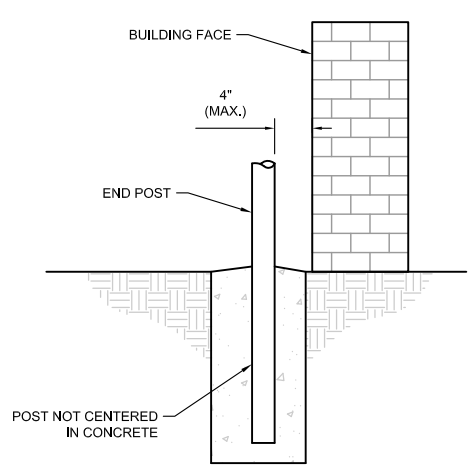

FENCE INSTALLATION AT BUILDING FACE

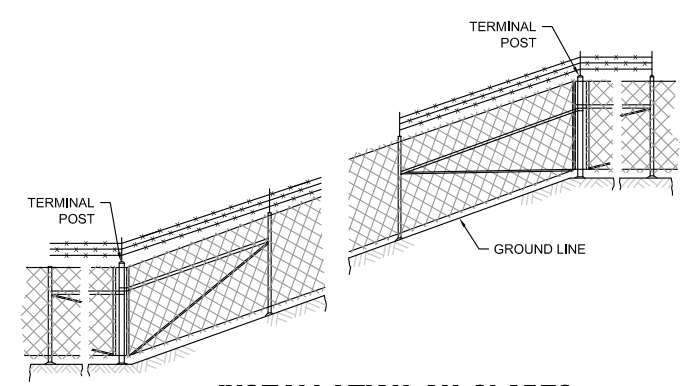

INSTALLATION ON SLOPES

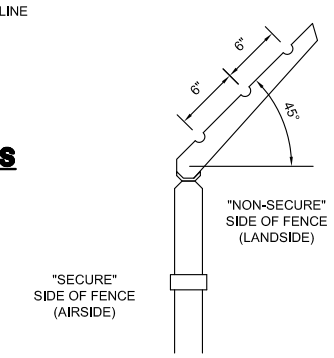

DETAIL - BARBED WIRE ARM ON LINE POST

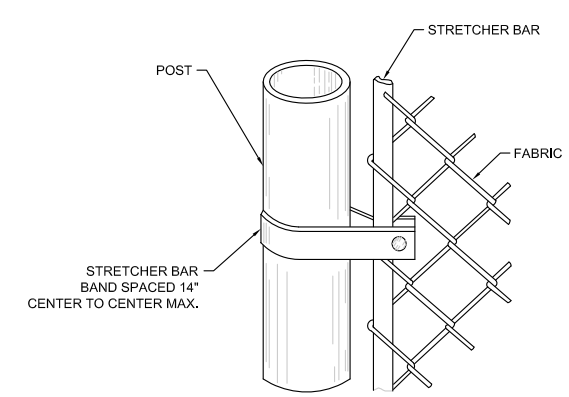

METHOD OF FASTENING STRETCHER BAR TO POST

IL. CONTRACT: **RO022**
IL. LETTING ITEM: **4A**
IL. PROJECT: **RFD-4187**
A.I.P. PROJECT:

SURVEY BOOK # 12258-02-00

REVISIONS

NUMBER	BY	DATE

0 1 2
THIS BAR IS EQUAL TO 2" AT FULL SCALE (34X22).

GREATER ROCKFORD AIRPORT AUTHORITY
CHICAGO ROCKFORD INTERNATIONAL AIRPORT
ROCKFORD, IL

EAST TERMINAL AUTO PARKING LOT, PHASE 1

FENCING DETAILS

© Copyright CMT, Inc.

CMT
CRAWFORD, MURPHY & TILLY, INC.
CONSULTING ENGINEERS
License No. 184-000613

DESIGN BY:	SMS
DRAWN BY:	CMT
CHECKED BY:	MLK/SMS
APPROVED BY:	DLP
DATE:	07/06/2012
JOB No:	12285-02-00/06

FINAL

XREF DWG: tb.dwg
tbcint.dwg
IMAGE FILES: RFD Airport logo-CMYK.jpg
UPDATE BY: Sean Smith
LAYOUT: FENCE DETAILS
DATE: Friday, July 06, 2012 13:38:10
FILE: K:\Rockford\12258-02_TermPkLotPH1\Draw\Sheets\FENCE DETAILS.dwg

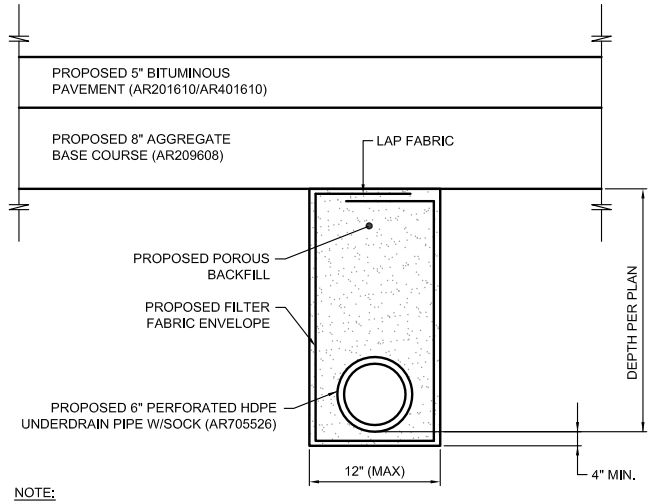

NOTE:

EXCAVATION, FILTER FABRIC ENVELOPE, POROUS BACKFILL, PIPE AND SOCK, SHALL BE INCIDENTAL TO 6" PERFORATED UNDERDRAIN W/SOCK (AR705526).

UNDERDRAIN DETAIL

NOT TO SCALE

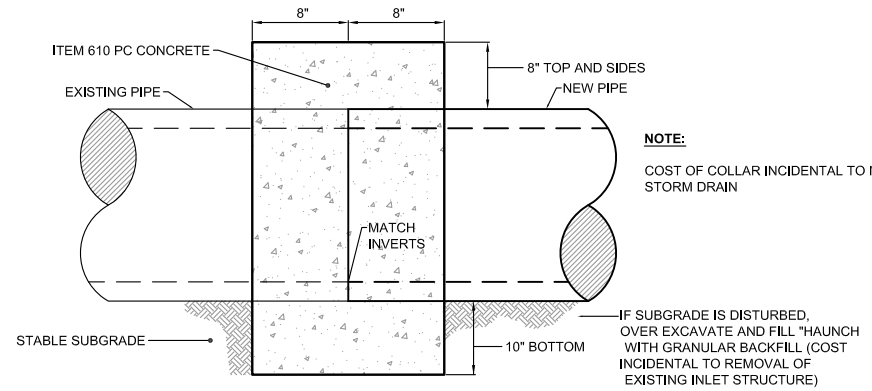

NOTE:

COST OF COLLAR INCIDENTAL TO NEW STORM DRAIN

CONCRETE COLLAR - SEWER EXTENSION

NOT TO SCALE

INSIDE DIAMETER OF STORM SEWER (INCHES)	MAXIMUM TRENCH WIDTH
6	3'-7"
8	3'-9"
12	4'-2"
15	4'-6"
18	4'-9"
21	5'-0"
24	5'-4"
27	5'-7"
30	5'-11"
36	6'-6"
42	7'-1"
48	7'-8"
54	8'-3"
60	9'-0"
66	9'-7"

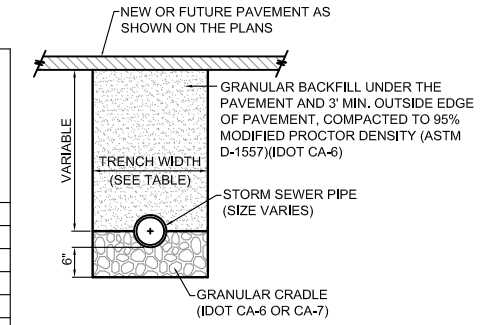

PAVED AREAS

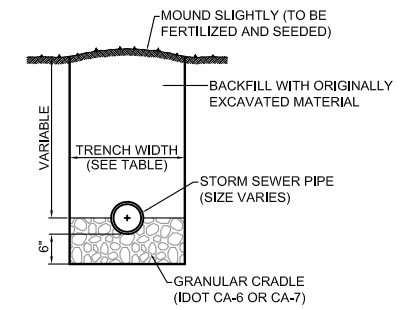

NON-PAVED AREAS

TRENCH DETAILS - STORM SEWER

NOT TO SCALE

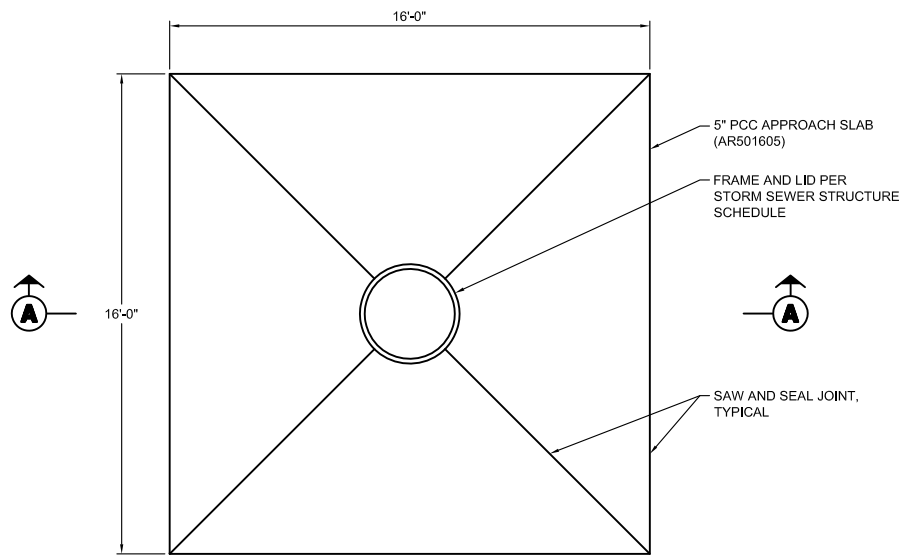

PLAN VIEW

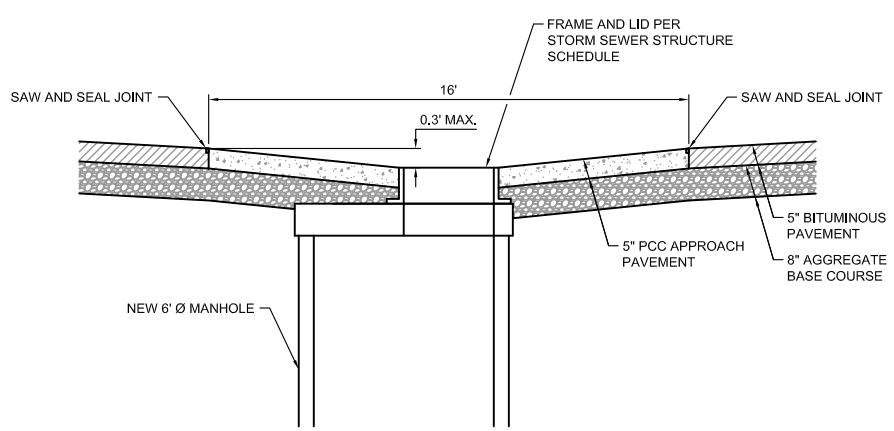

SECTION A-A

MANHOLE APPROACH SLAB

NOT TO SCALE

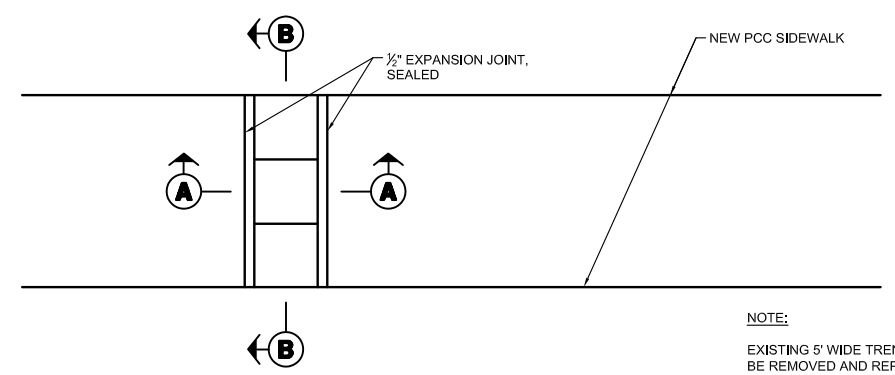

PLAN VIEW

NOTE:

EXISTING 5' WIDE TRENCH FRAME AND LID SHALL BE REMOVED AND REPLACED WITH A 6' LONG TRENCH FRAME AND LID. REMOVAL AND REPLACEMENT TO BE PAID FOR UNDER ITEM AR751927 REPLACE FRAME AND GRATE, PER EACH.

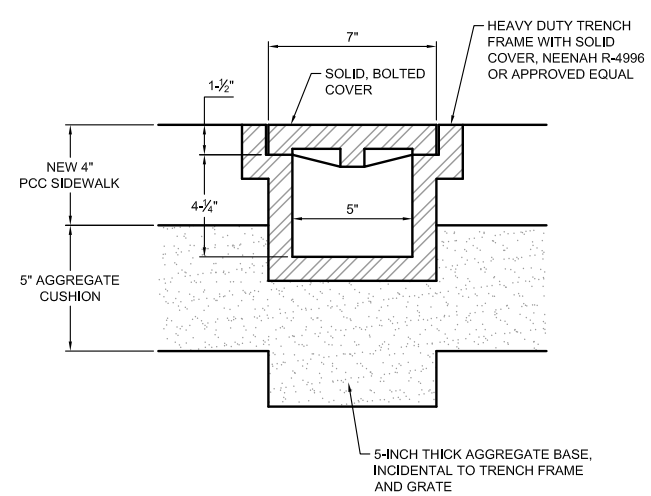

SECTION A-A

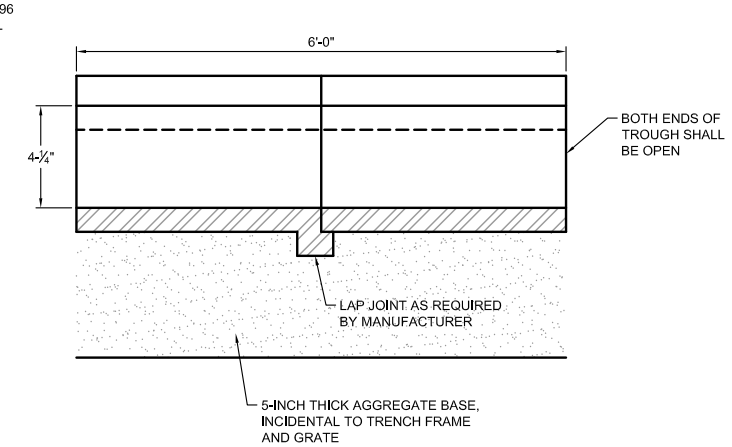

SECTION B-B

TRENCH FRAME AND GRATE

NOT TO SCALE

IL. CONTRACT: **RO022**
IL. LETTING ITEM: **4A**
IL. PROJECT: **RFD-4187**
A.I.P. PROJECT:

SURVEY BOOK # 12258-02-00

REVISIONS

NUMBER	BY	DATE

0 1 2
THIS BAR IS EQUAL TO 2" AT FULL SCALE (34X22).

GREATER ROCKFORD AIRPORT AUTHORITY
CHICAGO ROCKFORD INTERNATIONAL AIRPORT
ROCKFORD, IL

EAST TERMINAL AUTO PARKING LOT, PHASE 1

DRAINAGE DETAILS

© Copyright CMT, Inc.

CMT
CRAWFORD, MURPHY & TILLY, INC.
CONSULTING ENGINEERS
License No. 184-000613

DESIGN BY:	SMS
DRAWN BY:	CMT
CHECKED BY:	MLK/SMS
APPROVED BY:	DLP
DATE:	07/06/2012
JOB No:	12285-02-00/06

FINAL

SHEET 21 OF 31 SHEETS

XREF DWG: tb.dwg
tbcint.dwg
IMAGE FILES: RFD Airport logo-CMYK.jpg
UPDATE BY: Sean Smith
LAYOUT: DRAINAGEDETAILS
DATE: Friday, July 06, 2012 13:38:39
FILE: K:\RockfordAp\12258-02_TermPkLotPH1\Draw\Sheets\DRAINAGEDETAILS.dwg

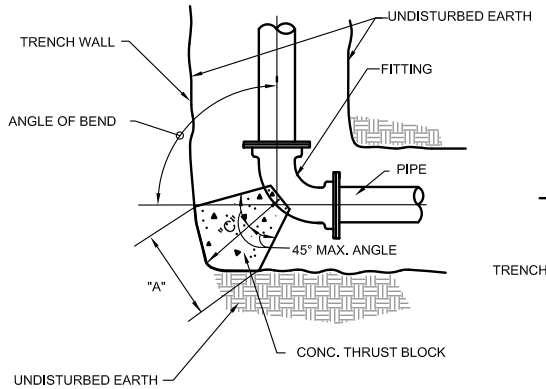

PLAN OF BEND

N.T.S.

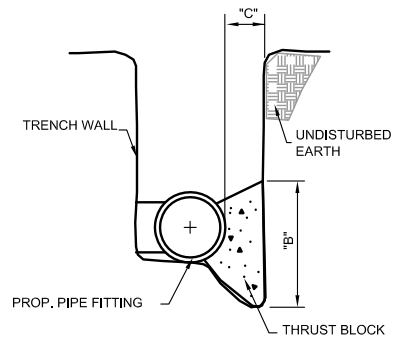

SECTION

N.T.S.

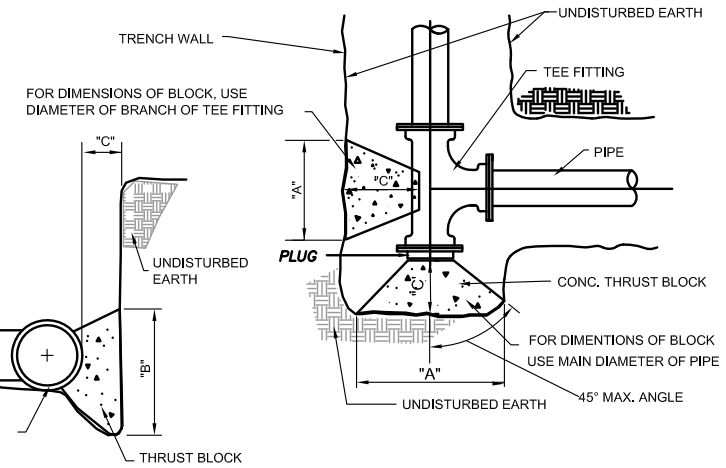

PLAN OF TEE

N.T.S.

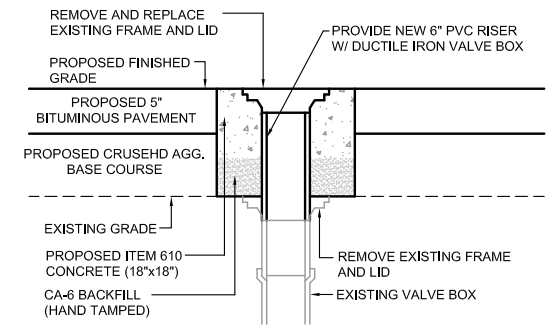

ADJUST VALVE BOX

N.T.S.

SIZE	90° BEND			45° BEND			22-1/2° BEND			11-1/4° BEND			TEE OR PLUG		
	A	B	C	A	B	C	A	B	C	A	B	C	A	B	C
4"& 6"	2'-0"	1'-4"	9"	1'-6"	1'-0"	6"	1'-1"	0'-8"	6"	0'-9"	0'-6"	6"	2'-5"	1'-7"	1'-0"
8"	2'-8"	1'-10"	1'-0"	2'-0"	1'-4"	8"	1'-5"	1'-0"	8"	1'-0"	0'-8"	8"	3'-2"	2'-2"	1'-3"
10"	3'-4"	2'-3"	1'-3"	2'-6"	1'-8"	10"	1'-9"	1'-2"	8"	1'-3"	0'-10"	8"	4'-0"	2'-8"	1'-7"
12"	4'-0"	2'-8"	1'-6"	3'-0"	2'-0"	1'-0"	2'-2"	1'-5"	8"	1'-6"	1'-0"	8"	4'-10"	3'-2"	1'-11"
14"	4'-8"	3'-2"	1'-9"	3'-6"	2'-4"	1'-2"	2'-6"	1'-8"	8"	1'-9"	1'-2"	8"	5'-7"	3'-9"	2'-3"
16"	5'-4"	3'-7"	2'-0"	3'-11"	2'-8"	1'-4"	2'-10"	1'-11"	9"	2'-0"	1'-4"	8"	6'-4"	4'-3"	2'-6"
18"	6'-0"	4'-0"	2'-3"	4'-5"	3'-0"	1'-6"	3'-2"	2'-2"	10"	2'-3"	1'-6"	8"	7'-2"	4'-9"	2'-10"
20"	6'-8"	4'-5"	2'-6"	4'-11"	3'-4"	1'-8"	3'-6"	2'-4"	11"	2'-6"	1'-8"	8"	7'-11"	5'-4"	3'-2"
24"	8'-0"	5'-4"	3'-0"	5'-11"	3'-11"	2'-0"	4'-3"	2'-10"	1'-1"	3'-0"	2'-0"	8"	9'-6"	6'-4"	3'-9"

100 P.S.I. TABLE

NOTES:

1. ALL BENDS, TEES, PLUGS, FITTINGS OR OTHER SIGNIFICANT CHANGES IN ALIGNMENT SHALL BE BRACED WITH POURED CONCRETE THRUST BLOCKS FITTINGS WITH RETAINING GLANDS WILL NOT BE ALLOWED.
2. "C' DIMENSION SHALL BE AS REQUIRED TO REACH UNDISTURBED EARTH BUT NOT LESS THAN VALUE LISTED IN TABLE.
3. DIMENSIONS "A" AND "B" ARE BASED ON INTERNAL PIPE PRESSURE OF 100 P.S.I. AND BEARING ON THE UNDISTURBED SOIL OF 1500 P.S.F.
4. "B"= HEIGHT OF THRUST BLOCK

THRUST BLOCK DETAILS

N.T.S.

INSIDE DIAMETER OF WATERMAIN (INCHES)	MAXIMUM TRENCH WIDTH
6	3'-7"
8	3'-9"
12	4'-2"
16	4'-6"
18	4'-9"
21	5'-0"
24	5'-4"
27	5'-7"
30	5'-11"

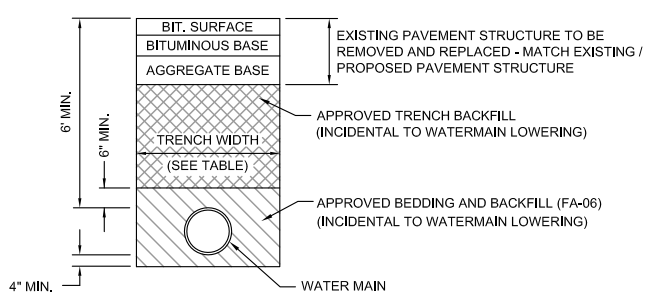

PAVED AREA TRENCH DETAIL

N.T.S.

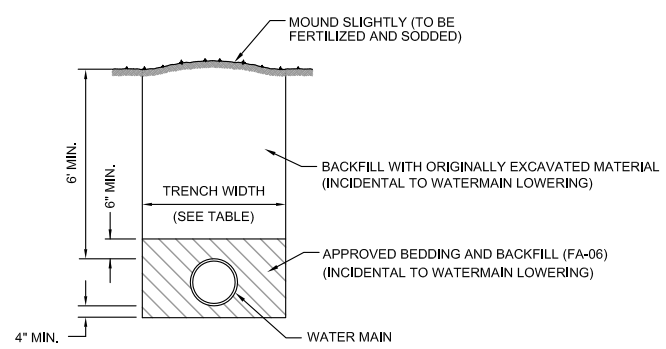

NON-PAVED AREA TRENCH DETAIL

N.T.S.

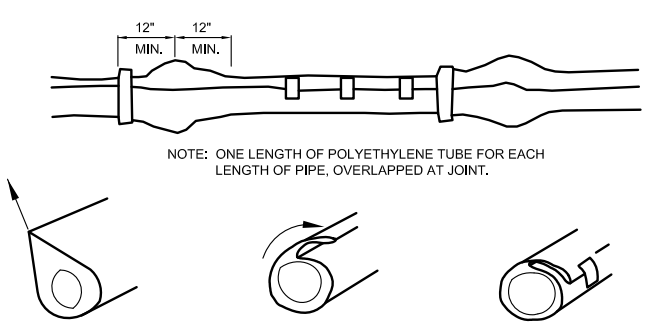

NOTE: ONE LENGTH OF POLYETHYLENE TUBE FOR EACH LENGTH OF PIPE, OVERLAPPED AT JOINT.

TAKE UP SLACK IN THE TUBE ALONG THE BARREL OF THE PIPE TO MAKE A SNUG, BUT NOT TIGHT, FIT.

FOLD EXCESS POLY-ETHYLENE BACK OVER THE TOP OF THE PIPE

SECURE THE FOLD AT SEVERAL LOCATIONS ALONG THE PIPE BARREL (APPROX. EVERY THREE FEET).

POLYETHYLENE ENCASEMENT

N.T.S.

NOTE: REPAIR ALL SMALL RIPS, TEARS OR OTHER TUBE DAMAGE WITH ADHESIVE TAPE.

IL. CONTRACT: **RO022**
IL. LETTING ITEM: **4A**
IL. PROJECT: **RFD-4187**
A.I.P. PROJECT:

SURVEY BOOK # 12258-02-00

REVISIONS

NUMBER	BY	DATE

0 1 2
THIS BAR IS EQUAL TO 2" AT FULL SCALE (34X22).

GREATER ROCKFORD AIRPORT AUTHORITY
CHICAGO ROCKFORD INTERNATIONAL AIRPORT
ROCKFORD, IL

EAST TERMINAL AUTO PARKING LOT, PHASE 1

WATER MAIN DETAILS

© Copyright, CMT, Inc.

CMT
CRAWFORD, MURPHY & TILLY, INC.
CONSULTING ENGINEERS
License No. 184-000613

DESIGN BY:	TLO/MLK
DRAWN BY:	CMT
CHECKED BY:	MLK/SMS
APPROVED BY:	DLP
DATE:	07/06/2012
JOB No:	12285-02-00/06

FINAL

XREF DWG: tb.dwg
tbcint.dwg
IMAGE FILES: RFD Airport logo-CMYK.jpg
UPDATE BY: Sean Smith
LAYOUT: UTILITYDETAILS
DATE: Friday, July 06, 2012 13:39:07
FILE: K:\RockfordAp\12258-02_TermPkLotPH1\Draw\Sheets\UTILITYDETAILS.dwg

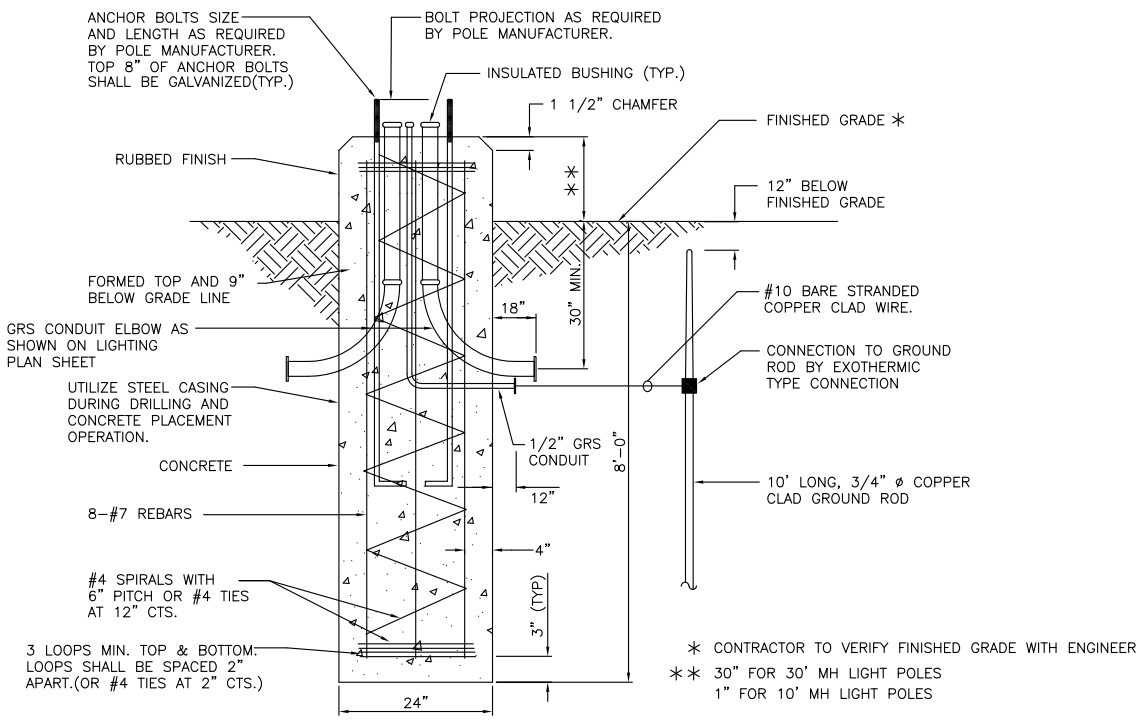

ELEVATIONS VIEW

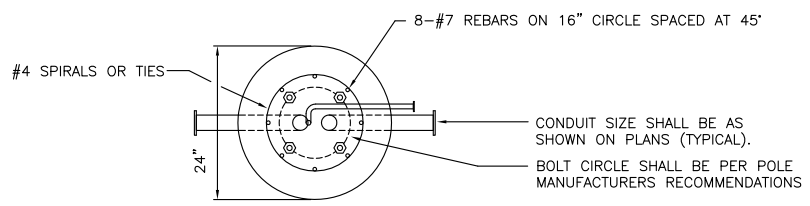

PLAN VIEW

LIGHT POLE FOUNDATION DETAIL

NOT TO SCALE

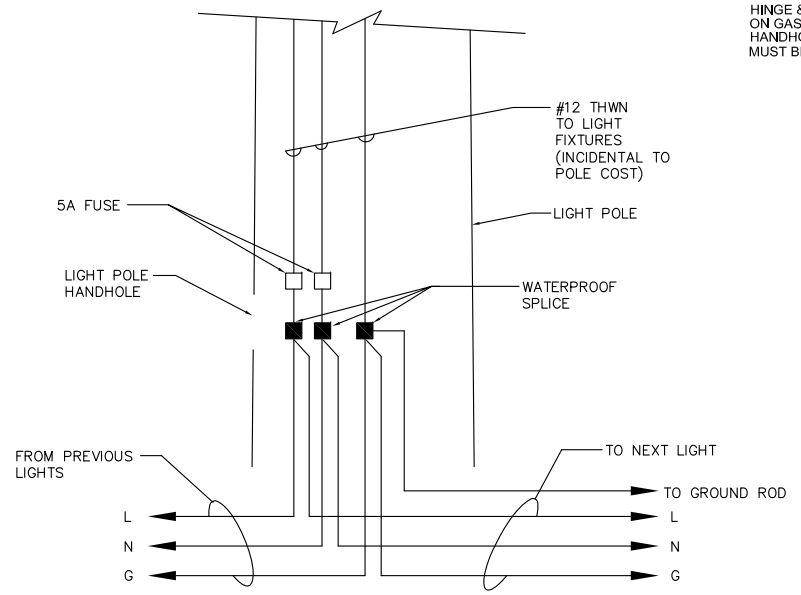

LIGHT POLE HANDHOLE WIRING DIAGRAM

NOT TO SCALE

NOTES:

1. ALL CONNECTIONS TO GROUND RODS SHALL BE MADE WITH ONE-SHOT EXOTHERMIC TYPE CONNECTORS.
2. TWO CIRCUITS REQUIRED FOR EACH LIGHT POLE.

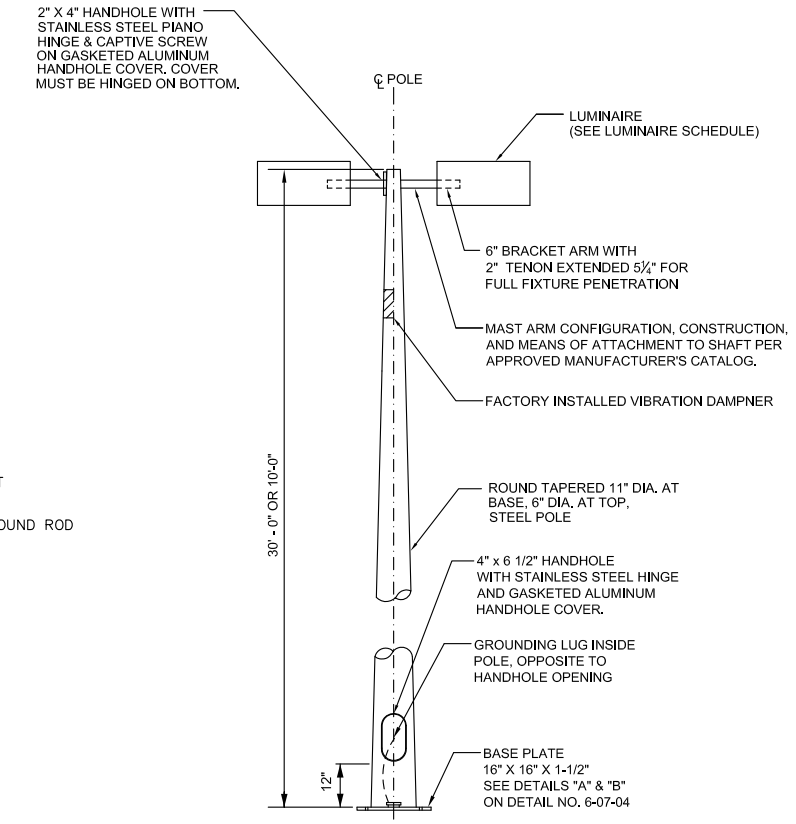

LIGHT POLE DETAIL

NOT TO SCALE

NOTES:

1. REFER TO EXTERIOR POLE MOUNTED CAMERA DETAIL FOR LIGHT POLES WITH CCTV CAMERAS.

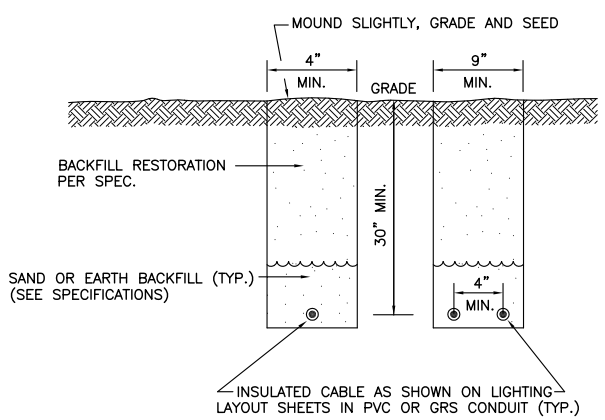

TRENCH DETAIL

NOT TO SCALE

NOTE: AT CONTRACTOR'S OPTION, CABLE PLOWING MAY BE USED IN LIEU OF TRENCHING.

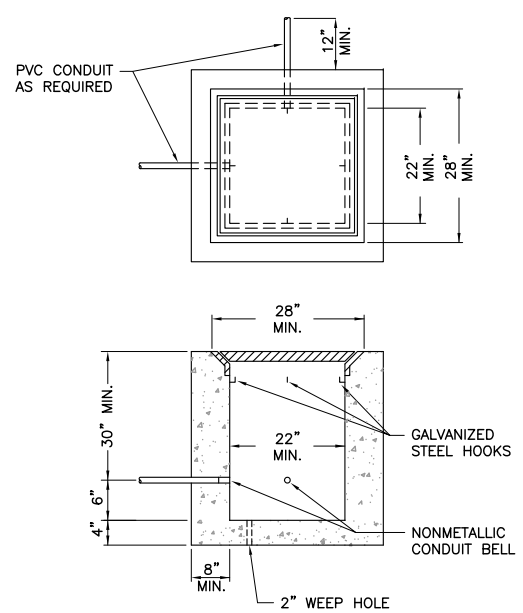

TYPE 2 ELECTRICAL/COMMUNICATION HANDHOLE DETAIL

NOT TO SCALE

NOTES:

1. CONDUIT ENTRANCES AND NUMBER OF CONDUITS SHALL BE AS SHOWN ON SITE PLAN VIEW.
2. FRAME AND LID SHALL BE NEENAH R-6662-KH OR EQUAL.
3. FRAME AND LID SHALL BE SUITABLE FOR H-20 LOADING.
4. COVER SHALL BE STAMPED "ELECTRICAL".

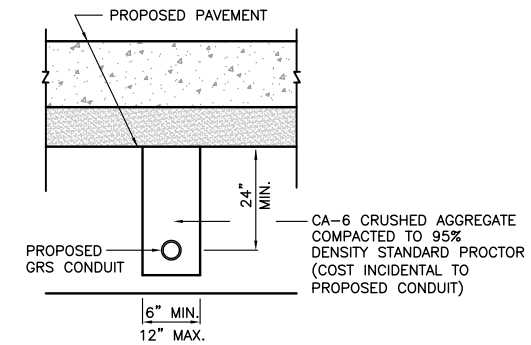

GRS CONDUIT UNDER P.C.C. PAVEMENT DETAIL

NOT TO SCALE

NEW DUCT BANK/CONDUIT SHALL BE INSTALLED AT AN ELEVATION THAT WILL NOT CONFLICT WITH EXISTING OR NEW UTILITIES INCLUDING STORM SEWER, UNDERDRAIN, CONDUIT, DUCT, GAS, WATERMAIN, PHONE, ELECTRICAL AT NO ADDITIONAL COST TO THE CONTRACT.

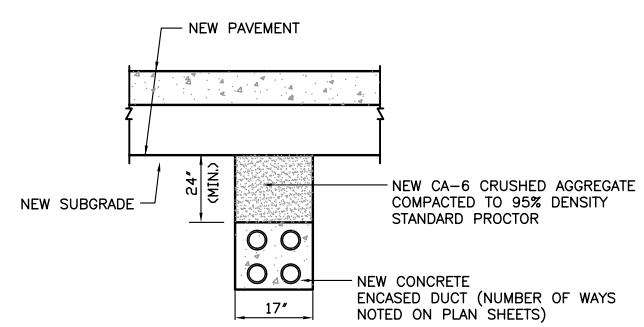

CONCRETE ENCASED DUCT BACKFILL

NOT TO SCALE

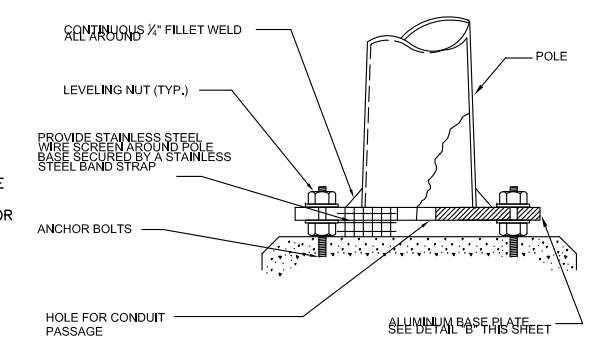

LIGHT POLE BASE DETAIL

NOT TO SCALE

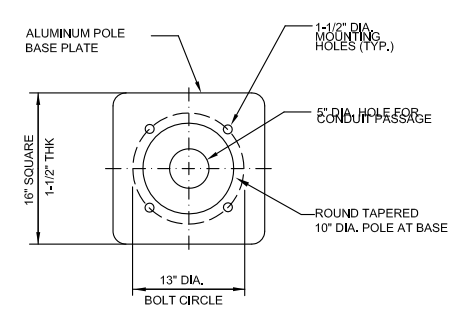

LIGHT POLE BASE PLAN

NOT TO SCALE

IL. CONTRACT: **RO022**
IL. LETTING ITEM: **4A**
IL. PROJECT: **RFD-4187**
A.I.P. PROJECT:

SURVEY BOOK # 12258-02-00

REVISIONS		
NUMBER	BY	DATE

0 1 2
THIS BAR IS EQUAL TO 2" AT FULL SCALE (34X22).

CHICAGO ROCKFORD INTERNATIONAL AIRPORT
ROCKFORD, IL
EAST TERMINAL AUTO PARKING LOT, PHASE 1

ELECTRICAL DETAILS - SHEET 1

© Copyright CMT, Inc.

CMT
CRAWFORD, MURPHY & TILLY, INC.
CONSULTING ENGINEERS
License No. 184-000613

DESIGN BY:	AB
DRAWN BY:	CMT
CHECKED BY:	MLK/SMS
APPROVED BY:	DLP
DATE:	07/06/2012
JOB No:	12285-02-00/06

FINAL

SHEET 23 OF 31 SHEETS

NOTES

1. TRENCHES WITH MORE THAN 2 CABLES SHALL BE INCREASED 3" IN WIDTH FOR EACH ADDITIONAL CABLE. IF SPECIFIED ON PLANS, TWO PARALLEL TRENCHES MAY BE CONSTRUCTED.
2. DEPTH OF TRENCHES SHALL BE AS SHOWN UNLESS OTHERWISE SPECIFIED ON THE PLANS.
3. SAND BACKFILL SHALL BE USED IF THE EXISTING SOIL DOES NOT MEET THE BACKFILL REQUIREMENTS.
4. ALL DISTURBED SURFACES SHALL BE RESTORED TO THEIR ORIGINAL CONDITION.

XREF DWG: tb.dwg tbcint.dwg
IMAGE FILES: RFD Airport logo-CMYK.jpg
UPDATE BY: Sean Smith
LAYOUT: ELECTRICALDETAILS
DATE: Friday, July 06, 2012 14:21:55
FILE: K:\Rockford\12258-02_TermPLot\PH1\Draw\Sheets\ELECTRICALDETAILS-1.dwg

LUMINAIRE SCHEDULE

MOUNTING: (MTG)	LAMP TYPE:	LENS/LOUVER: (L/L)
RE - RECESSED	FL - FLUORESCENT	A - .125" ACRYLIC
SP - SUSPENDED	CF - COMPACT FLUORESCENT	B - BLACK BAFFLE
CL - CEILING SURFACE	HL - HALOGEN	C - CLEAR ALZAK
WL - WALL	IN - INCANDESCENT	D - PARABOLIC
UC - UNDER CABINET	LED - LIGHT EMITTING DIODE	F - FRESNEL
CV - COVE	HS - HIGH PRESSURE SODIUM	G - TEMPERED GLASS
PL - POLE	MH - METAL HALIDE	H - WALL WASHER
O - OTHER (SEE DESCRIPTION)	SMH - SUPER METAL HALIDE	P - POLYCARBONATE
	PSMH - PULSE START METAL HALIDE	K - KSH12 .125" ACRYLIC
DOOR:	CMH - CERAMIC METAL HALIDE	K19 - KSH19 .156" ACRYLIC
FA - FLAT ALUMINUM	O - OTHER (SEE DESCRIPTION)	L - LOW IRIDESCENT SPECULAR ALUM.
FS - FLAT STEEL	XL - EXTENDED LIFE	N - NONE
RA - REGRESSED ALUMINUM	XLP - EXTENDED LIFE & OUTPUT	R - HIGH IMPACT DR ACRYLIC
RS - REGRESSED STEEL		O - OTHER (SEE DESCRIPTION)
	BALLAST: (BLS)	##BF - BALLAST FACTOR
FINISH:	DIM - DIMMING BALLAST	HL - HIGH / LOW LEVEL BALLAST
PAF - PAINT AFTER FABRICATION	EB - ELECTRONIC BALLAST	HP - HIGH PERFORMANCE
CSA - FINISH SELECTION BY ARCHITECT	EM - EMERGENCY BATTERY/BALLAST	ML - MULTI-LEVEL SWITCHING
	DALI - DIGITAL DIMMING BALLAST	MV - MULTI-VOLTAGE ELECTRONIC

CATALOG NUMBER SHALL NOT BE CONSIDERED COMPLETE AND MATERIAL SHALL NOT BE ORDERED BY MANUFACTURER AND CATALOG NUMBER ONLY. THE COMPLETE DESCRIPTION AND THE SPECIFICATION SHALL BE COORDINATED WITH THE CATALOG NUMBER TO DETERMINE THE EXACT MATERIAL AND ACCESSORIES TO BE ORDERED. THE MANUFACTURER LISTED S THE BASIS FOR DESIGN.
REFER TO SPECIFICATION FOR ADDITONAL INFORMATION AND REQUIREMENTS.

ALL LAMPS FOR THIS PROJECT SHALL BE FURNISHED AND INSTALLED BY THE ELECTRICAL CONTRACTOR UNLESS OTHERWISE NOTED.
FLUCRESCENT LAMP CORRELATED COLOR TEMPERATURE 3500°K, COLOR RENDERING INDEX (CRI) AT OR ABOVE 80, UNLESS NOTED OTHERWISE.

ITEM	DESCRIPTION	SIZE	MTG	LAMPS TYPE	LAMPS QUANTITY & SIZE	VOLTS / BLS	L/L	APPROVED MANUFACTURER
TYPE B SINGLE F1	SITE LUMINAIRE, SINGLE HEAD, DIE-CAST ALUMINUM HOUSING, GASKETED, TEMPERED GLASS LENS, HI/LOW DUAL LEVEL OUTPUT (2 BALLASTS), FULL CUT OFF, TYPE IV B DISTRIBUTION, COLOR TEMP 6000K. 10 FEET, ROUND TAPPERED STEEL POLE WITH INTERNAL VIBRATION DAMPER, ANCHOR BASE WITH HANDHOLES	1' X 2'	PL	FL	HI/LOW DUAL LEVEL 2 LAMPS 2 T5HO (52 WATT)	480V	G	PRECISION PARAGON ESTE-1X2-2L-T5H0-UH2-MN-TG-BZ-DF
TYPE A TRIPPLE F2	SITE LUMINAIRE, TRIPPLE HEAD, DIE-CAST ALUMINUM HOUSING, GASKETED, TEMPERED GLASS LENS, HI/LOW DUAL LEVEL OUTPUT (2 BALLASTS), FULL CUT OFF, TYPE IV B DISTRIBUTION, COLOR TEMP 6000K. 30 FEET, ROUND TAPPERED STEEL POLE WITH INTERNAL VIBRATION DAMPER, ANCHOR BASE WITH HANDHOLES	1' X 2'	PL	FL	HI/LOW DUAL LEVEL 4 LAMPS 4 T5HO (104 WATT)	480V	G	PRECISION PARAGON ESTE-1X2-4L-T5H0-UH2-MN-TG-BZ-DF
TYPE A QUAD F2	SITE LUMINAIRE, QUAD HEAD, DIE-CAST ALUMINUM HOUSING, GASKETED, TEMPERED GLASS LENS, HI/LOW DUAL LEVEL OUTPUT (2 BALLASTS), FULL CUT OFF, TYPE IV B DISTRIBUTION, COLOR TEMP 6000K. 30 FEET, ROUND TAPPERED STEEL POLE WITH INTERNAL VIBRATION DAMPER, ANCHOR BASE WITH HANDHOLES	1' X 2'	PL	FL	HI/LOW DUAL LEVEL 4 LAMPS 4 T5HO (104 WATT)	480V	G	PRECISION PARAGON ESTE-1X2-4L-T5H0-UH2-MN-TG-BZ-DF

EXTERIOR CONDUIT SCHEDULE

RUN NO	CONDUIT SIZE	WIRE QTY	WIRE SIZE	WIRE TYPE	FROM	TO	REMARKS
1	4"	4	#6	USE-2	JUNCTION BOX BASEMENT	EH-1	GRS CONDUIT BORED AND JACKED
		1	#6	GND			
		7	#10	USE-2			
		3	#10	GND			
	4"	1	PULL STRING	SPARE			
2	4"	6	6 STRAND	F.O.	JUNCTION BOX BASEMENT	CH-1	GRS CONDUIT BORED AND JACKED
	4"	1	PULL STRING	SPARE			
3	4"	4	#6	USE-2	EH-1	EH-2	GRS CONDUIT BORED AND JACKED
		1	#6	GND			
		7	#10	USE-2			
		3	#10	GND			
	4"	1	PULL STRING	SPARE			
4	4"	6	6 STRAND	F.O.	CH-1	CH-2	GRS CONDUIT BORED AND JACKED
	4"	1	PULL STRING	SPARE			
5	4"	4	#6	USE-2	EH-2	EH-3	GRS CONDUIT BORED AND JACKED
		1	#6	GND			
		7	#10	USE-2			
		3	#10	GND			
	4"	1	PULL STRING	SPARE			
6	4"	6	6 STRAND	F.O.	CH-2	CH-3	GRS CONDUIT BORED AND JACKED
	4"	1	PULL STRING	SPARE			
7	1 1/2"	4	#6	USE-2	LIGHT POLE	LIGHT POLE	PVC SCH. 40 IN TRENCH
		1	#6	GND			
8	3"	7	#10	USE-2	EH-3	EH-4	PVC SCH. 40 IN TRENCH
		3	#10	GND			
	3"	6	6 STRAND	F.O.	CH-3	CH-4	PVC SCH. 40 IN TRENCH
9	3"	7	#10	USE-2	EH-4	EH-5	PVC SCH. 40 IN TRENCH
		3	#10	GND			
	3"	6	6 STRAND	F.O.	CH-4	CH-5	PVC SCH. 40 IN TRENCH
10	1 1/2"	4	#6	USE-2	EH-5	P-9	GRS CONDUIT IN TRENCH
		1	#6	GND			
		2	#10	USE-2			
		1	#10	GND			
	1 1/2"	3	#10	USE-2	EH-5	SIGN	
		1	#10	GND			
	1 1/2"	1	6 STRAND	F.O.	CH-5	SIGN	
	1 1/2"	1	6 STRAND	F.O.	CH-5	P-11	
11	1 1/2"	4	#6	USE-2	EH-5	P-12	GRS CONDUIT IN TRENCH
		1	#6	GND			
		2	#10	USE-2			
		1	#10	GND			
	1 1/2"	1	6 STRAND	F.O.	CH-5	P-13	
12	1 1/2"	4	#6	USE-2	P-12	P-13	GRS CONDUIT IN TRENCH
		1	#6	GND			
		2	#10	USE-2			
		1	#10	GND			
13	1 1/2"	4	#6	USE-2	LIGHT POLE	LIGHT POLE	GRS CONDUIT IN TRENCH
		1	#6	GND			
		2	#10	USE-2			
		1	#10	GND			
14	1 1/2"	4	#6	USE-2	EH-5	P-15	GRS CONDUIT IN TRENCH
		1	#6	GND			
		2	#10	USE-2			
		1	#10	GND			
	1 1/2"	2	6 STRAND	F.O.	CH-5	P-15	
15	1 1/2"	1	6 STRAND	F.O.	P-15	P-17	GRS CONDUIT IN TRENCH
16	1 1/2"	4	#6	USE-2	EH-5	P-8	GRS CONDUIT IN TRENCH
		1	#6	GND			
		2	#10	USE-2			
		1	#10	GND			
17	1 1/2"	4	#6	USE-2	LIGHT POLE	LIGHT POLE	PVC SCH. 40 IN TRENCH
		1	#6	GND			
		2	#10	USE-2			
		1	#10	GND			
18	1 1/2"	1	6 STRAND	F.O.	CH-5	P-8	GRS CONDUIT IN TRENCH
19	1 1/2"	4	#6	USE-2	EH-5	P-18	PVC SCH. 40 IN TRENCH
		1	#6	GND			
20	1 1/2"	4	#6	USE-2	EH-5	P-9	GRS CONDUIT IN TRENCH
		1	#6	GND			
		2	#10	USE-2			
		1	#10	GND			
	1 1/2"	3	#10	USE-2	EH-5	SIGN	
		1	#10	GND			
	1 1/2"	1	6 STRAND	F.O.	CH-5	SIGN	
	1 1/2"	1	6 STRAND	F.O.	CH-5	P-11	
	1 1/2"	4	#6	USE-2	EH-5	P-12	GRS CONDUIT IN TRENCH
		1	#6	GND			
		2	#10	USE-2			
		1	#10	GND			
	1 1/2"	1	6 STRAND	F.O.	CH-5	P-13	
	1 1/2"	4	#6	USE-2	EH-5	P-15	GRS CONDUIT IN TRENCH
		1	#6	GND			
		2	#10	USE-2			
		1	#10	GND			
	1 1/2"	2	6 STRAND	F.O.	CH-5	P-15	
21	1 1/2"	4	#6	USE-2	EH-5	P-9	GRS CONDUIT IN TRENCH
		1	#6	GND			
		2	#10	USE-2			
		1	#10	GND			
	1 1/2"	3	#10	USE-2	EH-5	SIGN	
		1	#10	GND			
	1 1/2"	1	6 STRAND	F.O.	CH-5	SIGN	
	1 1/2"	1	6 STRAND	F.O.	CH-5	P-11	
	1 1/2"	4	#6	USE-2	EH-5	P-12	GRS CONDUIT IN TRENCH
		1	#6	GND			
		2	#10	USE-2			
		1	#10	GND			
	1 1/2"	1	6 STRAND	F.O.	CH-5	P-13	
22	1 1/2"	1	6 STRAND	F.O.	CH-5	P-11	GRS CONDUIT
	1 1/2"	3	#10	USE-2	EH-5	SIGN	
		1	#10	GND			
	1 1/2"	1	6 STRAND	F.O.	CH-5	SIGN	
23	1 1/2"	4	#6	USE-2	P-13	P-14	GRS CONDUIT IN TRENCH
		1	#6	GND			
24	1 1/2"	1	6 STRAND	F.O.	CH-5	P-13	GRS CONDUIT IN TRENCH
25	1 1/2"	3	#10	USE-2	EH-5	SIGN	GRS CONDUIT IN TRENCH
		1	#10	GND			
	1 1/2"	1	6 STRAND	F.O.	CH-5	SIGN	
26	1 1/2"	1	6 STRAND	F.O.	CH-5	P-11	PVC SCH. 40

LIGHT POLE SCHEDULE

POLE NO.	NO. OF LUMINAIRES	MOUNTING HEIGHT	NORTHING	EASTING
P-1	(1) F1	10' - 0"	2018115.6518	2587027.2685
P-2	(1) F1	10' - 0"	2018206.0332	2586984.4760
P-3	(1) F1	10' - 0"	2018296.4146	2586941.6835
P-4	(1) F1	10' - 0"	2018386.7961	2586898.8911
P-5	(3) F2	30' - 0"	2018426.5697	2586908.0807
P-6	(3) F2	30' - 0"	2018481.5704	2586991.5967
P-7	(3) F2	30' - 0"	2018536.5711	2587075.1127
P-8	(3) F2	30' - 0"	2018603.4002	2587150.8390
P-9	(3) F2	30' - 0"	2018681.3348	2587179.1568
P-10	(3) F2	30' - 0"	2018764.3338	2587263.4970
P-11	(3) F2	30' - 0"	2018860.5498	2587350.9184
P-12	(4) F2	30' - 0"	2018597.5084	2587253.7885
P-13	(4) F2	30' - 0"	2018693.7243	2587341.2099
P-14	(4) F2	30' - 0"	2018789.9402	2587428.6312
P-15	(4) F2	30' - 0"	2018494.6080	2587322.4291
P-16	(4) F2	30' - 0"	2018598.2252	2587416.5751
P-17	(4) F2	30' - 0"	2018709.2436	2587517.4459
P-18	(1) F1	10' - 0"	2018511.4981	2587184.4289

IL. CONTRACT: **RO022**
IL. LETTING ITEM: **4A**
IL. PROJECT: **RFD-4187**
A.I.P. PROJECT:

SURVEY BOOK # 12258-02-00

REVISIONS

NUMBER	BY	DATE

0 1 2
THIS BAR IS EQUAL TO 2" AT FULL SCALE (34X22).

CHICAGO ROCKFORD INTERNATIONAL AIRPORT
ROCKFORD, IL
EAST TERMINAL AUTO PARKING LOT, PHASE 1

ELECTRICAL DETAILS - SHEET 2

© Copyright CMT, Inc.

CMT
CRAWFORD, MURPHY & TILLY, INC.
CONSULTING ENGINEERS
License No. 184-000613

DESIGN BY:	AB
DRAWN BY:	CMT
CHECKED BY:	MLK/SMS
APPROVED BY:	DLP
DATE:	07/06/2012
JOB No:	12285-02-00/06

FINAL

SHEET 24 OF 31 SHEETS

XREF DWG: tb.dwg
tbcjnt.dwg
IMAGE FILES: RFD Airport logo-CMYK.jpg
UPDATE BY: Sean Smith
LAYOUT: ELECTRICALDETAILS
DATE: Friday, July 06, 2012 14:22:20
FILE: K:\Rockford\12258-02_TermPkLotPH1\Draw\Sheets\ELECTRICALDETAILS-2.dwg

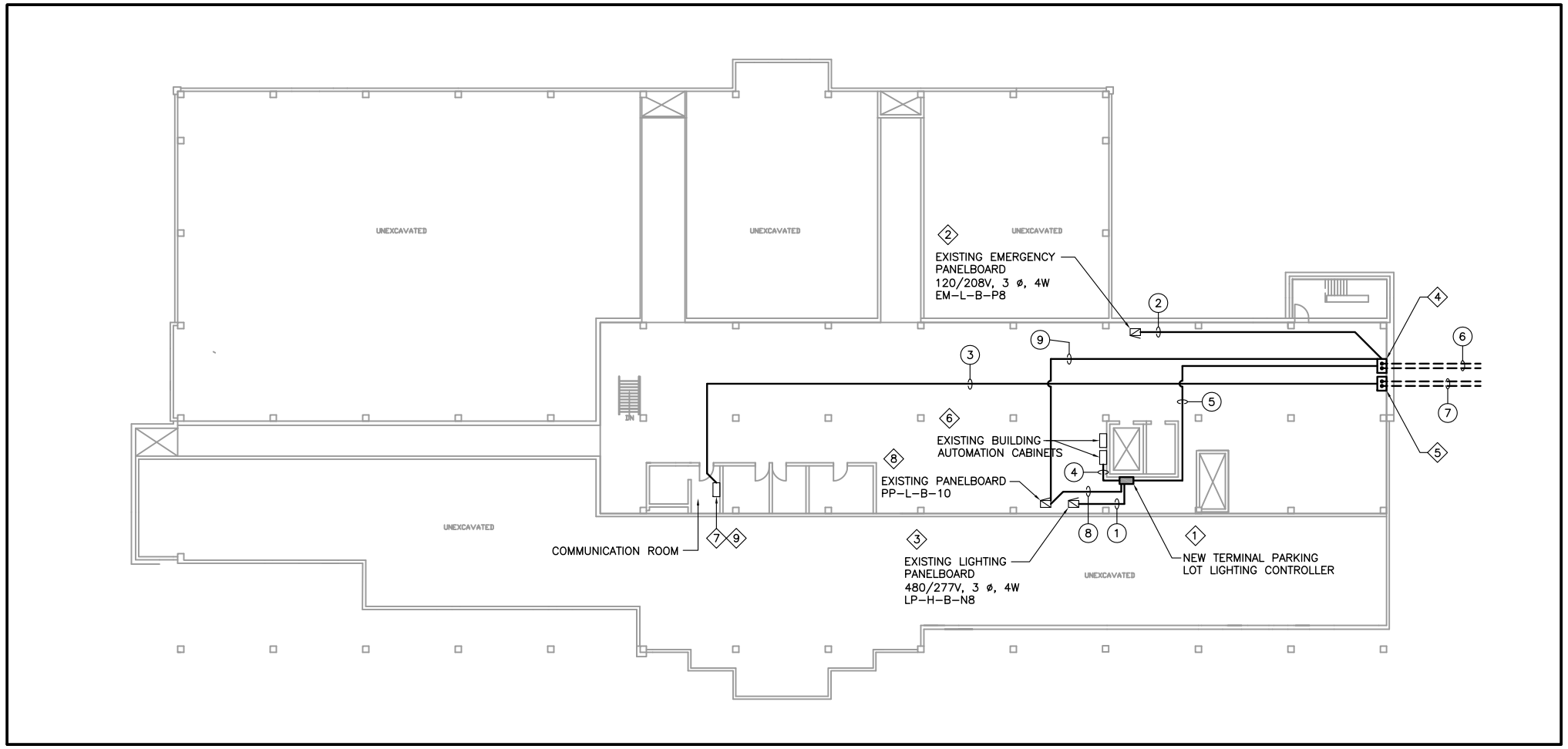

TERMINAL BUILDING ELECTRICAL PLAN

SCALE: 1/16" = 1'-0"

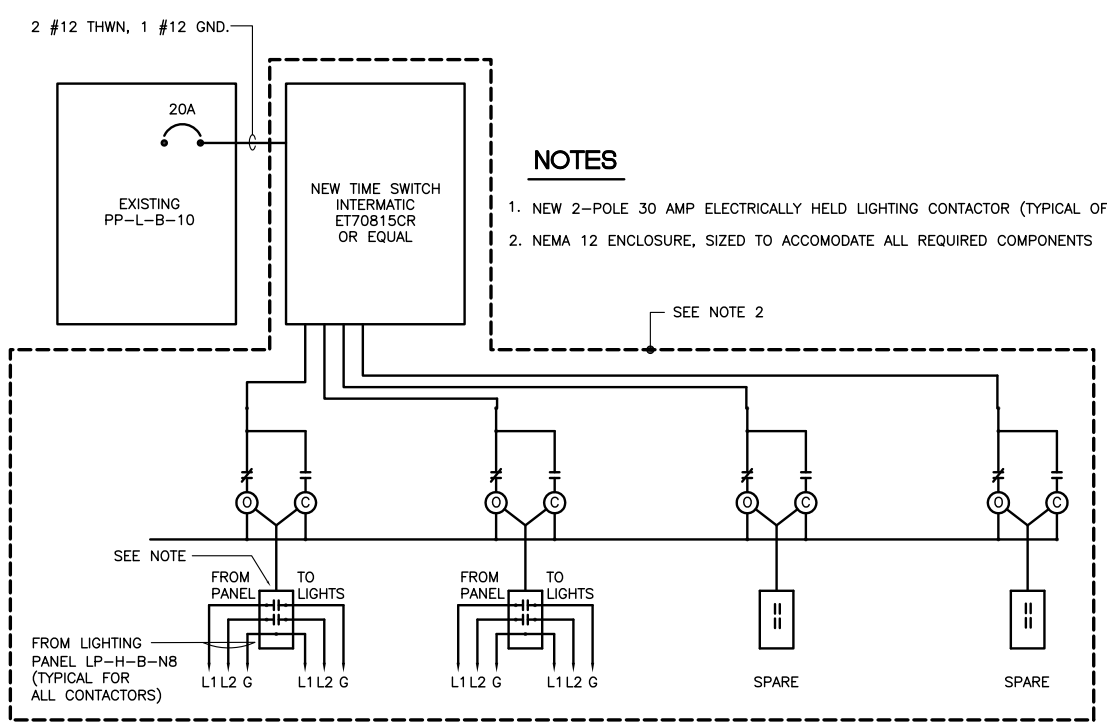

NOTES

1. NEW 2-POLE 30 AMP ELECTRICALLY HELD LIGHTING CONTACTOR (TYPICAL OF 4).
2. NEMA 12 ENCLOSURE, SIZED TO ACCOMODATE ALL REQUIRED COMPONENTS

LIGHTING CONTROLLER WIRING SCHEMATIC

NOT TO SCALE

CABLE/CONDUIT SCHEDULE

1. 4 #12 THWN, 2 #12 GND. IN 1" CONDUIT.
2. 4 #10 XLP-USE, 2 #10 GND. IN 1" CONDUIT.
3. (6) 6-STRAND MULTI-MODE FIBER OPTIC IN 3" CONDUIT.
4. (4) 2/C #16 TWISTED SHIELDED PAIR IN 2" CONDUIT.
5. 4 #6 XLP-USE, 1 #6 GND. 1-1/2" CONDUIT.
6. 4 #6 XLP-USE, 1 #6 GND. AND 7 #10 XLP-USE, 3 #10 GND. IN 1-4" GRS. CONDUIT, 1-4" GRS. SPARE CONDUIT.
7. (6) 6-STRAND MMF IN 4" GRS CONDUIT, 1-4" GRS SPARE CONDUIT.
8. 2 #12 THWN, 1 #12 GND. IN 3/4" CONDUIT.
9. 3#10 XLP-USE, 1#10 GND. IN 1" CONDUIT

EQUIPMENT SCHEDULE

1. NEW TERMINAL PARKING LOT LIGHTING CONTROLLER. SEE WIRING SCHEMATIC.
2. EXISTING PANEL EM-L-B-P8. INSTALL (2) 20A, 1-POLE CIRCUIT BREAKERS FOR CCTV CIRCUITS.
3. EXISTING PANEL LP-H-B-N8. INSTALL (2) 20A, 2-POLE CIRCUIT BREAKERS FOR PARKING LOT LIGHTING CIRCUITS.
4. NEW 24"x24"x12" JUNCTION BOX FOR POWER CABLES, ATTACHED TO WALL.
5. NEW 24"x24"x12" JUNCTION BOX FOR COMMUNICATION CABLES, ATTACHED TO WALL.
6. EXISTING BUILDING AUTOMATION CABINET. LEAVE 10'-0" SLACK OF CONTROL WIRES TO BE TERMINATED BY OTHERS.
7. EXISTING FIBER OPTIC CABINET. LEAVE 15'-0" OF FIBER OPTIC CABLE COILED UP FOR TERMINATION BY OTHERS. PROVIDE PATCH PANELS AS REQUIRED.
8. EXISTING PANEL PP-L-B-10. INSTALL (1) 20A, 2-POLE CIRCUIT BREAKER FOR MESSAGE SIGN AND (1) 20A 1-POLE CIRCUIT BREAKER FOR PARKING LOT LIGHTING CONTROLLER.
9. INSTALL (1) 6-STRAND MMF FOR MESSAGE SIGN IN 1" CONDUIT UP TO NETWORK ROOM LOCATED ON FIRST FLOOR. PROVIDE FIBER TO ETHERNET SWITCH AS REQUIRED BY SIGN MANUFACTURER TO BE INTERFACED WITH AIRPORT'S LAN.

IL. CONTRACT: **RO022**
IL. LETTING ITEM: **4A**
IL. PROJECT: **RFD-4187**
A.I.P. PROJECT:

SURVEY BOOK # 12258-02-00

REVISIONS		
NUMBER	BY	DATE

0 1 2
THIS BAR IS EQUAL TO 2" AT FULL SCALE (34X22).

CHICAGO ROCKFORD INTERNATIONAL AIRPORT
ROCKFORD, IL
EAST TERMINAL AUTO PARKING LOT, PHASE 1

TERMINAL BUILDING ELECTRICAL PLAN

© Copyright CMT, Inc.

CMT
CRAWFORD, MURPHY & TILLY, INC.
CONSULTING ENGINEERS
License No. 184-000613

DESIGN BY:	AB
DRAWN BY:	CMT
CHECKED BY:	MLK/SMS
APPROVED BY:	DLP
DATE:	07/06/2012
JOB No:	12285-02-00/06

FINAL

SHEET 25 OF 31 SHEETS

XREF DWG: tb.dwg tbcint.dwg
IMAGE FILES: RFD Airport logo-CMYK.jpg
UPDATE BY: Sean Smith
LAYOUT: ELECTRICALDETAILS
DATE: Friday, July 06, 2012 13:41:05
FILE: K:\Rockfordap\12258-02_TermPkLotPH1\Draw\Sheets\TERMINAL ELECTRIC.dwg

SIGN DETAIL A

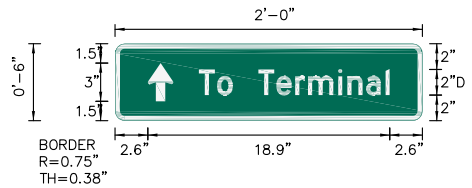

SIGN NUMBER	To Terminal (Ahead Arrow)
WIDTH x HGHT.	2'-0" x 0'-6"
BORDER WIDTH	0.38"
CORNER RADIUS	0.75"
MOUNTING	Pole
BACKGROUND	TYPE: Reflective
	COLOR: Green
LEGEND/BORDER	TYPE: Reflective
	COLOR: White/White

SYMBOL	ROT	X	Y	WID	HT
AR_Type D	360	2.6	1.5	2	3

Panel Style:
Dimensions are in inches.tenths

Letter locations are panel edge to lower left corner

LETTER POSITIONS (X)												LENGTH	SERIES/SIZE
T	o		T	e	r	m	i	n	a	l			D 2000
6.6	8	9.2	11.2	12.6	14.1	15.1	17.4	18.2	19.6	21.1		14.9	2/1.5

SIGN DETAIL B

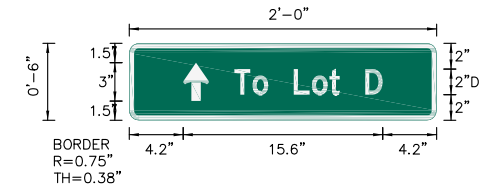

SIGN NUMBER	To Lot D (Ahead Arrow)
WIDTH x HGHT.	2'-0" x 0'-6"
BORDER WIDTH	0.38"
CORNER RADIUS	0.75"
MOUNTING	Pole
BACKGROUND	TYPE: Reflective
	COLOR: Green
LEGEND/BORDER	TYPE: Reflective
	COLOR: White/White

SYMBOL	ROT	X	Y	WID	HT
AR_Type D	360	4.2	1.5	2	3

Panel Style:
Dimensions are in inches.tenths

Letter locations are panel edge to lower left corner

LETTER POSITIONS (X)										LENGTH	SERIES/SIZE	
T	o		L	o	t		D				D 2000	
8.2	9.6	10.9	12.9	14.3	15.6	16.4	18.4		11.6		2/1.5	

SIGN DETAIL C

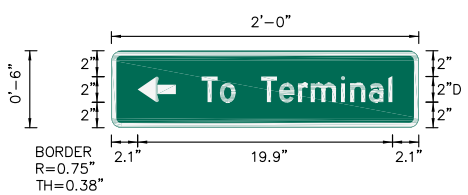

SIGN NUMBER	To Terminal (Left Arrow)
WIDTH x HGHT.	2'-0" x 0'-6"
BORDER WIDTH	0.38"
CORNER RADIUS	0.75"
MOUNTING	Pole
BACKGROUND	TYPE: Reflective
	COLOR: Green
LEGEND/BORDER	TYPE: Reflective
	COLOR: White/White

SYMBOL	ROT	X	Y	WID	HT
AR_Type D	90	2.1	2	2	3

Panel Style:
Dimensions are in inches.tenths

Letter locations are panel edge to lower left corner

LETTER POSITIONS (X)												LENGTH	SERIES/SIZE
T	o		T	e	r	m	i	n	a	l			D 2000
7.1	8.5	9.7	11.7	13.1	14.6	15.6	17.9	18.7	20.1	21.6		14.9	2/1.5

SIGN DETAIL D

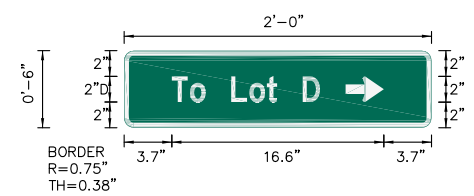

SIGN NUMBER	To Lot D (Right Arrow)
WIDTH x HGHT.	2'-0" x 0'-6"
BORDER WIDTH	0.38"
CORNER RADIUS	0.75"
MOUNTING	Pole
BACKGROUND	TYPE: Reflective
	COLOR: Green
LEGEND/BORDER	TYPE: Reflective
	COLOR: White/White

SYMBOL	ROT	X	Y	WID	HT
AR_Type D	90	17.3	2	2	3

Panel Style:
Dimensions are in inches.tenths

Letter locations are panel edge to lower left corner

LETTER POSITIONS (X)										LENGTH	SERIES/SIZE
T	o		L	o	t		D				D 2000
3.7	5.1	6.4	8.4	9.8	11.1	11.9	13.9				2/1.5 11.6

TYPE 3 SIGN DETAIL

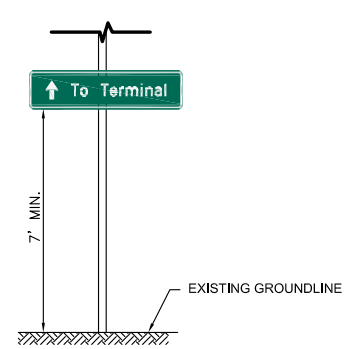

POLE MOUNT DETAIL

N.T.S.

NOTES

1. FINAL TYPE 3 SIGN LEGEND SHALL BE DETERMINED BY AIRPORT. SIGN LEGEND WILL BE IN COLOR. CONTRACTOR TO COORDINATE WITH ENGINEER ON FINAL LEGEND DETAIL.
2. PASSENGER WAYFINDER SIGNS SHALL BE MOUNTED ON NEW LIGHT POLES AS SHOWN ON PLANS.

IL. CONTRACT: **RO022**
IL. LETTING ITEM: **4A**
IL. PROJECT: **RFD-4187**
A.I.P. PROJECT:

SURVEY BOOK # 12258-02-00

REVISIONS		
NUMBER	BY	DATE

0 1 2
THIS BAR IS EQUAL TO 2" AT FULL SCALE (34X22).

GREATER ROCKFORD AIRPORT AUTHORITY
CHICAGO ROCKFORD INTERNATIONAL AIRPORT
ROCKFORD, IL

EAST TERMINAL AUTO PARKING LOT, PHASE 1

ROADWAY SIGNAGE DETAILS

© Copyright CMT, Inc.

CMT
CRAWFORD, MURPHY & TILLY, INC.
CONSULTING ENGINEERS
License No. 184-000613

DESIGN BY:	MLK
DRAWN BY:	CMT
CHECKED BY:	MLK/SMS
APPROVED BY:	DLP
DATE:	07/06/2012
JOB No:	12285-02-00/06

FINAL

SHEET 26 OF 31 SHEETS

XREF DWG: tb.dwg
tbcint.dwg
IMAGE FILES: RFD Airport logo-CMYK.jpg
RFD Airport logo-CMYK.jpg
UPDATE BY: Sean Smith
LAYOUT: ROAD SIGN DETAILS
DATE: Friday, July 06, 2012 13:41:43
FILE: K:\Rockford\12258-02_TermPkLotPH1\Draw\Sheets\ROAD SIGN DETAILS.dwg

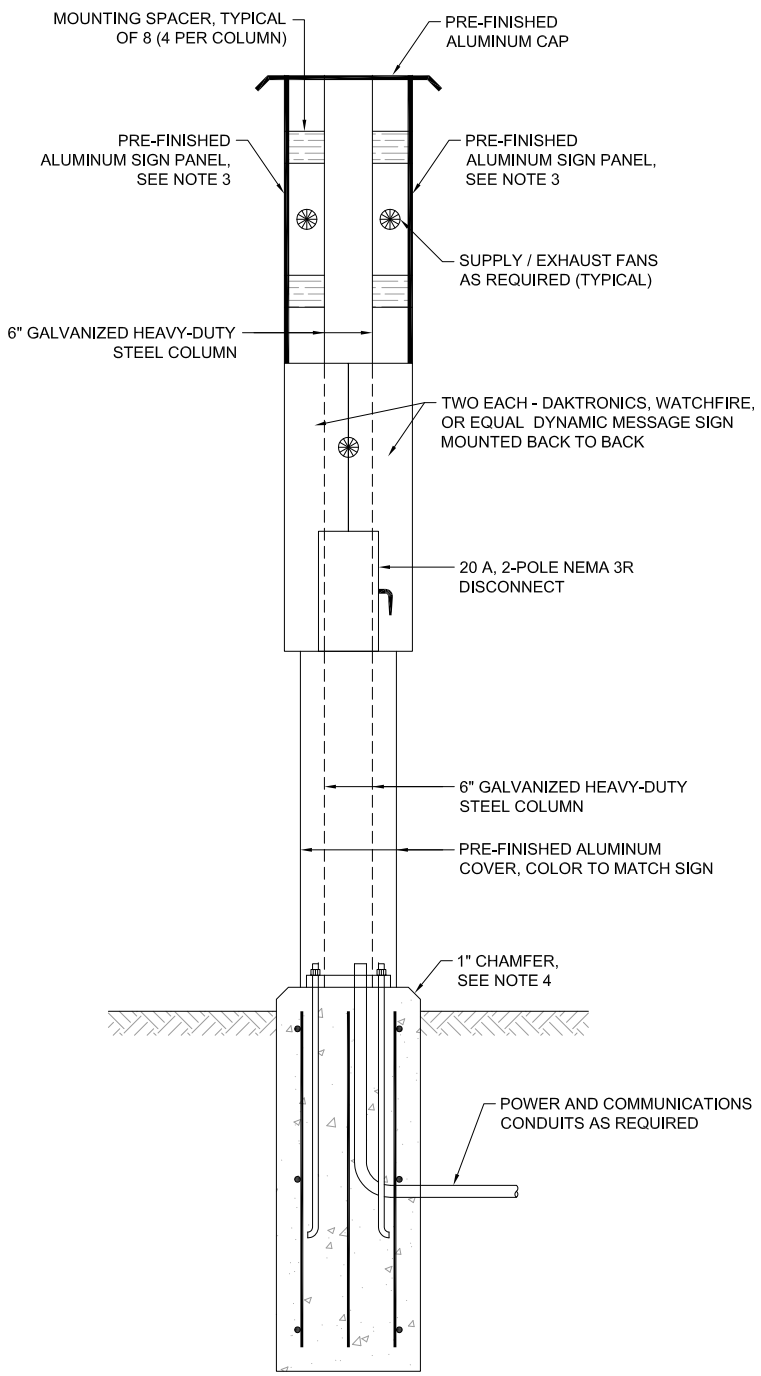

SECTION A-A

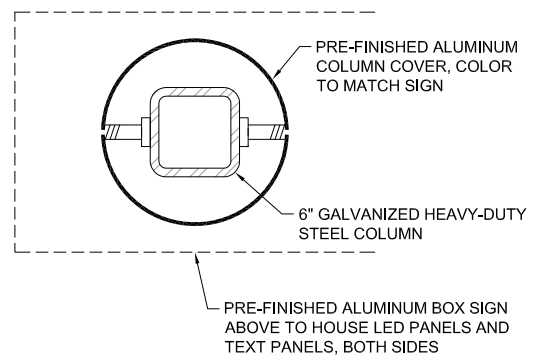

SECTION B-B

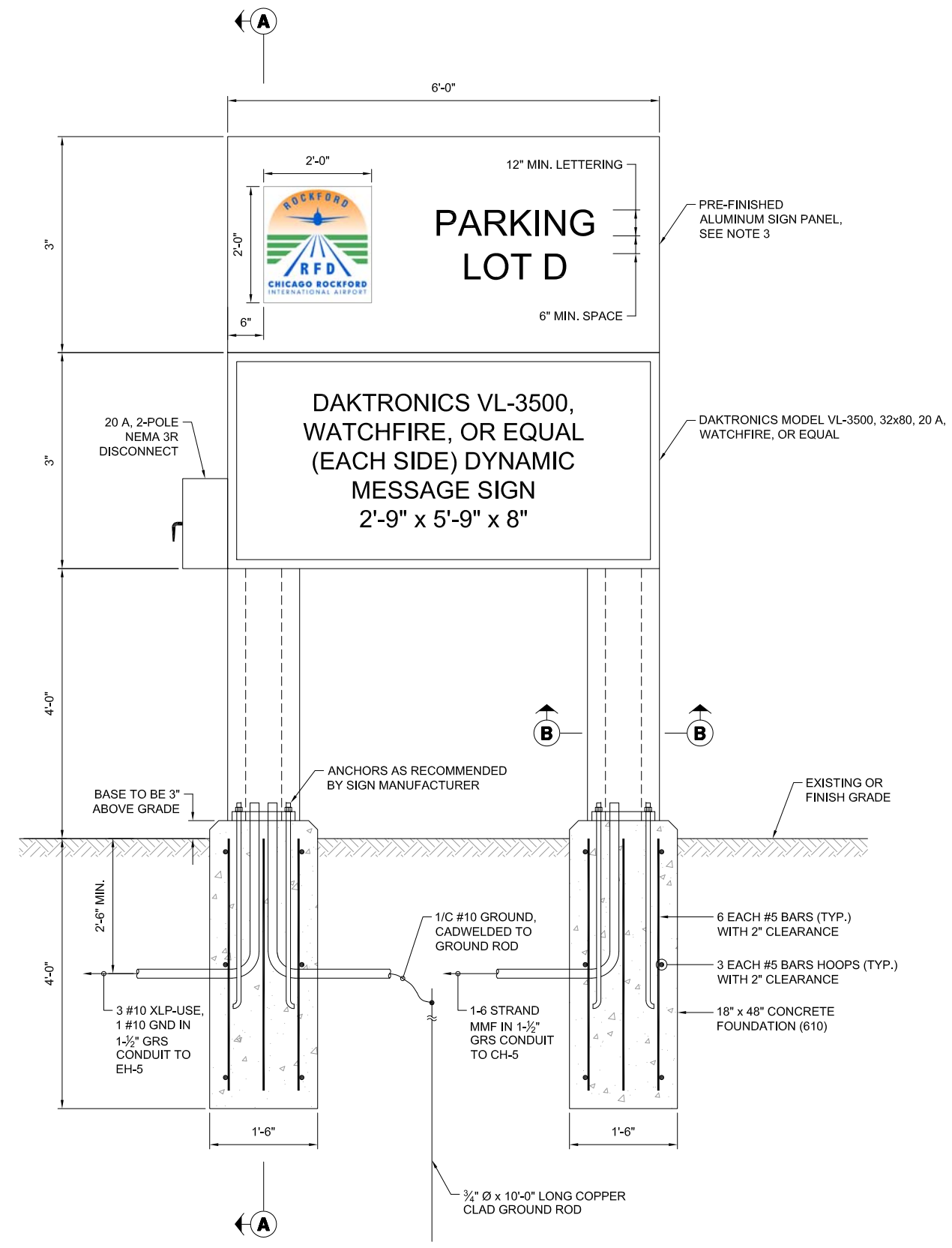

NEW AS800098 INFORMATION SIGN DETAIL

NOT TO SCALE

INFORMATION SIGN NOTES:

1. DYNAMIC MESSAGE SIGN TO BE DAKTRONICS MODEL VL-3500, WATCHFIRE, OR EQUAL.
2. MOUNTING ANCHORS TO BE PER MANUFACTURER'S RECOMMENDATION.
3. SIGN FACE LEGEND TO BE CONFIRMED DURING DETAILED SHOP DRAWING PHASE, PRIOR TO FABRICATION.
4. THE PORTION OF FOUNDATION THAT IS EXPOSED SHALL BE BROOM FINISHED SMOOTH.

IL. CONTRACT: **RO022**
IL. LETTING ITEM: **4A**
IL. PROJECT: **RFD-4187**
A.I.P. PROJECT:

SURVEY BOOK # 12258-02-00

REVISIONS

NUMBER	BY	DATE

0 1 2
THIS BAR IS EQUAL TO 2" AT FULL SCALE (34X22).

GREATER ROCKFORD AIRPORT AUTHORITY
CHICAGO ROCKFORD INTERNATIONAL AIRPORT
ROCKFORD, IL

EAST TERMINAL AUTO PARKING LOT, PHASE 1

INFORMATION SIGN DETAILS

© Copyright, CMT, Inc.

CMT
CRAWFORD, MURPHY & TILLY, INC.
CONSULTING ENGINEERS
License No. 184-000613

DESIGN BY:	DLP/AB
DRAWN BY:	CMT
CHECKED BY:	MLK/SMS
APPROVED BY:	DLP
DATE:	07/06/2012
JOB No:	12285-02-00/06

FINAL

SHEET 27 OF 31 SHEETS

XREF DWG: tb.dwg tbcint.dwg
IMAGE FILES: RFD Airport logo-CMYK.jpg RFD Airport logo-CMYK.jpg
UPDATE BY: Sean Smith
LAYOUT: INFO SIGN DETAILS
DATE: Friday, July 06, 2012 13:43:26
FILE: K:\RockfordAp\12258-02_TermPkLotPH1\Draw\Sheets\INFO SIGN DETAILS.dwg

EXTERIOR POLE MOUNTED CAMERA

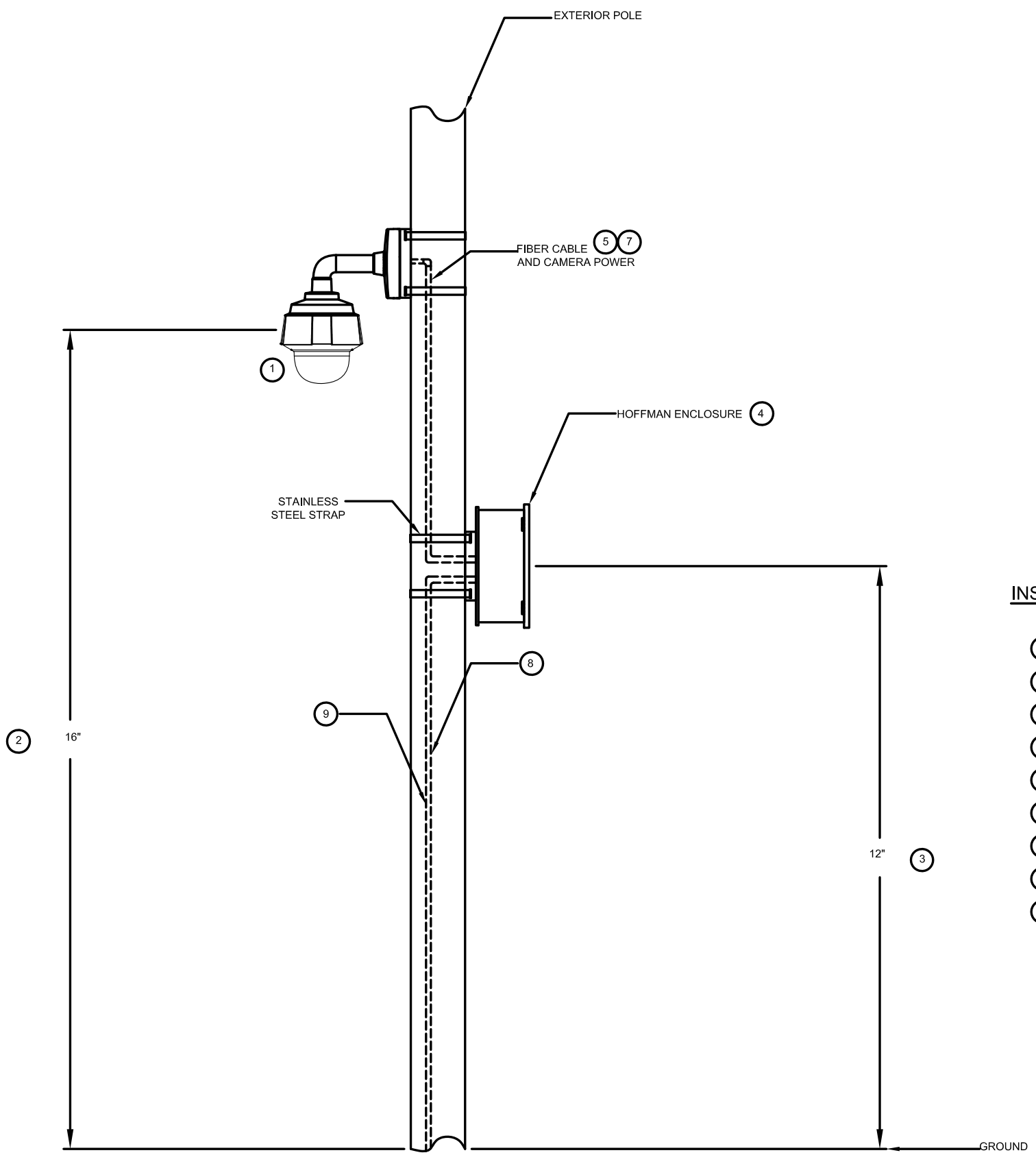

NOTE: THE FURNISHING AND INSTALLATION OF CCTV CAMERA, ENCLOSURE AND ASSOCIATED HARDWARE SHALL BE INCLUDED IN THE LUMP SUM PAY ITEM " AR800097 CCTV SECURITY SYSTEM UPGRADES".

HOFFMAN ENCLOSURE DETAILS

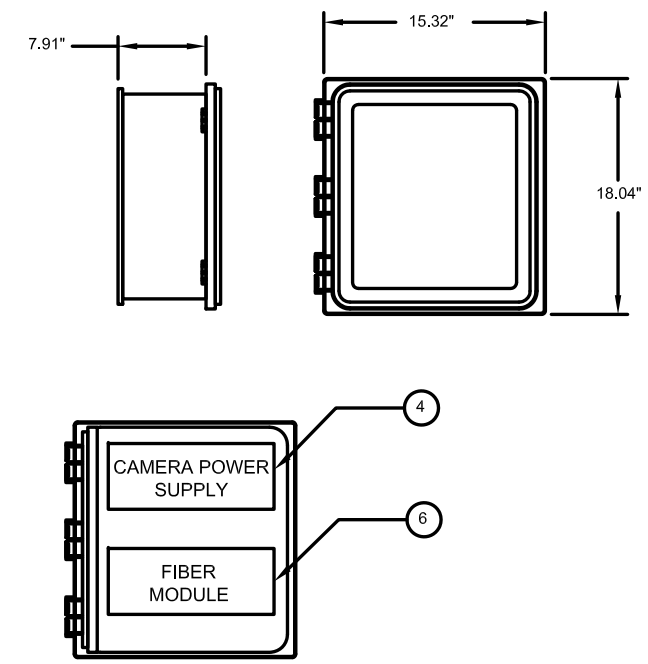

INSTALLATION DETAILS

1. NETWORK HIGH DEFINITION CAMERA
2. CAMERA TO BE MOUNTED AT 16' UNLESS OTHERWISE NOTED
3. HOFFMAN ENCLOSURE TO BE MOUNTED AT 12' (HIGH TO BE FIELD VERIFIED PRIOR TO INSTALLATION)
4. CAMERA POWER SUPPLY TO BE INSTALLED IN HOFFMAN ENCLOSURE PER CCTV SYSTEM SUPPLIER
5. MULTIMODE FIBER CABLE TO CLOSET OR IDENTIFIED VIDEO SURVEILLANCE EQUIPMENT RACK
6. FIBER MODULE PER CCTV SYSTEM SUPPLIER
7. CCTV CAMERA POWER CABLE PER CAMERA MANUFACTURER
8. 1-6 STRAND MULTI-MODE FIBER OPTIC CABLE
9. 2#10 XLP-USE, 1#10 GROUND (120V POWER)

IL. CONTRACT: **RO022**
IL. LETTING ITEM: **4A**
IL. PROJECT: **RFD-4187**
A.I.P. PROJECT:

SURVEY BOOK # 12258-02-00

REVISIONS

NUMBER	BY	DATE

0 1 2
THIS BAR IS EQUAL TO 2" AT FULL SCALE (34X22).

GREATER ROCKFORD AIRPORT AUTHORITY
CHICAGO ROCKFORD INTERNATIONAL AIRPORT
ROCKFORD, IL

EAST TERMINAL AUTO PARKING LOT, PHASE 1

CLOSED CIRCUIT TELEVISION CAMERA DETAILS

© Copyright CMT, Inc.

CMT
CRAWFORD, MURPHY & TILLY, INC.
CONSULTING ENGINEERS
License No. 184-000613

DESIGN BY:	AB
DRAWN BY:	CMT
CHECKED BY:	MLK/SMS
APPROVED BY:	AB
DATE:	07/06/2012
JOB No:	12285-02-00/06

FINAL

SHEET 28 OF 31 SHEETS

XREF DWG: tb.dwg
tbcint.dwg
IMAGE FILES: RFD Airport logo-CMYK.jpg
UPDATE BY: Sean Smith
LAYOUT: CCTV Details
DATE: Friday, July 06, 2012 13:45:51
FILE: K:\Rockford&\12258-02_TermPkLotPH1\Draw\Sheets\CCTV DETAILS.dwg

DATE: Friday, July 06, 2012 13:49:40
FILE: K:\RockfordAp\12258-02_TermPkLotPH1\Draw\Sheets\XSECTS1.dwg

UPDATE BY: Sean Smith
LAYOUT: XSECTS1

XREF DWG: tb.dwg tbclnt.dwg xsm-001.dwg
IMAGE FILES: RFD Airport logo-CMYK.jpg

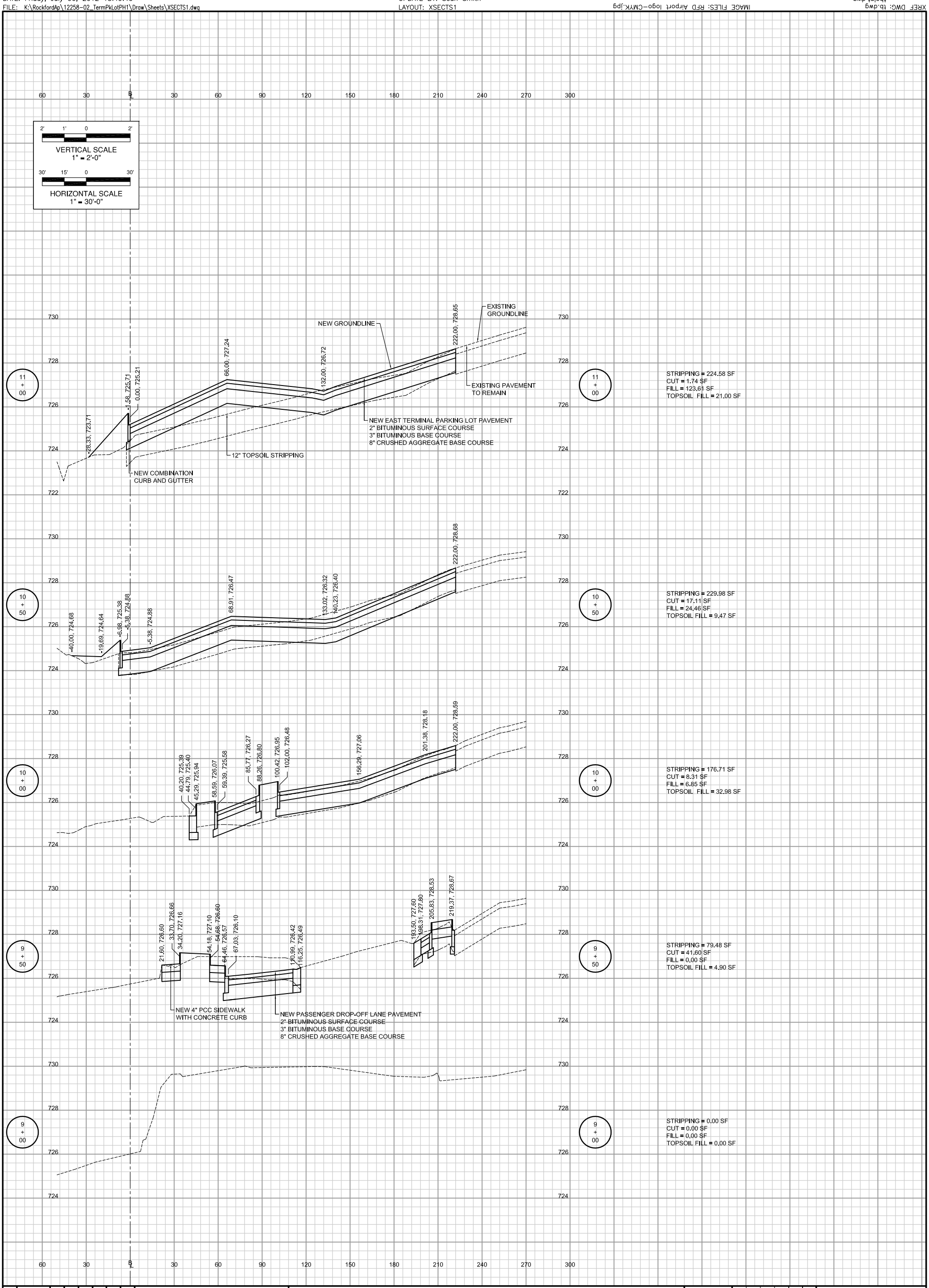

© Copyright CMT, Inc.

CMT
CRAWFORD, MURPHY & TILLY, INC.
CONSULTING ENGINEERS
License No. 184-000613

GREATER ROCKFORD AIRPORT AUTHORITY
CHICAGO ROCKFORD INTERNATIONAL AIRPORT
ROCKFORD, IL

EAST TERMINAL AUTO PARKING LOT, PHASE 1

CROSS SECTIONS - SHEET 1

0 1 2
THIS BAR IS EQUAL TO 2" AT FULL SCALE (34X22).

NUMBER	BY	DATE

REVISIONS

SURVEY BOOK # 12258-02-00

IL. CONTRACT: **RO022**
IL. LETTING ITEM: **4A**
IL. PROJECT: **RFD-4187**
A.I.P. PROJECT:

DESIGN BY: SMS
DRAWN BY: CMT
CHECKED BY: MLK/SMS
APPROVED BY: DLP
DATE: 07/06/2012
JOB No: 12285-02-00/06

FINAL

DATE: Friday, July 06, 2012 13:48:02
FILE: K:\RockfordAp\12258-02_TermPkLotPH1\Draw\Sheets\XSECTS2.dwg

UPDATE BY: Sean Smith
LAYOUT: XSECTS2

XREF DWG: tb.dwg tbclnt.dwg xsm-002.dwg
IMAGE FILES: RFD Airport logo-CMYK.jpg

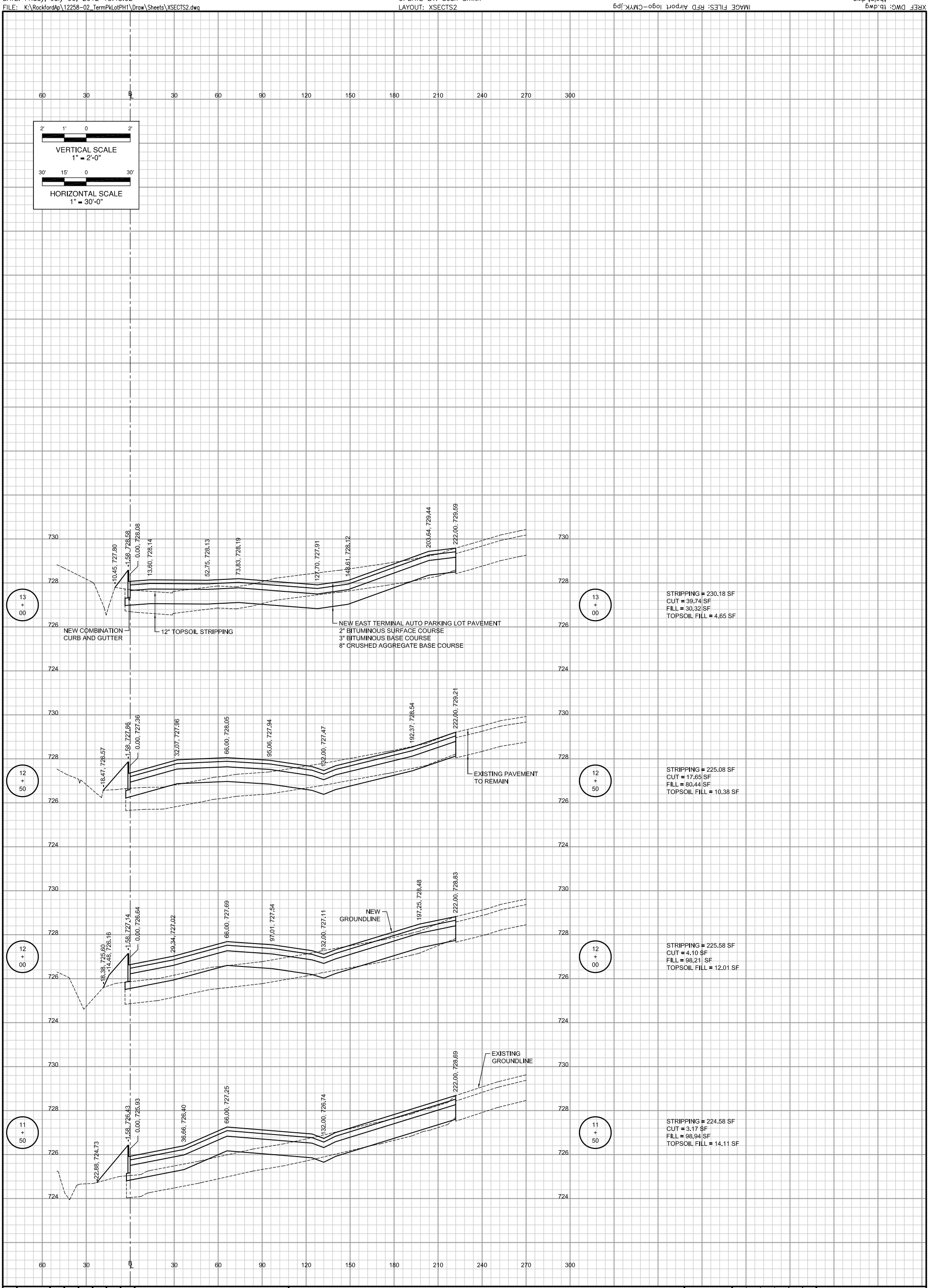

IL. CONTRACT: **RO022**
IL. LETTING ITEM: **4A**
IL. PROJECT: **RFD-4187**
A.I.P. PROJECT:

SURVEY BOOK # 12258-02-00

REVISIONS

NUMBER	BY	DATE

THIS BAR IS EQUAL TO 2" AT FULL SCALE (34X22).

GREATER ROCKFORD AIRPORT AUTHORITY
CHICAGO ROCKFORD INTERNATIONAL AIRPORT
ROCKFORD, IL

EAST TERMINAL AUTO PARKING LOT, PHASE 1

CROSS SECTIONS - SHEET 2

© Copyright CMT, Inc.
CMT
CRAWFORD, MURPHY & TILLY, INC.
CONSULTING ENGINEERS
License No. 184-000613

DESIGN BY: SMS
DRAWN BY: CMT
CHECKED BY: MLK/SMS
APPROVED BY: DLP
DATE: 07/06/2012
JOB No: 12285-02-00/06

FINAL

PROJECT E. Terminal Parking Lot Phase I, Chicago-Rockford Intern. Airport, Rockford, IL
CLIENT Crawford Murphy and Tilly, Inc., Rockford, Illinois
TSC

BORING 1 DATE STARTED 4-20-12 DATE COMPLETED 4-20-12 JOB L-78,307
ELEVATIONS: GROUND SURFACE 727.3; END OF BORING 717.3
WATER LEVEL OBSERVATIONS: ▼ WHILE DRILLING Dry; ▽ AT END OF BORING Dry; ▼ 24 HOURS

SAMPLE NO.	TYPE	N	WC	Qu	γDRY	DEPTH	ELEV.	SOIL DESCRIPTIONS
						0.4	726.9	Dark brown clayey TOPSOIL, very moist (OL)
1	SS	8	18.5	3.0*				
						3.0	723.3	Very tough to tough brown sandy CLAY to loose to firm clayey SAND, trace fine gravel, very moist (CL/SC)
2	SS	11	12.9	1.0*	117			
						6.0	721.3	
3	SS	5	13.2					Loose brown clayey SAND, very moist (SC)
						8.0	719.3	
4	SS	4	7.0					Very loose brown silty, clayey SAND, moist (SC-SM)

* Approximate unconfined compressive strength based on measurements with a calibrated pocket penetrometer.

DISTANCE BELOW SURFACE IN FEET: 0, 5, 10, 15, 20
DRILL RIG NO. 334
Division lines between deposits represent approximate boundaries between soil types; in-situ, the transition may be gradual.
End of Boring at 10.0'

PROJECT E. Terminal Parking Lot Phase I, Chicago-Rockford Intern. Airport, Rockford, IL
CLIENT Crawford Murphy and Tilly, Inc., Rockford, Illinois
TSC

BORING 2 DATE STARTED 4-20-12 DATE COMPLETED 4-20-12 JOB L-78,307
ELEVATIONS: GROUND SURFACE 725.3; END OF BORING 715.3
WATER LEVEL OBSERVATIONS: ▼ WHILE DRILLING Dry; ▽ AT END OF BORING Dry; ▼ 24 HOURS

SAMPLE NO.	TYPE	N	WC	Qu	γDRY	DEPTH	ELEV.	SOIL DESCRIPTIONS
1	SS	5	13.0	1.5*	105			Tough brown to dark brown very silty CLAY, little fine sand, trace organic, moist (OL) [Possible Fill]
						3.0	722.3	
2	SS	8	30.1	1.5*	84			Tough black clayey TOPSOIL, very moist (OL) L.O.I. = 8.5%
						6.0	719.3	
3	SS	3	13.8					Very loose to loose brown clayey SAND, moist (SC)
4	SS	7	12.7					

* Approximate unconfined compressive strength based on measurements with a calibrated pocket penetrometer.

DISTANCE BELOW SURFACE IN FEET: 0, 5, 10, 15, 20
DRILL RIG NO. 334
Division lines between deposits represent approximate boundaries between soil types; in-situ, the transition may be gradual.
End of Boring at 10.0'

PROJECT E. Terminal Parking Lot Phase I, Chicago-Rockford Intern. Airport, Rockford, IL
CLIENT Crawford Murphy and Tilly, Inc., Rockford, Illinois
TSC

BORING 3 DATE STARTED 4-20-12 DATE COMPLETED 4-20-12 JOB L-78,307
ELEVATIONS: GROUND SURFACE 728.2; END OF BORING 718.2
WATER LEVEL OBSERVATIONS: ▼ WHILE DRILLING Dry; ▽ AT END OF BORING Dry; ▼ 24 HOURS

SAMPLE NO.	TYPE	N	WC	Qu	γDRY	DEPTH	ELEV.	SOIL DESCRIPTIONS
						1.0	727.2	Dark brown clayey TOPSOIL, trace organic, moist (OL)
1	SS	7	9.7					Loose brown clayey SAND, moist (SC)
						3.0	725.2	
2	SS	6	13.0	0.75*	113			Stiff brown sandy CLAY, very moist (CL)
						6.0	722.2	
3	SS	14	3.9					Firm light brown SAND, trace gravel, slightly moist (SP)
						8.0	720.2	
4	SS	29	3.3					Firm light brown SAND, some gravel, slightly moist (SP)

* Approximate unconfined compressive strength based on measurements with a calibrated pocket penetrometer.

DISTANCE BELOW SURFACE IN FEET: 0, 5, 10, 15, 20
DRILL RIG NO. 334
Division lines between deposits represent approximate boundaries between soil types; in-situ, the transition may be gradual.
End of Boring at 10.0'

PROJECT E. Terminal Parking Lot Phase I, Chicago-Rockford Intern. Airport, Rockford, IL
CLIENT Crawford Murphy and Tilly, Inc., Rockford, Illinois
TSC

BORING 4 DATE STARTED 4-20-12 DATE COMPLETED 4-20-12 JOB L-78,307
ELEVATIONS: GROUND SURFACE 726.9; END OF BORING 716.9
WATER LEVEL OBSERVATIONS: ▼ WHILE DRILLING Dry; ▽ AT END OF BORING Dry; ▼ 24 HOURS

SAMPLE NO.	TYPE	N	WC	Qu	γDRY	DEPTH	ELEV.	SOIL DESCRIPTIONS
						1.5	725.4	Very tough dark brown clayey TOPSOIL, trace organic, moist (OL) [Possible Fill]
A 1 B	SS	15	15.0 7.9	2.0*	116			Firm brown SAND, little gravel, trace silt, moist (SP-SM) [Possible Fill]
						3.0	723.9	
2	SS	4	17.5	1.15 1.75*	112			Tough brown silty CLAY, little sand, moist (CL)
						6.0	720.9	
3	SS	5	13.5					Loose brown clayey SAND, occasional silty clay seams, very moist (SC/CL)
						8.0	718.9	
4	SS	21	6.3					Firm brown SAND, some gravel, slightly moist (SP)

* Approximate unconfined compressive strength based on measurements with a calibrated pocket penetrometer.

DISTANCE BELOW SURFACE IN FEET: 0, 5, 10, 15, 20
DRILL RIG NO. 334
Division lines between deposits represent approximate boundaries between soil types; in-situ, the transition may be gradual.
End of Boring at 10.0'

PROJECT E. Terminal Parking Lot Phase I, Chicago-Rockford Intern. Airport, Rockford, IL
CLIENT Crawford Murphy and Tilly, Inc., Rockford, Illinois
TSC

BORING 5 DATE STARTED 4-20-12 DATE COMPLETED 4-20-12 JOB L-78,307
ELEVATIONS: GROUND SURFACE 726.2; END OF BORING 716.2
WATER LEVEL OBSERVATIONS: ▼ WHILE DRILLING Dry; ▽ AT END OF BORING Dry; ▼ 24 HOURS

SAMPLE NO.	TYPE	N	WC	Qu	γDRY	DEPTH	ELEV.	SOIL DESCRIPTIONS
1	SS	8	12.1	2.25*	114			Very tough dark brown and dark gray sandy CLAY and sandy, clayey TOPSOIL, trace organic, moist (CL/OL) (Probable Fill)
						3.0	723.2	
2	SS	7	14.9	0.33 1.0*	115			Stiff brown sandy CLAY, trace fine gravel, moist (CL)
						6.0	720.2	
3	SS	6	11.8					Loose light brown silty, clayey SAND, moist (SC-SM)
						8.0	718.2	
4	SS	23	3.5					Firm light brown SAND, some gravel, slightly moist (SP)

* Approximate unconfined compressive strength based on measurements with a calibrated pocket penetrometer.

DISTANCE BELOW SURFACE IN FEET: 0, 5, 10, 15, 20
DRILL RIG NO. 334
Division lines between deposits represent approximate boundaries between soil types; in-situ, the transition may be gradual.
End of Boring at 10.0'

PROJECT E. Terminal Parking Lot Phase I, Chicago-Rockford Intern. Airport, Rockford, IL
CLIENT Crawford Murphy and Tilly, Inc., Rockford, Illinois
TSC

BORING 6 DATE STARTED 4-20-12 DATE COMPLETED 4-20-12 JOB L-78,307
ELEVATIONS: GROUND SURFACE 728.8; END OF BORING 718.8
WATER LEVEL OBSERVATIONS: ▼ WHILE DRILLING Dry; ▽ AT END OF BORING Dry; ▼ 24 HOURS

SAMPLE NO.	TYPE	N	WC	Qu	γDRY	DEPTH	ELEV.	SOIL DESCRIPTIONS
1	SS	13	11.2	1.75*	124			Very tough dark brown sandy CLAY and sandy, clayey TOPSOIL, little fine sand, trace gravel, crushed stone and organic, moist (CL/OL) (Probable Fill)
						3.0	725.8	
2	SS	6	16.0	1.15 1.25*	112			Tough brown silty CLAY, little fine sand, moist (CL)
						6.0	722.8	
3	SS	7	14.9	1.25*	115			Tough brown sandy CLAY, very moist (CL)
						9.0	719.8	
A 4 B	SS	11	10.5 10.5					Firm brown silty, clayey SAND, trace gravel, moist (SC-SM)

* Approximate unconfined compressive strength based on measurements with a calibrated pocket penetrometer.

DISTANCE BELOW SURFACE IN FEET: 0, 5, 10, 15, 20
DRILL RIG NO. 334
Division lines between deposits represent approximate boundaries between soil types; in-situ, the transition may be gradual.
End of Boring at 10.0'

PROJECT E. Terminal Parking Lot Phase I, Chicago-Rockford Intern. Airport, Rockford, IL
CLIENT Crawford Murphy and Tilly, Inc., Rockford, Illinois
TSC

BORING 7 DATE STARTED 4-20-12 DATE COMPLETED 4-20-12 JOB L-78,307
ELEVATIONS: GROUND SURFACE 728.0; END OF BORING 718.0
WATER LEVEL OBSERVATIONS: ▼ WHILE DRILLING Dry; ▽ AT END OF BORING Dry; ▼ 24 HOURS

SAMPLE NO.	TYPE	N	WC	Qu	γDRY	DEPTH	ELEV.	SOIL DESCRIPTIONS
1	SS	22	10.7	2.5*	121			Very tough to tough dark brown and brown sandy CLAY and sandy, clayey TOPSOIL, trace to little gravel and crushed stone, moist (CL/OL) (Probable Fill)
						3.5	724.5	
A 2 B	SS	10	19.4 16.0	1.40 1.25* 1.45 1.25*	103 115	4.0	724.0	Tough dark gray very silty CLAY, little fine sand, very moist (CL)
						6.0	722.0	
3	SS	5	12.3	0.25*				Tough grayish-brown very silty CLAY, trace sand, very moist (CL)
4	SS	6	10.8					Loose brown silty, clayey SAND, with occasional very soft sandy clay seams, moist (SC-SM/CL)

* Approximate unconfined compressive strength based on measurements with a calibrated pocket penetrometer.

DISTANCE BELOW SURFACE IN FEET: 0, 5, 10, 15, 20
DRILL RIG NO. 334
Division lines between deposits represent approximate boundaries between soil types; in-situ, the transition may be gradual.
End of Boring at 10.0'

PROJECT E. Terminal Parking Lot Phase I, Chicago-Rockford Intern. Airport, Rockford, IL
CLIENT Crawford Murphy and Tilly, Inc., Rockford, Illinois
TSC

BORING 8 DATE STARTED 4-20-12 DATE COMPLETED 4-20-12 JOB L-78,307
ELEVATIONS: GROUND SURFACE 727.7; END OF BORING 717.7
WATER LEVEL OBSERVATIONS: ▼ WHILE DRILLING Dry; ▽ AT END OF BORING Dry; ▼ 24 HOURS

SAMPLE NO.	TYPE	N	WC	Qu	γDRY	DEPTH	ELEV.	SOIL DESCRIPTIONS
						1.5	726.2	Dark brown and brown sandy CLAY and sandy, clayey TOPSOIL, trace to little gravel, moist (CL/OL) (Probable Fill)
1	SS	9	11.4	3.25*	121			Very tough brown sandy CLAY, moist (CL)
						3.0	724.7	
2	SS	7	4.6					Loose reddish-brown silty, clayey SAND, slightly moist (SC-SM)
						6.0	721.7	
3	SS	12	3.2					Firm light brown SAND, little gravel, slightly moist (SP)
						8.0	719.7	
4	SS	17	3.6					Firm light brown SAND, some gravel, slightly moist (SP)

* Approximate unconfined compressive strength based on measurements with a calibrated pocket penetrometer.

DISTANCE BELOW SURFACE IN FEET: 0, 5, 10, 15, 20
DRILL RIG NO. 334
Division lines between deposits represent approximate boundaries between soil types; in-situ, the transition may be gradual.
End of Boring at 10.0'

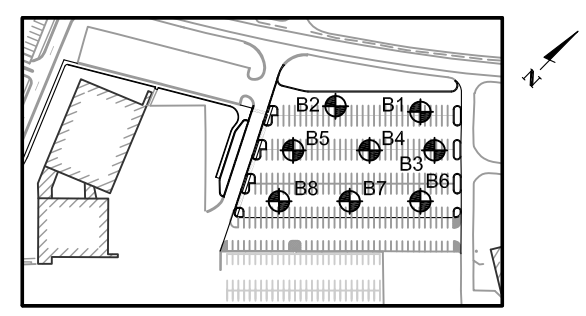

KEY MAP

IL. CONTRACT: RO022
IL. LETTING ITEM: 4A
IL. PROJECT: RFD-4187
A.I.P. PROJECT:

SURVEY BOOK # 12258-02-00

REVISIONS		
NUMBER	BY	DATE

0 1 2
THIS BAR IS EQUAL TO 2" AT FULL SCALE (34X22).

GREATER ROCKFORD AIRPORT AUTHORITY
CHICAGO ROCKFORD INTERNATIONAL AIRPORT
ROCKFORD, IL

EAST TERMINAL AUTO PARKING LOT, PHASE 1

ENGINEERING INFORMATION

© Copyright CMT, Inc.

CMT
CRAWFORD, MURPHY & TILLY, INC.
CONSULTING ENGINEERS
License No. 184-000613

DESIGN BY:	MLK
DRAWN BY:	CMT
CHECKED BY:	MLK
APPROVED BY:	DLP
DATE:	07/06/2012
JOB No:	12285-02-00/06

FINAL

SHEET 31 OF 31 SHEETS

XREF DWG: tb.dwg
tbcint.dwg
Rtd E Term Base.DWG
UPDATE BY: Sean Smith
LAYOUT: ENGINFO
DATE: Friday, July 06, 2012 13:50:22
FILE: K:\Rockford\12258-02_TermPkLotPH1\Draw\Sheets\ENGINFO.dwg