F.A.I. RTE.	SECTION	COUNTY	TOTAL SHEETS	SHEET NO.
90/94	*	COOK	312	213
STA.		TO STA.		
FED. ROAD DIST. NO. 1	ILLINOIS	FED. AID PROJECT		

60A62 * (1919.15, 2021-922 PT1 & PT2) R-1

SINGLE FACE CONCRETE BARRIER - STA 4445+31.46

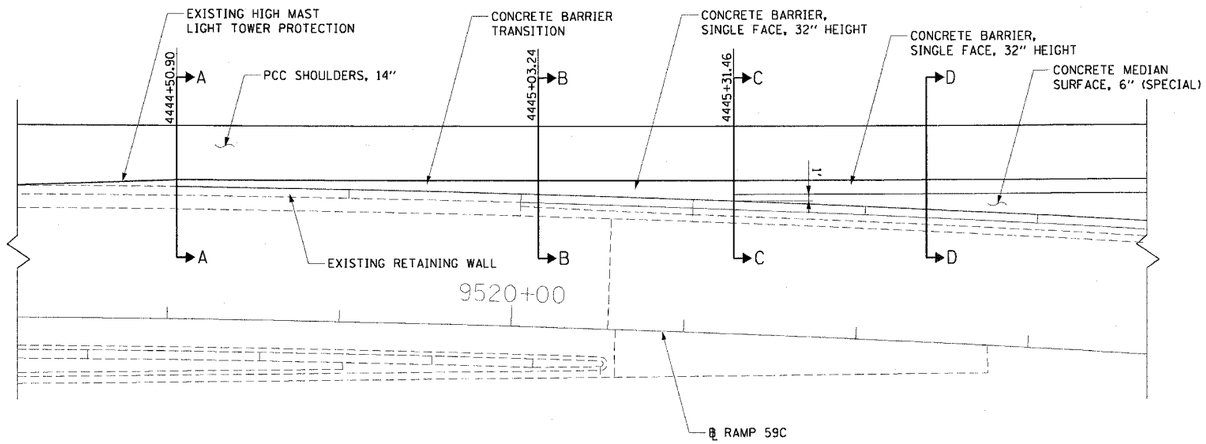

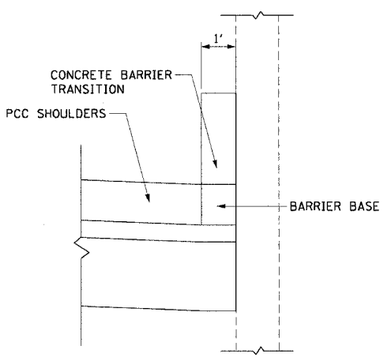

SECTION A-A
N.T.S.

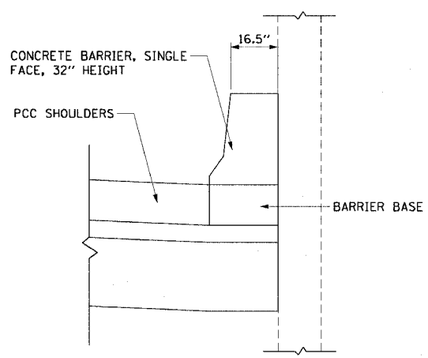

SECTION B-B
N.T.S.

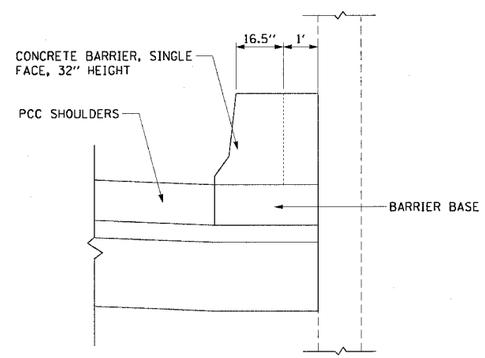

SECTION C-C
N.T.S.

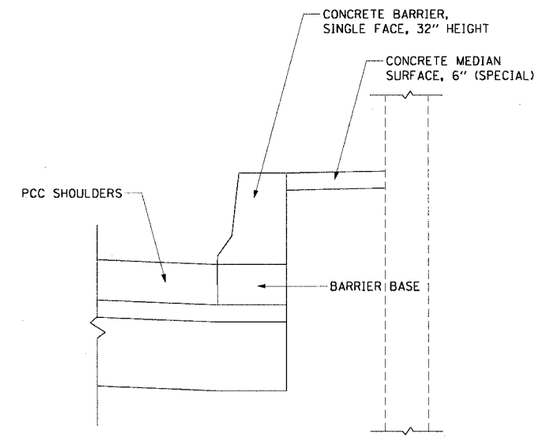

SECTION D-D
N.T.S.

NOTES:

1. SEE RDT-2 FOR SINGLE FACE CONCRETE BARRIER DETAILS.
2. BARRIER WALL SHALL MATCH THE EXISTING LIGHT TOWER PROTECTION AT STA 4444+50.96.
3. EXTRA WIDTH OF BARRIER WALL SHALL BE PAID FOR AS CONC BARRIER, SINGLE FACE, 32" HEIGHT

RDT-6

REVISIONS	
NAME	DATE

ILLINOIS DEPARTMENT OF TRANSPORTATION
F.A.I. 90/94 (DAN RYAN EXPRESSWAY)
63RD STREET TO GARFIELD BLVD (NB LOCAL LANES)

ROADWAY DETAILS
SINGLE FACE CONCRETE BARRIER
STA 4445+31.46

SCALE: 1"=10' DRAWN BY: NJH
DATE: June 9, 2006 CHECKED BY: RMG

CTE | AECOM

p:\pr0468cwi\08-ctrs 18 & 19\sht\cmt 18\roadway details\rdt06\rdt06.dgn 6/5/2006 9:33:25 AM