STATE OF ILLINOIS
DEPARTMENT OF TRANSPORTATION

ROUTE NO.	SECTION	COUNTY	TOTAL SHEETS	SHEET NO.
FAI-55	**	WILL	50	45
FED. ROAD DIST. NO. 7		ILLINOIS	FED. AID PROJECT-	

SHEET NO. 8
13 SHEETS

** SECTION 2005-063 I
CONTRACT NO. 60A67

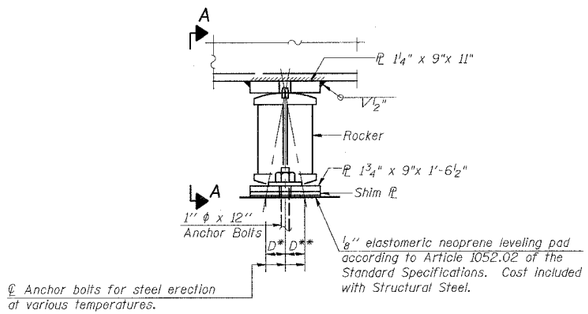

ELEVATION AT PIER 1 (NB & SB)

(2 Req'd NB, 2 Req'd SB)

* D=⅛"/100 ft. of exp. for every 15° below the normal temp. of 50°F.

** D=⅛"/100 ft. of exp. for every 15° above the normal temp. of 50°F.

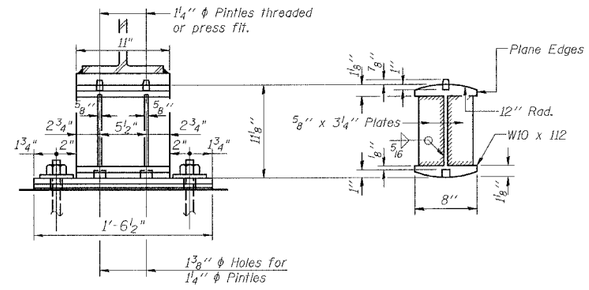

SECTION A-A

DETAIL OF ROCKER

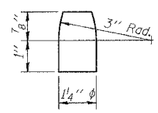

DETAIL OF PINTLE

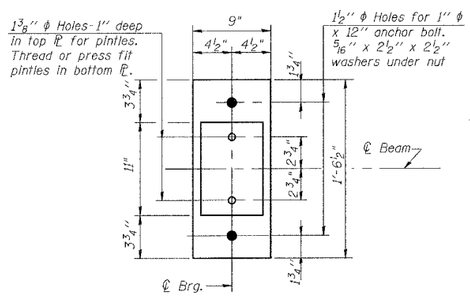

PLAN

Note:

1. See Sheet No. 11 for Anchor Bolt Installation.

DESIGNED	J. ZUO
CHECKED	J. GRAINAWI
DRAWN	J. ZUO
CHECKED	J. GRAINAWI

Date: 5/15/2006

PARSONS BRINCKERHOFF

STRUCTURAL STEEL DETAILS II
I-55 OVER MS (ABANDONED) R.R.
FAI ROUTE 55-SEC. 2005-063 I
WILL COUNTY
STA. 710+34.86
STRUCTURE NO. 099-0022 (NB)
STRUCTURE NO. 099-0023 (SB)