F.A.I.	SECTION	COUNTY	TOTAL SHEETS	SHEET NO.
94/90	•	COOK	565	416A
STA.		TO STA.		
FED. ROAD DIST. NO.	ILLINOIS	FED. AID PROJECT		

62301 •(2021-922 PT2 ETC 2324.6-1P) R-10

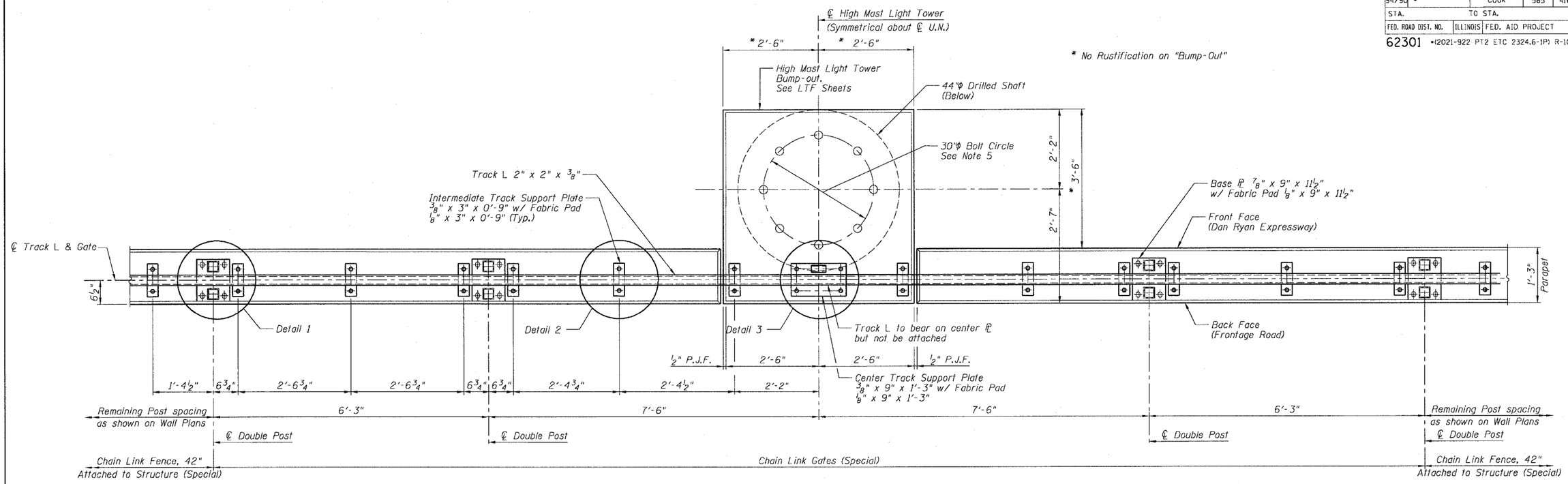

PLAN - GATE IN OPEN POSITION

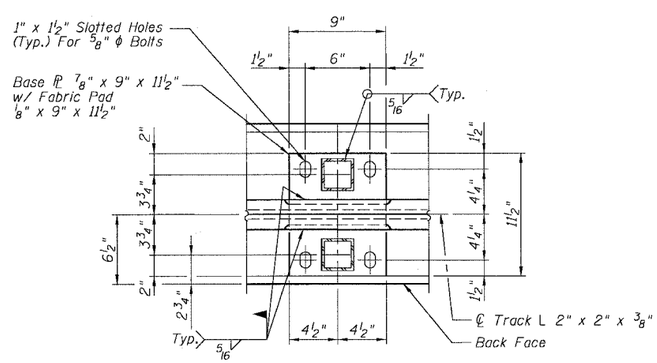

DETAIL 1

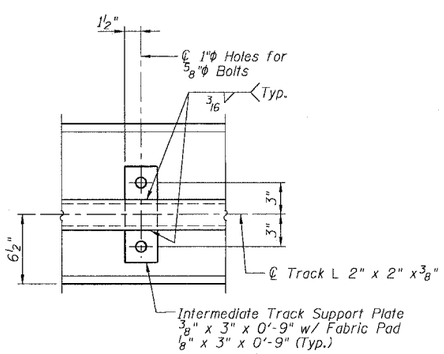

DETAIL 2

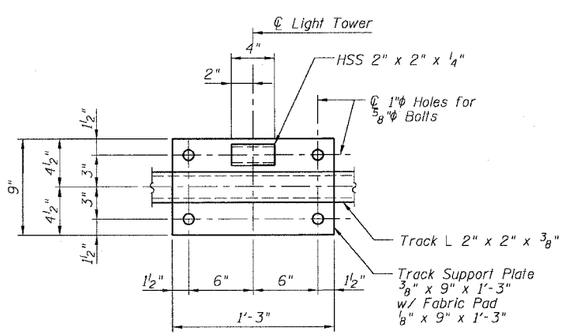

DETAIL 3

NOTES:

1. All Bolts shall be Stainless Steel conforming to ASTM F593-98 and F594-98.
2. All Pipes and Bars shall be Hot-Dipped Galvanized after fabrication.
3. For Back Face Elevations, See Sheet SD3.
4. Attachment of Intermediate Track Support ℙ and Center Track Support ℙ shall follow alternate detail as described on Sheet SD3.
5. For HMLT Anchor Rod details see District 1 Std. BE501.

SHEET SD2A OF SD11

REVISIONS	
NAME	DATE

ILLINOIS DEPARTMENT OF TRANSPORTATION

F.A.I. 94/90 (DAN RYAN EXPRESSWAY)

GARFIELD BLVD TO 31ST STREET (NB LOCAL LANES)

CHAIN LINK FENCE, 42" ATTACHED TO STRUCTURE (SPECIAL) AND GATE TYPICAL GATE PLAN AND NOTES

SCALE: NTS — DRAWN BY: LAM

DATE: JUNE 9, 2006 — CHECKED BY: BLU

BOWMAN, BARRETT & ASSOCIATES INC.
CONSULTING ENGINEERS
Chicago, Illinois
312.228.0100
www.bbandainc.com

n:\660cadd\dh\NB-RETAINING WALLS\660CRT3.dgn 6/8/2006 1:38:28 PM