STATE OF ILLINOIS
DEPARTMENT OF TRANSPORTATION

ROUTE NO.	SECTION	COUNTY	TOTAL SHEETS	SHEET NO.
F.A.I. RTE. 90/94	*	COOK	588	286
FED. ROAD DIST. NO. 1	ILLINOIS	FED. AID PROJECT-		

* (1818, ETC, 2324.6-1P) R-11 62303

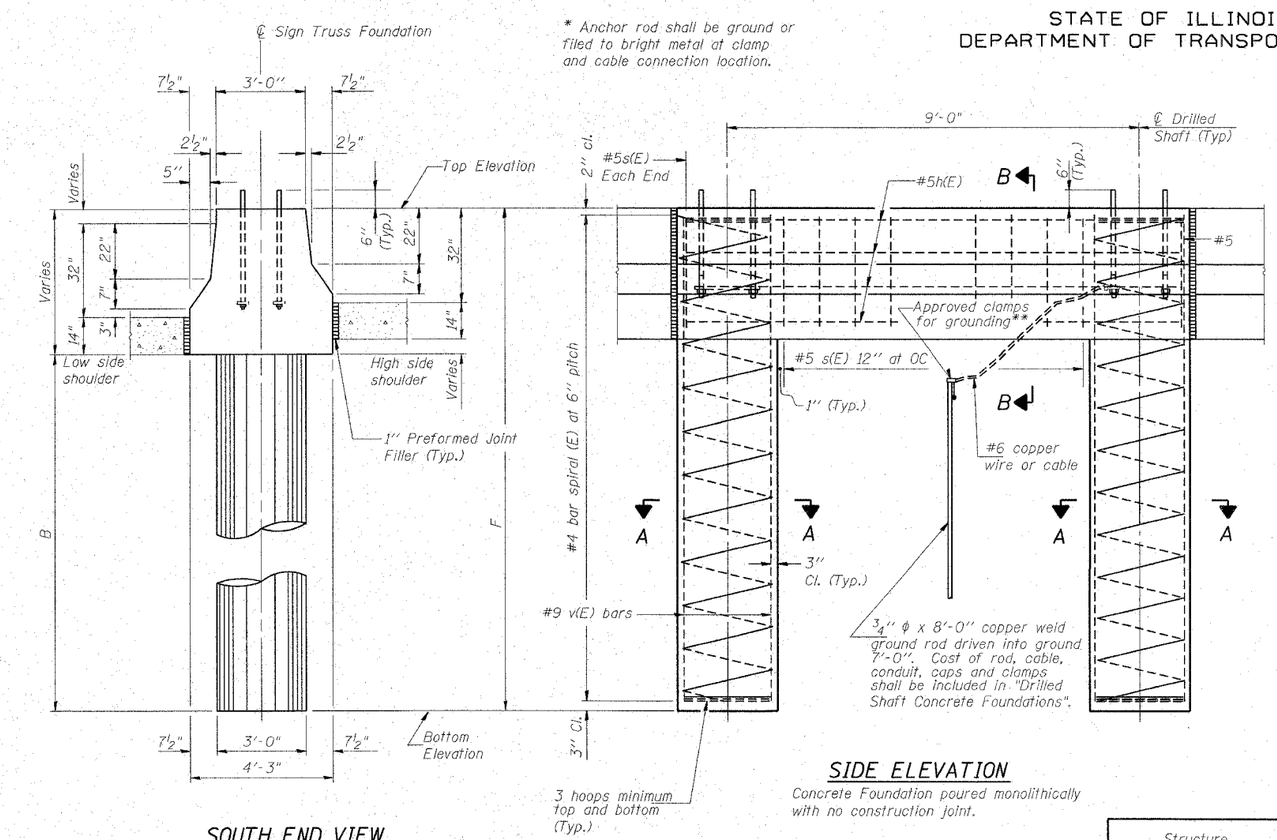

SOUTH END VIEW

SIDE ELEVATION

Concrete Foundation poured monolithically with no construction joint.

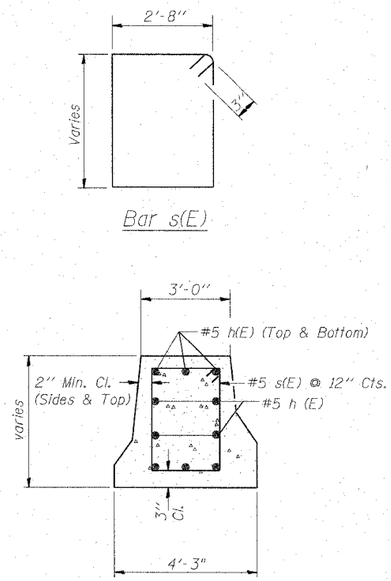

SECTION B-B

NOTES:

The foundation dimensions shown are based on the presence of mostly cohesive soils with an average Unconfined Compressive Strength (Qu) of at least 1.25 tsf, which must be determined by previous soil investigations at the jobsite. When other conditions are indicated, the boring data will be included in the plans and the foundation dimensions shown will be the result of site specific designs.

If the conditions encountered are different than those indicated, the Contractor shall notify the Engineer to determine if the foundation dimensions need to be modified. If dimensions "B" or "F" are revised by more than 12" by the Contractor, "as-built" plans shall be prepared and submitted to the District Bureau of Operations for future reference.

No sonotubes or decomposable forms shall be used below the lower conduit entrance.

Permanent metal forms or other shielding may not be left in place below that elevation without the Engineer's written permission.

Concrete shall be placed monolithically, without construction joints.

Backfill shall be placed per Article 502 of Standard Specification and prior to erection of support column.

A normal surface finish followed by a Bridge Seat Sealer application will be required on concrete surfaces above the lowest elevation 6" below finished ground line. Cost included in "Drilled Shaft Concrete Foundation".

Face of median support foundation shall match dimensions of permanent barrier wall F shape.

BAR LIST - EACH FOUNDATION

Bar	Number	Size	Length	Shape
h(E)	10	#5	10'-11"	——
s(E)	8	#5	Varies	□
v(E)	24	#9	F less 0'-5"	——
#4(E) bar spiral _ see Side Elevation				

LEFT FOUNDATION USES SINGLE FACE MEDIAN SUPPORT FOUNDATION

Structure Number	Station	Left Foundation				Right Foundation				Class SI Concrete (Cu. Yds.)
		Elevation Top	Elevation Bottom	B	F	Elevation Top	Elevation Bottom	B	F	
1S016I094R056.8	3524+00.00	3.42'	-11.13'	9.0'	14.55'	----	----	----	----	12.1

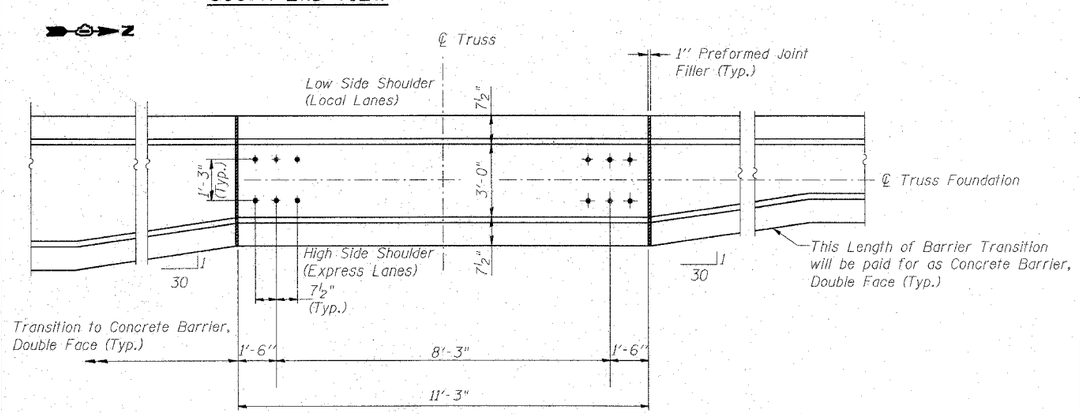

PLAN

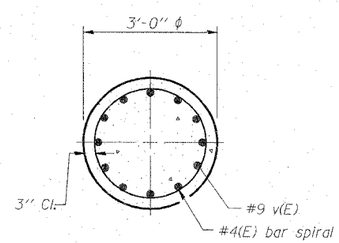

SECTION A-A

DESIGNED	-	JSS
CHECKED	-	MJP
DRAWN	-	JSS
CHECKED	-	MJP

- 20

EXAMINED

ENGINEER OF STRUCTURAL SERVICES

PASSED

ENGINEER OF BRIDGES AND STRUCTURES

MODIFIED BY CTE ENGINEERS, INC. FROM OS-F3

SGN-34

OVERHEAD SIGN STRUCTURES
SPREAD FOOTING DETAILS

F.A.I. 90/94 (DAN RYAN EXPRESSWAY)
GARFIELD BLVD TO 31ST STREET (SB LOCAL LANES)
PROPOSED IMPROVEMENT

DOUBLE FACE MEDIAN SUPPORT FOUNDATION

6/7/2006 11:43:08 AM

P:\Proj\Chi\IB-Chrs 18 & 19\STNCnr_19\Signfrg\SS\90142A.sht