Notes: For Bar Splicer details see sheet 13 of 14.
Reinforcement bars designated (E) shall be epoxy coated.
Space reinforcement in cap to miss dowel rods.

STATE OF ILLINOIS
DEPARTMENT OF TRANSPORTATION

| ROUTE NO. | SECTION | COUNTY | TOTAL SHEETS | SHEET NO. |
|---|---|---|---|---|
| FAS 1671 | ** | DOUGLAS | 181 | 80 |
| FED. ROAD DIST. NO. 7 | | ILLINOIS | FED. AID PROJECT- | |

SHEET NO. 10
14 SHEETS

Contract #70258 **144SBR-2 & 22VBR-1

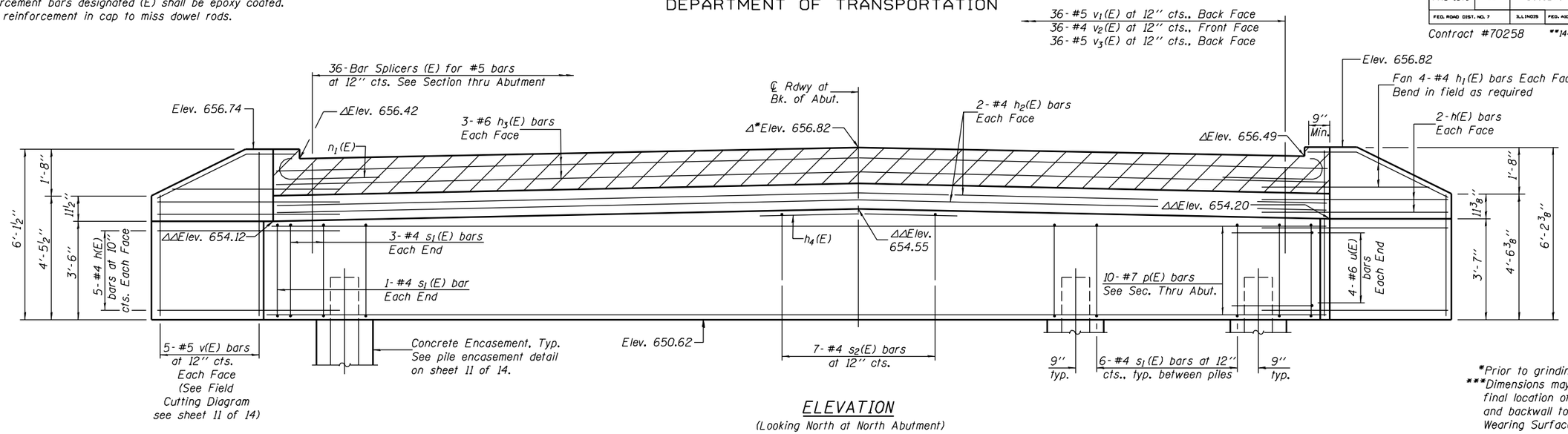


ELEVATION
(Looking North at North Abutment)

*Prior to grinding
***Dimensions may vary depending on final location of exterior beams. Hatched area and backwall to be poured after Concrete Wearing Surface is in place and cured.

Δ Elevation at Front Face of Hatch Block.
ΔΔ Elevation at Front Face of Backwall.

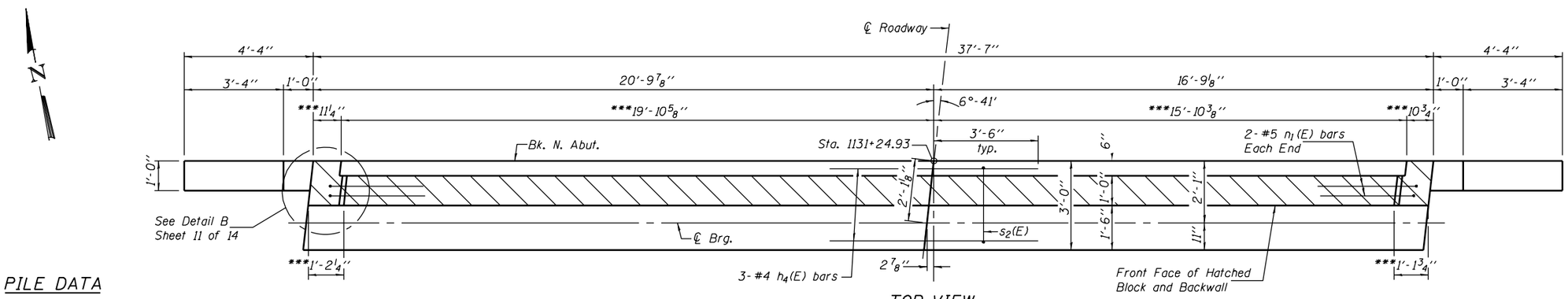


TOP VIEW

PILE DATA

Type: HP12x53
Design Capacity: 40 tons
Required Bearing: 60 tons
Est. Length: 24 ft.
No. Required: 5+1 Test Pile

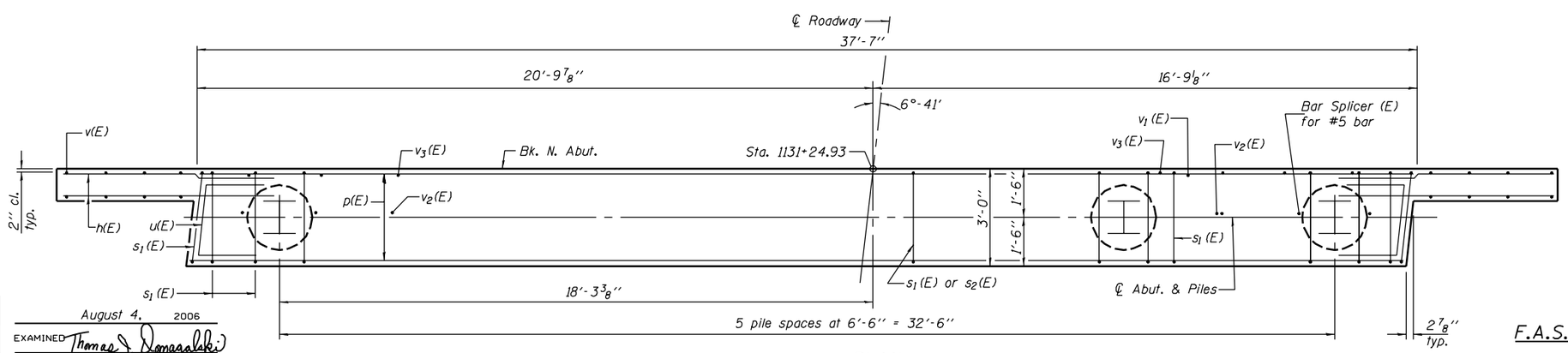


PLAN

| | |
|---|---|
| DESIGNED | SMR |
| CHECKED | PRL |
| DRAWN | BECKY M. LEACH |
| CHECKED | SMR/PRL |

August 4, 2006
EXAMINED Thomas J. Domagalski
ENGINEER OF BRIDGE DESIGN
PASSED Ralph E. Anderson
ENGINEER OF BRIDGES AND STRUCTURES

NORTH ABUTMENT
F.A.S. ROUTE 1671 - SECTION 144SBR-2
DOUGLAS COUNTY
STATION 1130+72.93
STRUCTURE NO. 021-0062