ROUTE NO.	SECTION	COUNTY	TOTAL SHEETS	SHEET NO.
FAS 819	101BR-3	WASHINGTON		22
FED. ROAD DIST. NO. 7	ILLINOIS	FED. AID PROJECT-		

SHEET NO. 13
15 SHEETS

CONTRACT NO. 76964

*Existing drain holes to be unplugged.
Cost included with Concrete Removal.

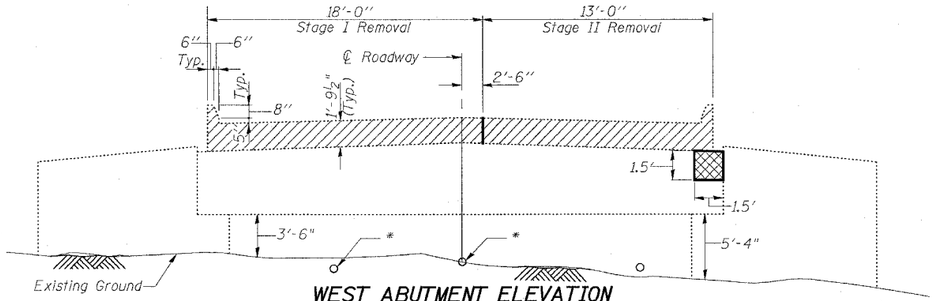

WEST ABUTMENT ELEVATION
(Looking West)

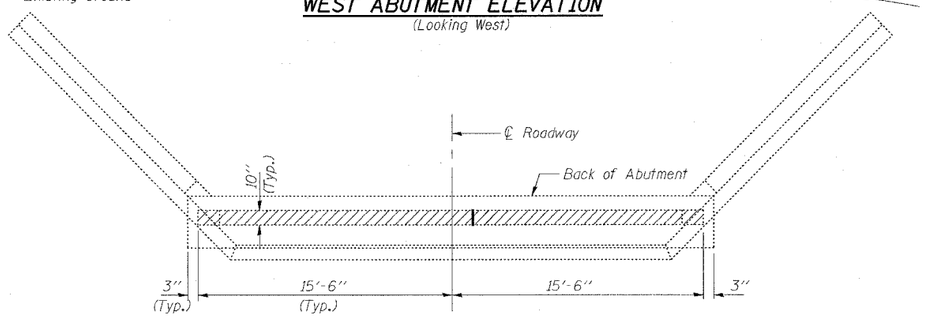

WEST ABUTMENT PLAN

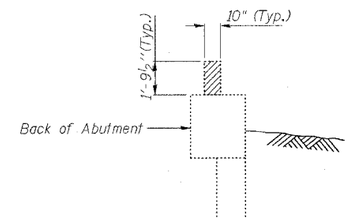

END VIEW

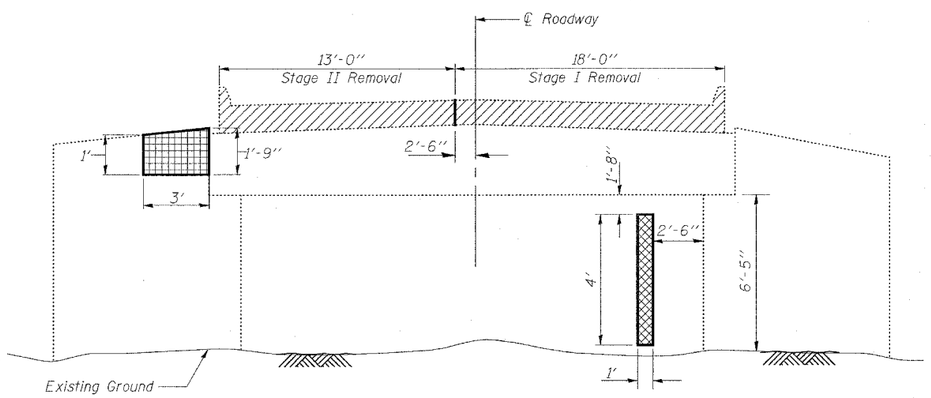

EAST ABUTMENT ELEVATION
(Looking East)

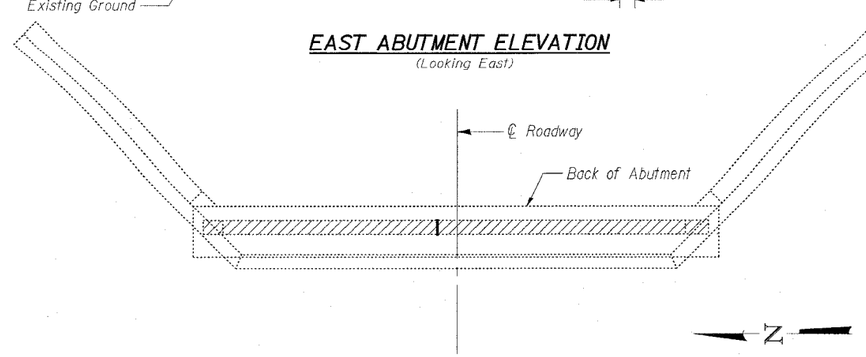

EAST ABUTMENT PLAN

Denotes Concrete Removal

Denotes Structural Repair of Concrete (Depth Equal to or Less Than 5")

Denotes Structural Repair of Concrete (Depth Greater Than 5")

BILL OF MATERIAL-TWO ABUTMENTS

ITEM	UNIT	QTY
Concrete Removal	Cu. Yd.	3.5
Structural Repair of Concrete (Depth Equal to or Less Than 5")	Sq. Ft.	6
Structural Repair of Concrete (Depth Greater Than 5")	Sq. Ft.	4

ILLINOIS DEPARTMENT OF TRANSPORTATION

SHEET TITLE
ABUTMENT CONCRETE REMOVAL AND REPAIR DETAILS

PROJECT
IL RTE 177 OVER GRAND POINT CRK
FAS ROUTE 819 SECTION 101BR-3
WASHINGTON COUNTY
STATION 160+70.00
STRUCTURE NUMBER 095-0021

PROJECT NO. 05028-4
SCALE
DATE 05/09/06
DRAWN BY TFG
CHECKED BY CME/MCB

COOMBE-BLOXDORF P.C.
Engineers/Land Surveyors
Springfield, Illinois
Design Firm License No. 184-002703

DRAWING NO. 13
OF 15 SHTS

PLOT DATE = 5/15/2006
FILE NAME = D:\bsn-095-0021-sht-13-abut-conc-removal.dgn
PLOT SCALE = 0:0.9722 ' / IN.
USER NAME = gelinh