F.A. RTE.	SECTION	COUNTY	TOTAL SHEETS	SHEET NO.
3753	04-00037-00-WR	WILL	92	26
STA. 5+03		TO STA. 15+50		
FED. ROAD DIST. NO.	ILLINOIS	FED. AID PROJECT		

83858

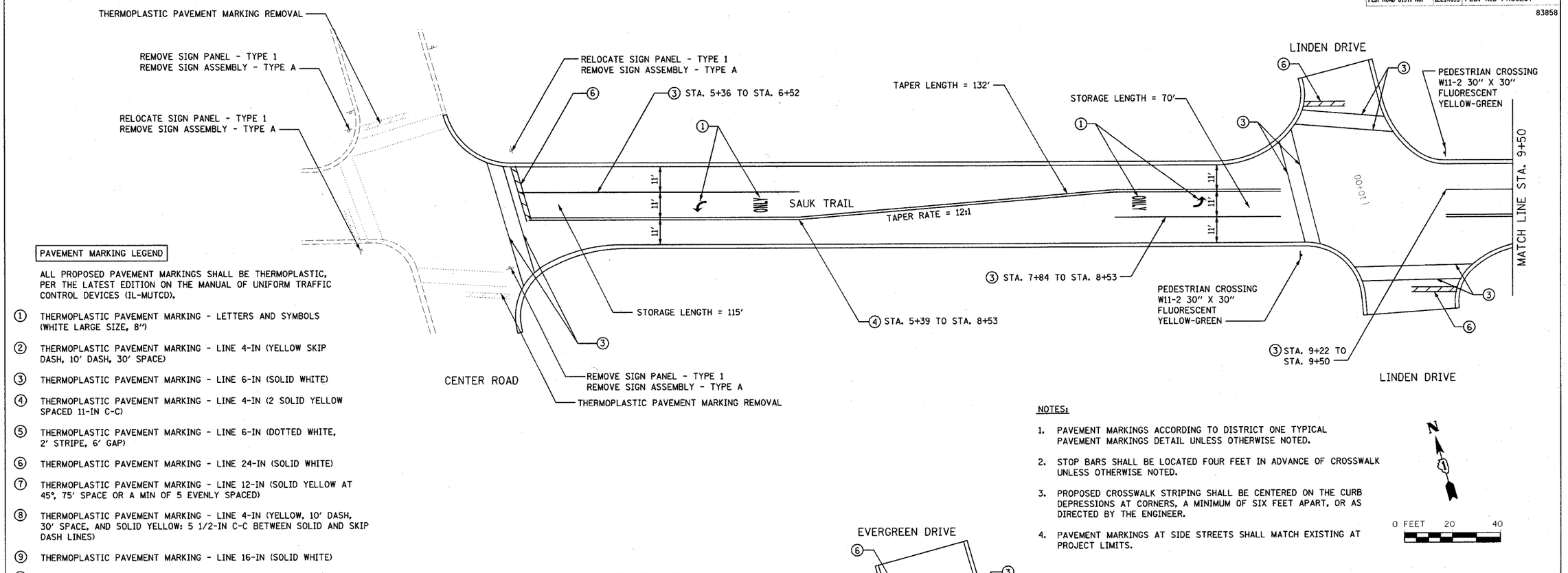

PAVEMENT MARKING LEGEND

ALL PROPOSED PAVEMENT MARKINGS SHALL BE THERMOPLASTIC, PER THE LATEST EDITION ON THE MANUAL OF UNIFORM TRAFFIC CONTROL DEVICES (IL-MUTCD).

1. THERMOPLASTIC PAVEMENT MARKING - LETTERS AND SYMBOLS (WHITE LARGE SIZE, 8')
2. THERMOPLASTIC PAVEMENT MARKING - LINE 4-IN (YELLOW SKIP DASH, 10' DASH, 30' SPACE)
3. THERMOPLASTIC PAVEMENT MARKING - LINE 6-IN (SOLID WHITE)
4. THERMOPLASTIC PAVEMENT MARKING - LINE 4-IN (2 SOLID YELLOW SPACED 11-IN C-C)
5. THERMOPLASTIC PAVEMENT MARKING - LINE 6-IN (DOTTED WHITE, 2' STRIPE, 6' GAP)
6. THERMOPLASTIC PAVEMENT MARKING - LINE 24-IN (SOLID WHITE)
7. THERMOPLASTIC PAVEMENT MARKING - LINE 12-IN (SOLID YELLOW AT 45°, 75' SPACE OR A MIN OF 5 EVENLY SPACED)
8. THERMOPLASTIC PAVEMENT MARKING - LINE 4-IN (YELLOW, 10' DASH, 30' SPACE, AND SOLID YELLOW: 5 1/2-IN C-C BETWEEN SOLID AND SKIP DASH LINES)
9. THERMOPLASTIC PAVEMENT MARKING - LINE 16-IN (SOLID WHITE)
10. THERMOPLASTIC PAVEMENT MARKING - LETTERS AND SYMBOLS (WHITE 6')

NOTES:

1. PAVEMENT MARKINGS ACCORDING TO DISTRICT ONE TYPICAL PAVEMENT MARKINGS DETAIL UNLESS OTHERWISE NOTED.
2. STOP BARS SHALL BE LOCATED FOUR FEET IN ADVANCE OF CROSSWALK UNLESS OTHERWISE NOTED.
3. PROPOSED CROSSWALK STRIPING SHALL BE CENTERED ON THE CURB DEPRESSIONS AT CORNERS, A MINIMUM OF SIX FEET APART, OR AS DIRECTED BY THE ENGINEER.
4. PAVEMENT MARKINGS AT SIDE STREETS SHALL MATCH EXISTING AT PROJECT LIMITS.

N

0 FEET 20 40

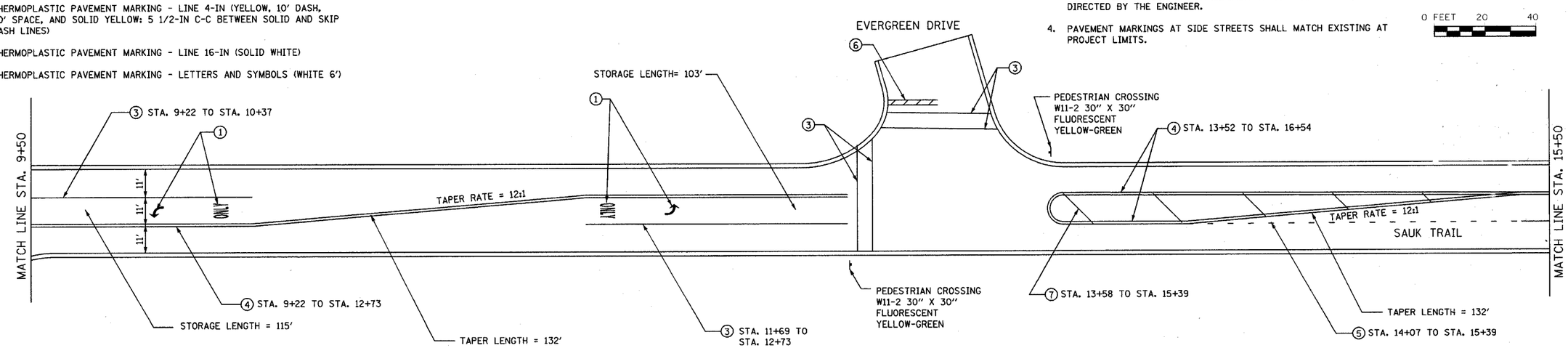

STRAND ASSOCIATES, INC.® ENGINEERS

REVISIONS	
NAME	DATE

ILLINOIS DEPARTMENT OF TRANSPORTATION

FAU 3753
SAUK TRAIL

PROPOSED PAVEMENT MARKING PLAN
AND SIGNING PLAN

SCALE: VERT. N.T.S.
HORIZ. AS SHOWN
DATE 6/19/2006

DRAWN BY JBH
CHECKED BY JRM

FILENAME: S:\061\061-0659\0031\003\Microsys\Stripplan\pkan1.dgn
DATE: 6/19/2006
TIME: 4:58:19 PM