REINFORCING BARS SCHEDULE					
TYPE	QUANTITY PER INLET	DIMENSIONS A	DIMENSIONS B	SIZE	APPROX. WT. OF BARS IN INLET
A	2	3'-4"	2'-4"	#5	16.7

CONCRETE QUANTITIES				
D INSIDE DIA. OF PIPE	CU. YARDS TO SUBTRACT FOR 8" WALL	INVERT FORM	BOTTOM SIDES AND TOP Y	TOTAL CU. YDS.
12"	.036	.120	3'	1.30
15"	.051	.152	4'	1.62
18"	.071	.134	5'	1.93
21"	.095	.140	6'	2.40
24"	.121	.142	7'	2.55
30"	.175	.146	8'	2.86
			9'	3.18
			10'	3.49
			11'	3.80
			12'	4.11
			13'	4.42
			14'	4.74

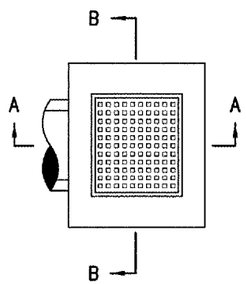

PLAN

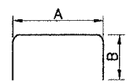

REINFORCING STEEL BAR TYPE

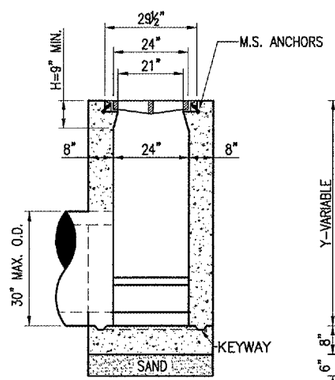

SECTION A-A

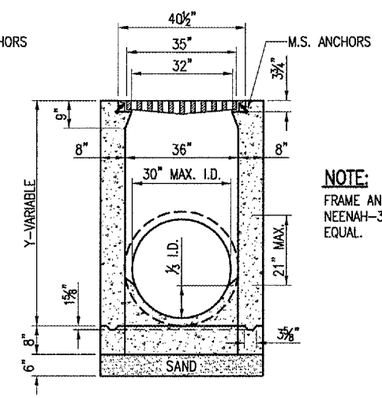

SECTION B-B

INLET TYPE A

NOTE:
FRAME AND GRATE WILL BE A NEENAH-3475, OR APPROVED EQUAL.

CAST IRON FRAME AND COVER

NEENAH R-6013, DEETER 1810, EAST JORDAN 2790-6 OR APPROVED EQUAL

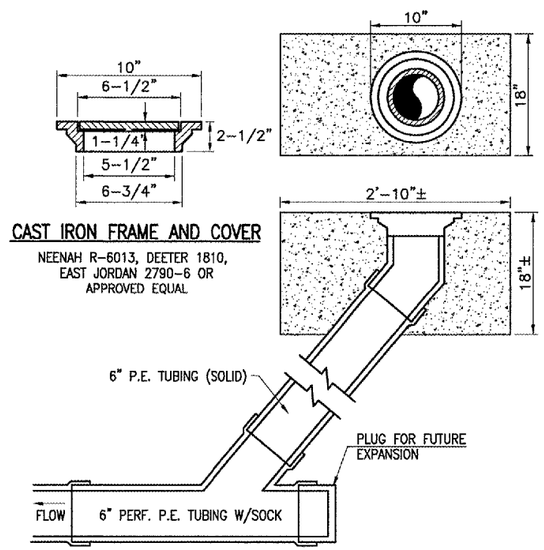

CLEANOUT HOLE-TYPE B

INSPECTION HOLE NOTES

DIAMETER OF PIPE AS SPECIFIED.

TOP OF INSPECTION HOLES SHALL BE 2" ABOVE FINISH GROUND LINE AT LOCATION SHOWN ON PLANS.

1/2" CHAMFER TO BE USED ON ALL EXPOSED EDGES OF INSPECTION HOLES.

THE CONCRETE SHALL BE STRUCTURAL PORTLAND CEMENT CONCRETE (NON-REINFORCED) IN ACCORDANCE WITH ITEM 610.

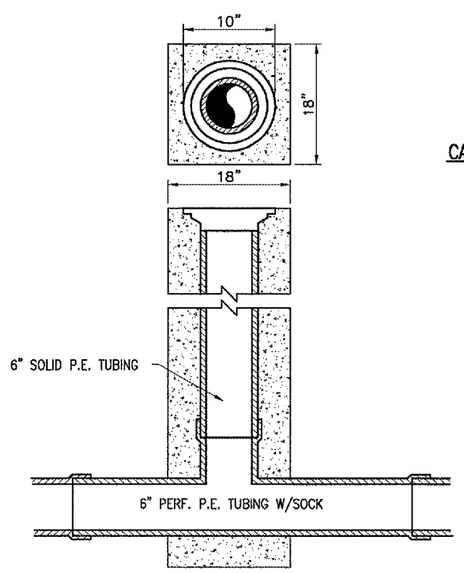

INSPECTION HOLE-TYPE A

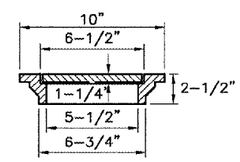

CAST IRON FRAME AND COVER

NEENAH R-6013, DEETER 1810, EAST JORDAN 2790-6 OR APPROVED EQUAL

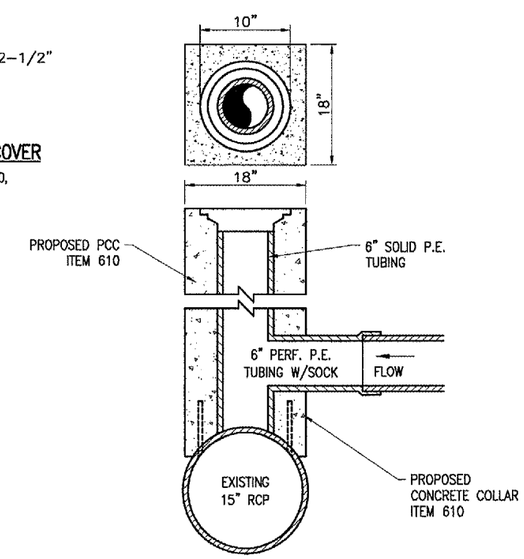

INSPECTION HOLE DETAIL - TYPE B

"NOT TO SCALE"

DATE	REVISION	BY

QUINCY REGIONAL AIRPORT
BALDWIN FIELD
ADAMS COUNTY, ILLINOIS

IL. PROJ.: UIN-3338 A.I.P. PROJ.: 3-17-0085-XX

HSI Project No. 82406TYCD.0240
Filename R-131DRN.DWG
Scale NOT TO SCALE
Date 06/19/06

LAYOUT	RAW	06/19/06
DRAWN	BAK	06/19/06
REVIEWED	RAW	07/12/06

HANSON
Hanson Professional Services Inc.
1625 South Sixth Street
Springfield, Illinois 62703-2886
Offices Nationwide

REALIGN AND WIDEN TAXIWAY "C"

PROPOSED DRAINAGE DETAILS

JUL 11, 2006 10:31 PM RAW
I:\AIRPORTS\QUINCY\82406TYCD\AIRPORT\SHEETS\R-131DRN.DWG - DETAILS