G:\AIRPORT\A06T015\OVERALL PLAN.DWG

QUAD CITY INTERNATIONAL AIRPORT
RUNWAY 13-31 PFC OVERLAY
ILL. PROJ. MLI-3574, QU099
SHEET 10 OF 12

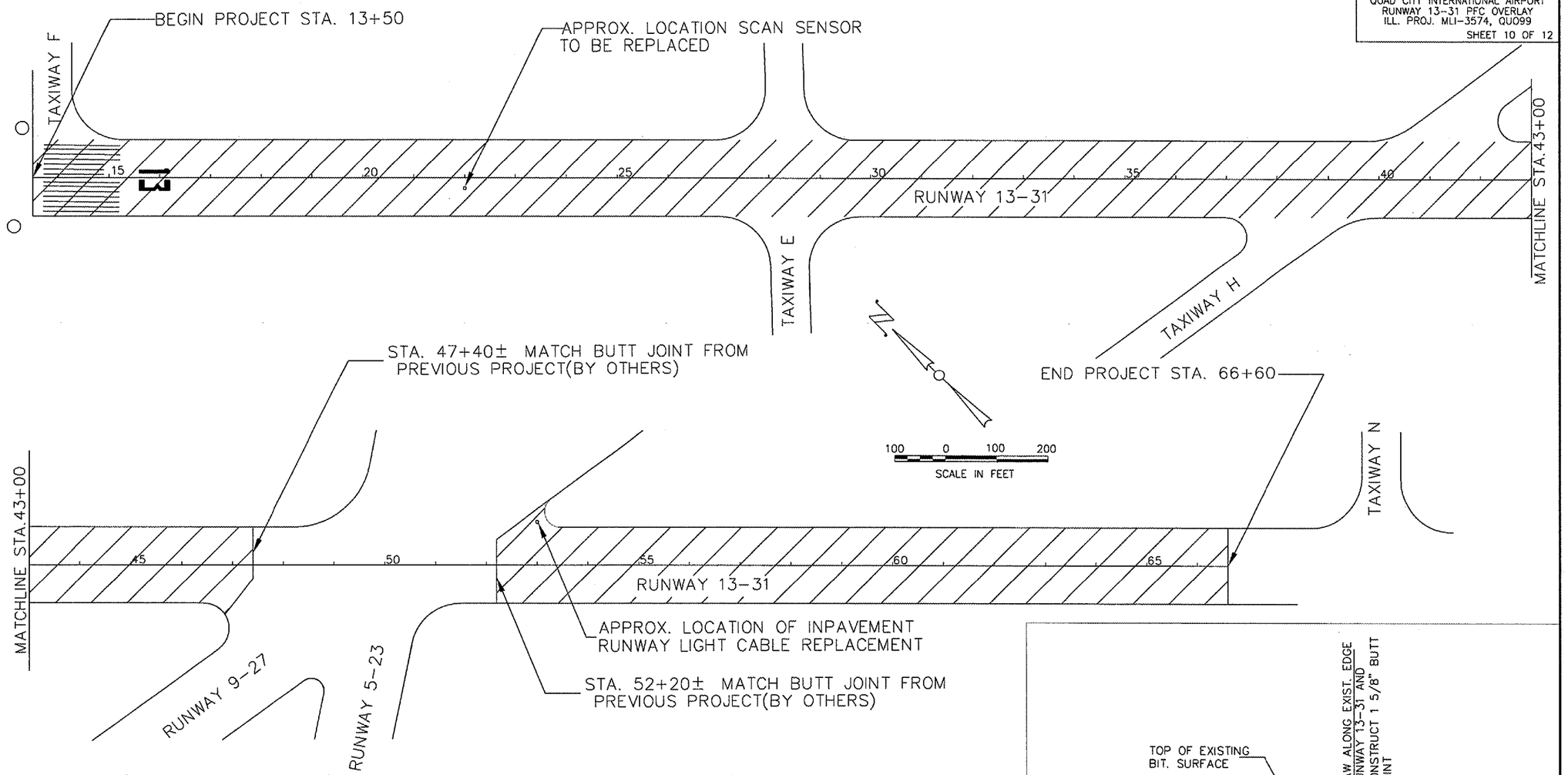

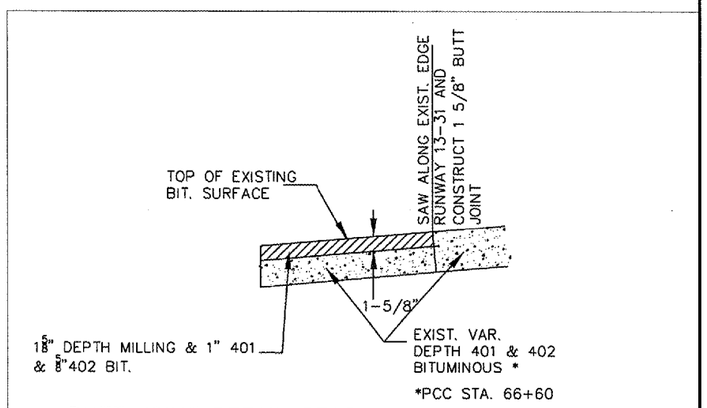

BUTT JOINT DETAIL STAS. 13+50,47+40,52+20,66+60,& TAXIWAYS

RUNWAY 13-31 OVERALL PLAN 10/12