QUAD CITY INTERNATIONAL AIRPORT
RUNWAY 13-31 PFC OVERLAY
ILL. PROJ. MLI-3574, QU099
SHEET 11 OF 12

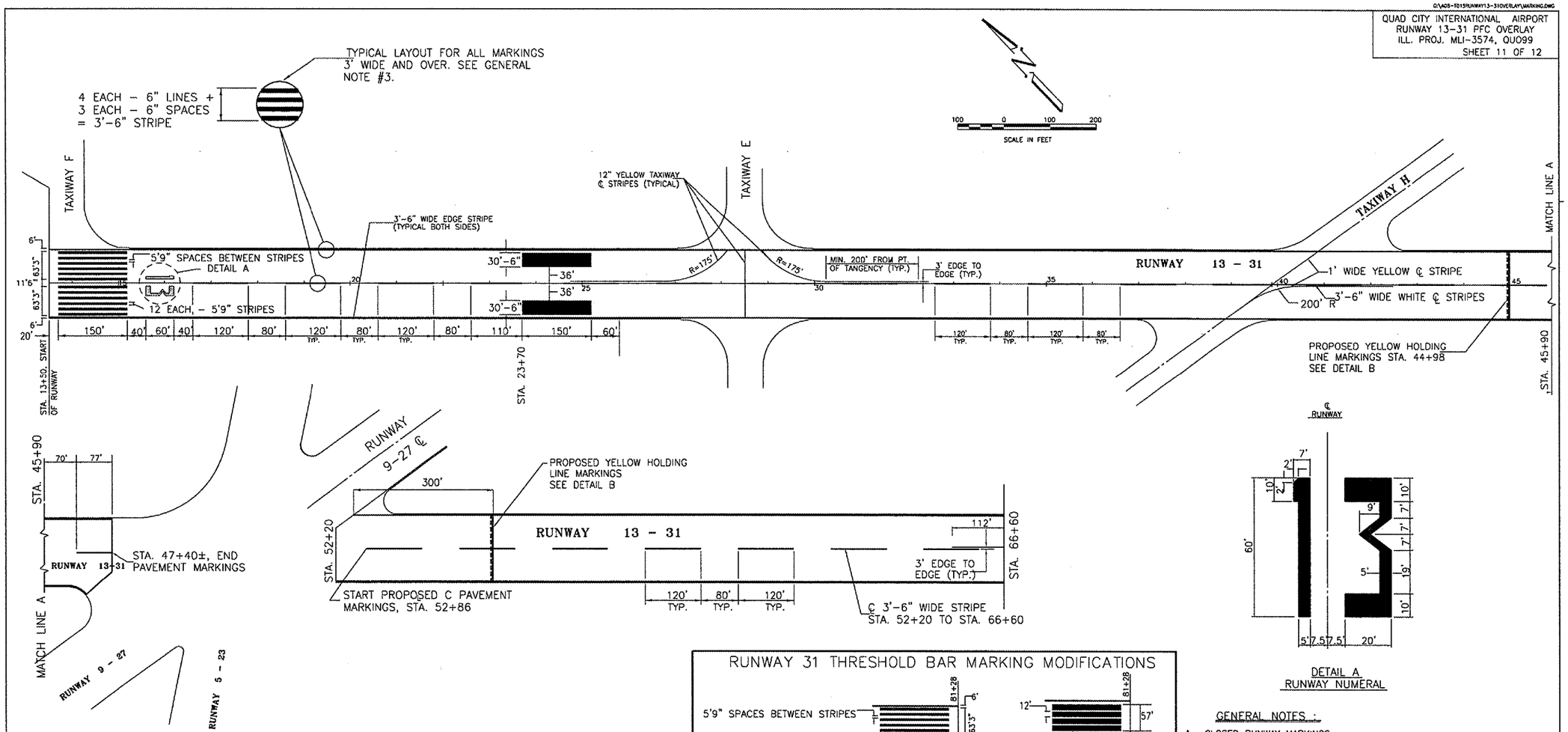

DETAIL A
RUNWAY NUMERAL

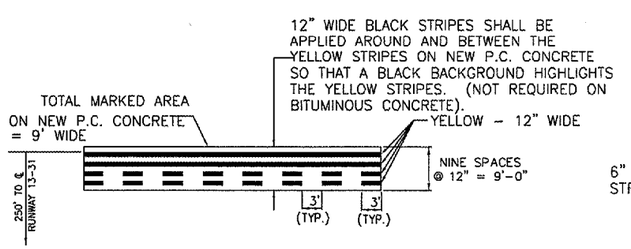

DETAIL B
RUNWAY HOLDING LINE MARKINGS

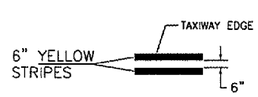

DETAIL C
TAXIWAY EDGE STRIPES

RUNWAY 31 THRESHOLD BAR MARKING MODIFICATIONS

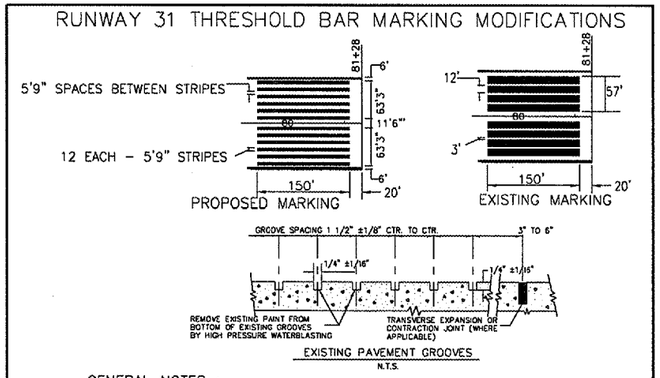

GENERAL NOTES :

1. REMOVE EIGHT(8) EXISTING THRESHOLD BARS (150'X12') INCLUDING PAINT IN THE EXISTING GROOVES.
2. REPLACE MARKING AS SHOWN IN PROPOSED MARKING DETAIL ABOVE.
3. COMPLETE ALL WORK IN TIME TO REOPEN RUNWAY 31 WHEN STAGE 5 IS COMPLETE.

GENERAL NOTES :

A. CLOSED RUNWAY MARKINGS
1. CROSS FOR CLOSED RUNWAY IS REQUIRED AT EACH END OF THE RUNWAY AND SHALL BE PLACED DIRECTLY OVER RUNWAY IDENTIFICATION NUMERALS. SEE DETAIL D.
2. COLOR OF ALL CROSSES SHALL BE AVIATION YELLOW

B. PAVEMENT MARKINGS
1. ALL RUNWAY MARKINGS SHALL BE WHITE UNLESS NOTED OTHERWISE.
2. ALL TAXIWAY MARKINGS SHALL BE YELLOW.
3. RUNWAY MARKINGS 3' FEET WIDE AND OVER SHALL CONSIST OF A SERIES OF LONGITUDINAL STRIPES 6" WIDE WITH EQUAL WIDTH SPACES BETWEEN THE STRIPES (STRIATED MARKINGS). THE NORTHERLY MOST OUTSIDE STRIPE ON THE THRESHOLD MARKINGS SHALL BE 9" WIDTH.
4. ALL MARKINGS SHALL HAVE A REFLECTIVE MEDIA APPLIED IN ACCORDANCE WITH THE SPECIFICATIONS.
5. TAXIWAY AND RUNWAY MARKINGS DAMAGED BY CONSTRUCTION OF THE PROJECT SHALL BE REPLACED BY THE CONTRACTOR AT HIS EXPENSE.
6. PROPOSED TAXIWAY MARKINGS TO MATCH EXISTING TAXIWAY MARKINGS.
7. TWO APPLICATIONS OF PAINT SHALL BE SPRAYED. SEE SPECIAL PROVISIONS FOR APPLICATION RATES.