KEY MAP

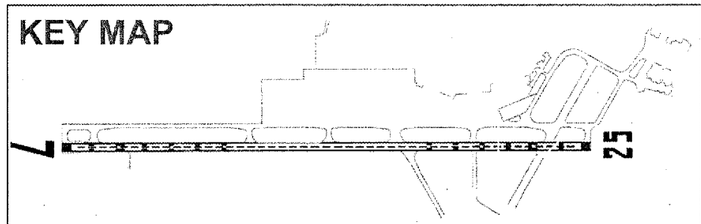

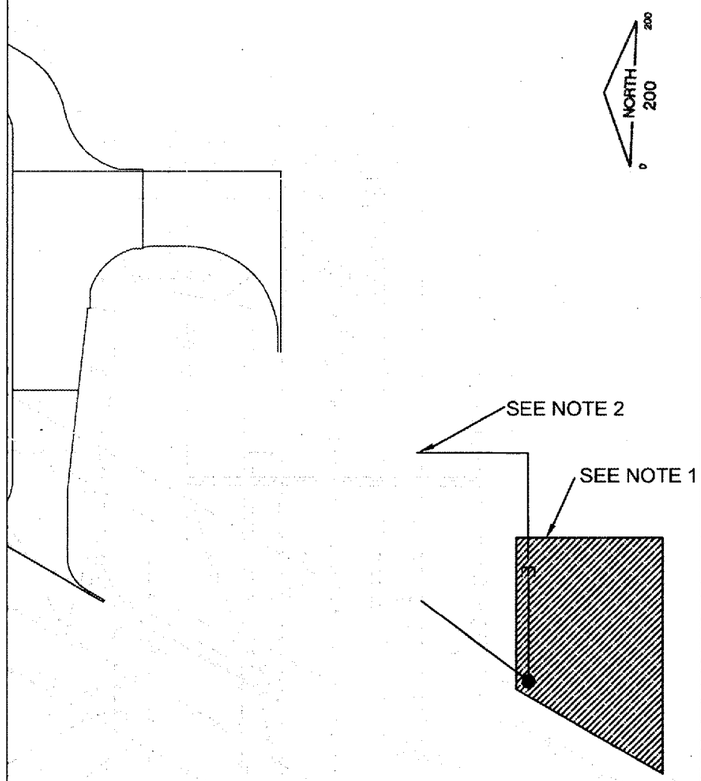

KEY MAP

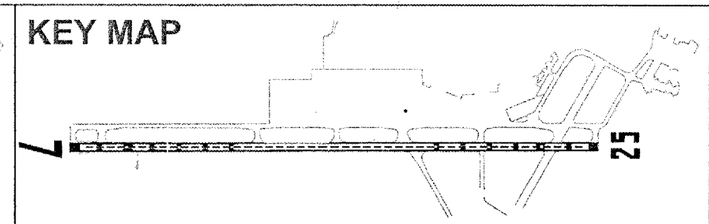

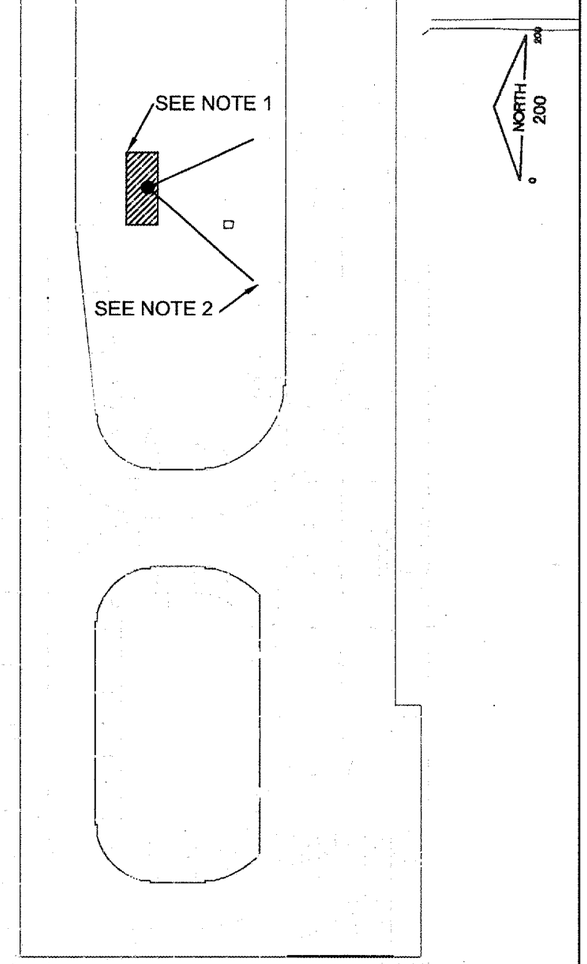

NOTES:
ALL CONNECTIONS TO GROUND RODS SHALL BE MADE WITH ONE-SHOT EXOTHERMIC TYPE CONNECTORS CALDWELD OR EQUAL.

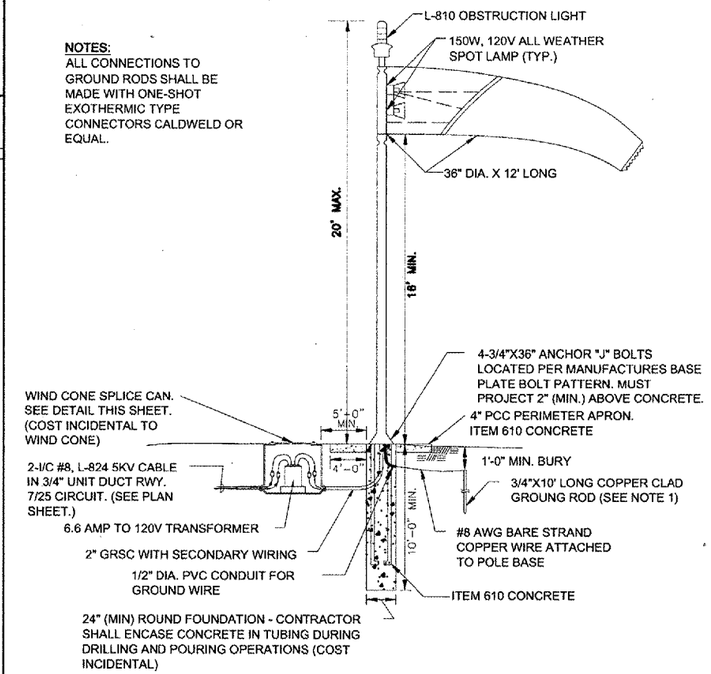

INTERNALLY LIGHTED WIND CONE AND BASE DETAIL
NOT TO SCALE

NOTES:

1. NEW INTERNALLY LIT WINDCONE, EXACT LOCATION TO BE DETERMINED BY RESIDENT ENGINEER
2. CONNECTION TO EXISTING RUNWAY CIRCUIT SHALL BE CONSIDERED INCIDENTAL TO ITEM AR107812
3. THE WORK CONSISTS OF CONSTRUCTING A WINCONE AT THE LOCATIONS SHOWN AND INSTALLING THE NECESSARY ELECTRICAL CABLING AND ENCLOSURES AS WELL AS OTHER MISCELLANEOUS CONSTRUCTION TO INCLUDE ALL INCIDENTAL AND COLLATERAL WORK NECESSARY TO COMPLETE THE ITEM.

ELECTRICAL PLAN - 2

RO013

CMT
CRAWFORD, MURPHY & TILLY, INC.
CONSULTING ENGINEERS
Copyright CMT, Inc.

Chicago / Rockford International Airport

Rockford, Illinois

Greater Rockford Airport Authority

AIP: 3-17-0088-XX
RFD-3617

Rehab. Txy B (Phase 2)

Revisions

No.	Date	Description

0 — 1
THIS BAR IS EQUAL TO 1" AT FULL SCALE (17 X 11).

DESIGN BY:	CMT- ARR
DRAWN BY:	CMT- ARR
CHECKED BY:	CMT- ARR
APPROVED BY:	JGP
DATE:	6.9.2006
JOB No:	05258-08-00

ELECTRICAL PLAN 2 (ELP2)

16

SHEET 16 OF 19 SHEETS