STATE OF ILLINOIS
DEPARTMENT OF TRANSPORTATION

F.A.I. RTE.	SECTION	COUNTY	TOTAL SHEETS	SHEET NO.
90/94	*	COOK	556	370
STA.		TO STA.		
FED. ROAD DIST. NO. 1	ILLINOIS	FED. AID PROJECT		

* (1818, ETC, 2324.6-1P)R-8

62300

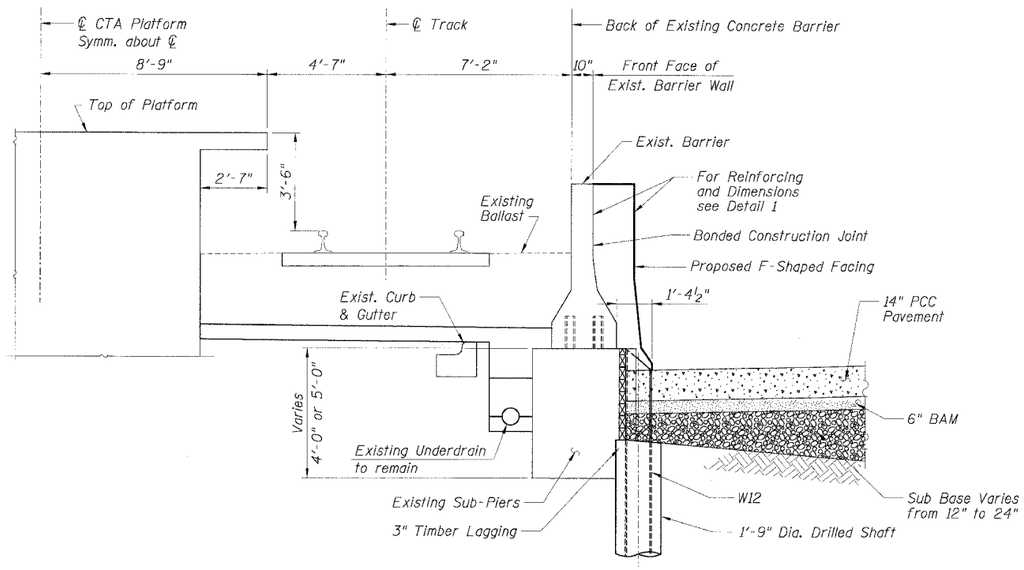

TYPICAL SECTION
BETWEEN SUB-PIERS

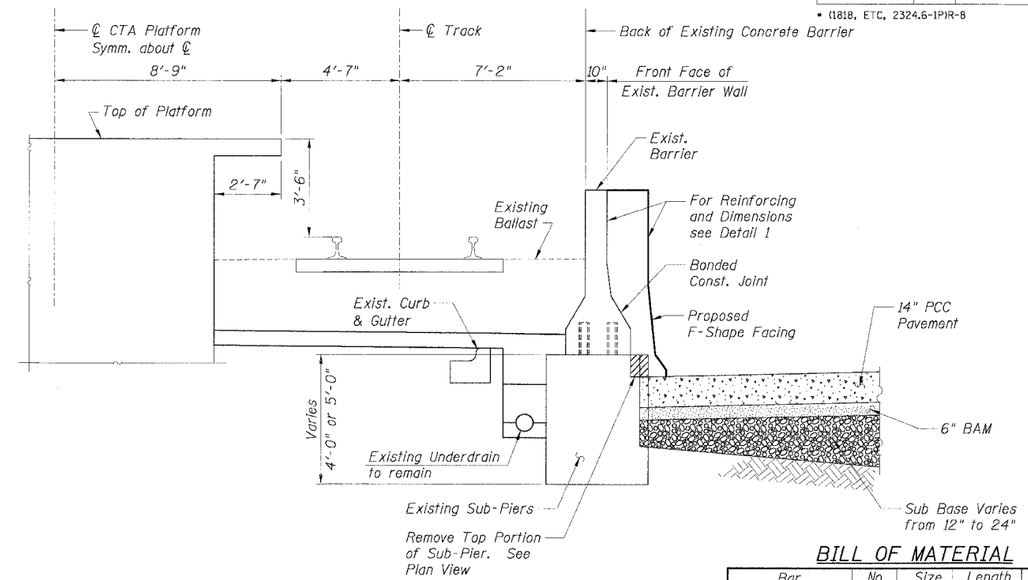

TYPICAL SECTION
AT SUB-PIER

BILL OF MATERIAL

Bar	No.	Size	Length	Shape
d1(E)		#4	5'-4"	
d2(E)		#4	3'-6"	
h1(E)		#4		
h2(E)		#4	2'-4"	

Item	Unit	Quantity
Furnishing Soldier Piles, W12x__	Foot	
Drilling and Setting Soldier Piles (in Soil)	Cu. Ft.	
Untreated Timber Lagging	Sq. Ft.	
Concrete Removal	Cu. Yd.	
Reinforcement Bars, Epoxy Coated	Lbs.	
Concrete Structures	Cu. Yd.	
Protective Coat	Sq. Yd.	

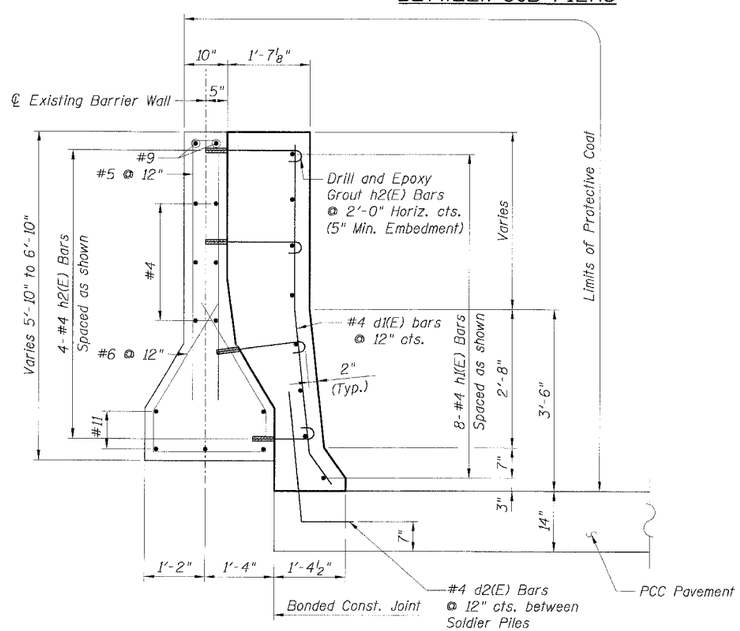

DETAIL 1

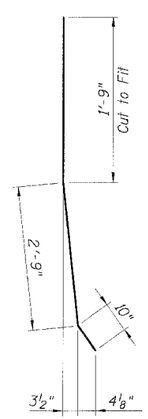

d1(E) Bar

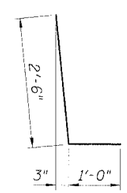

d2(E) Bar

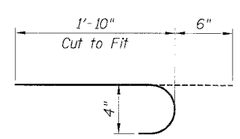

h2(E) Bar

LEGEND:

- Concrete Removal
- PCC Pavement
- BAM
- Sub Base
- Earth

NOTES:

1. Drilling and grouting of #4 h2(E) bars shall be in accordance with Section 584 of the Standard Specifications.
2. #4 d2(E) bars shall be seated in their final position prior to the placement of the concrete shoulder. Bars shall not be mucked into place.
3. The cost of drilling holes, furnishing and placing Epoxy Grout and setting #4 h2(E) bars shall be included in the cost per cubic yard for Concrete Structures.
4. Provide joints in facing to match those in the existing barrier.

Sheet B2 of 16

REVISIONS	
NAME	DATE

ILLINOIS DEPARTMENT OF TRANSPORTATION
F.A.I. 90/94 (DAN RYAN EXPRESSWAY)

EXISTING BARRIER WALL MODIFICATIONS AT CTA STATIONS
PROPOSED T/SHOULDER BELOW EXISTING TYPICAL SECTIONS & DETAILS

SCALE: None — DRAWN BY: KWT
DATE: JULY 7, 2005 — CHECKED BY: RDP

CTE | AECOM
CTE
303 East Wacker Drive, Suite 600, Chicago, Illinois 60601-5216
T 312.938.7300 F 312.938.7309 www.cte.aecom.com

p:\P40468\Struct\E&K_Dwgs\Str_B2300D3_CTA-Barrier-RT09E022A-CT.dgn
06/24/2005 02:38:41 PM