STATE OF ILLINOIS
DEPARTMENT OF TRANSPORTATION

ROUTE NO.	SECTION	COUNTY	TOTAL SHEETS	SHEET NO.
FAI 90/94	*	COOK	93	19
FED.ROAD DIST.NO.		ILLINOIS	PROJECT	

Sheet No 4 of 8 Sheets

* 2005-008F
CONTRACT #62919

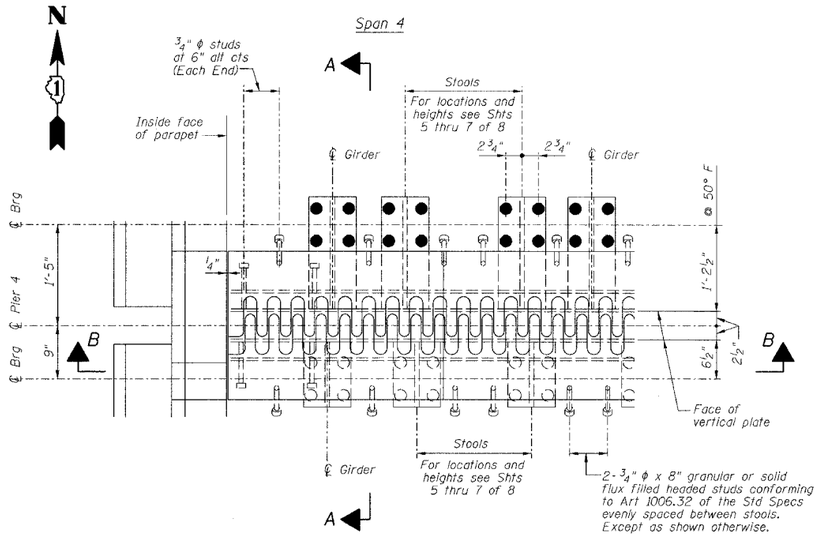

PLAN

(Showing Southbound-Northbound similar)

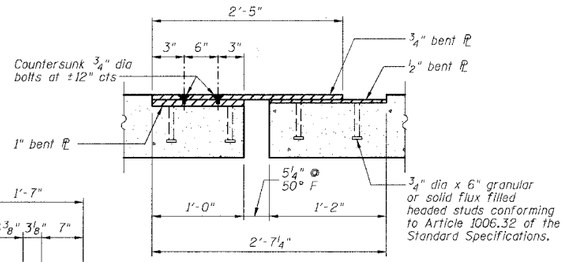

SECTION C-C

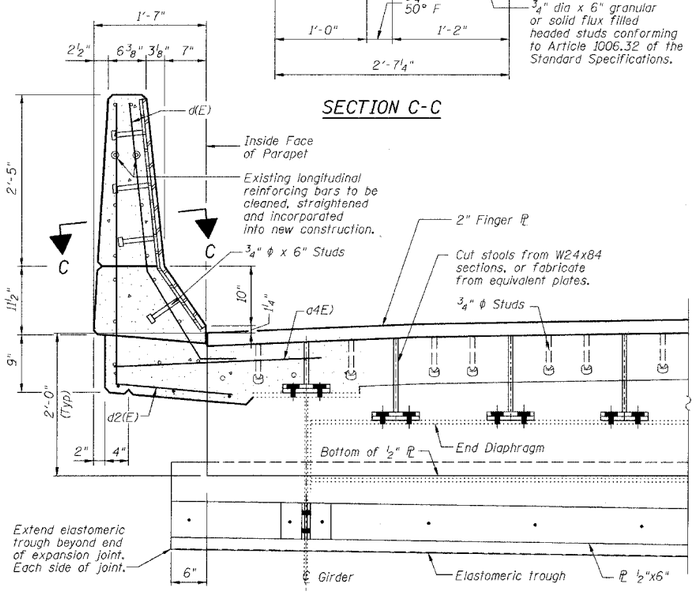

SECTION B-B

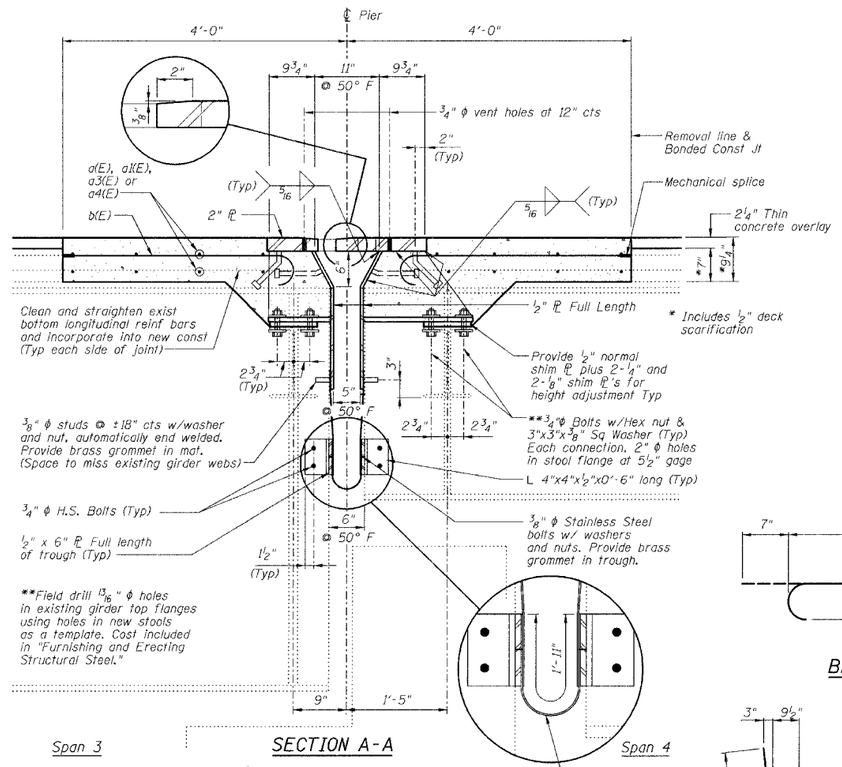

SECTION A-A

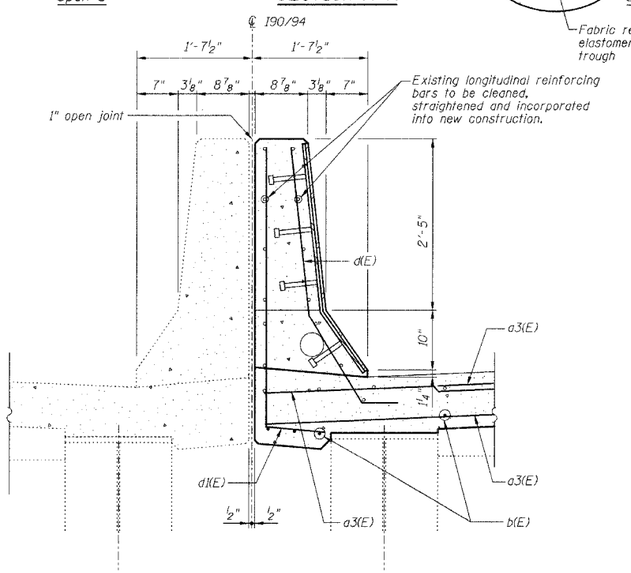

DETAIL AT MEDIAN PARAPET

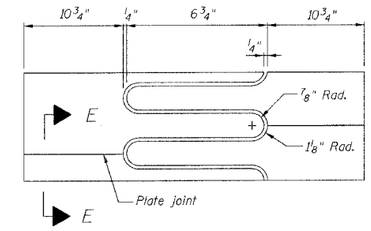

FLAME CUTTING DIAGRAM

(Proposed Finger ℙ - Cut from 2" x 2'-4½" ℙ)

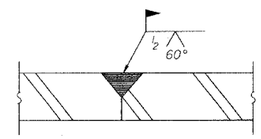

SECTION E-E

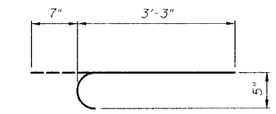

BAR b(E)

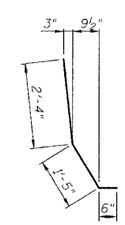

BAR d(E)

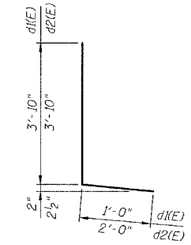

BARS d1(E) & d2(E)

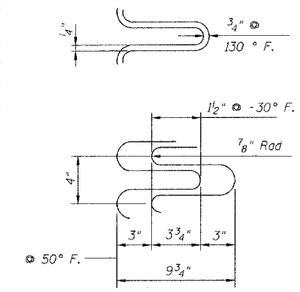

FINGER DETAIL

BILL OF MATERIAL

Bar	No.	Size	Length	Shape
a(E)	28	#5	30'-9"	
a1(E)	30	#5	21'-0"	
a3(E)	24	#5	31'-0"	
a4(E)	16	#6	4'-6"	
b(E)	180	#5	3'-10"	
d(E)	16	#5	4'-3"	
d1(E)	8	#5	4'-10"	
d2(E)	8	#5	5'-10"	
Reinforcement Bars, Epoxy Coated			Pound	3320
Concrete Removal			Cu Yd	26.7
Concrete Superstructure			Cu Yd	23.0
Bar Splicers			Each	24
Mechanical Splice			Each	180

Reinforcing bars designated (E) shall be epoxy coated.

Bars indicated thus 1x2-#5 etc indicates 1 line of bars with 2 lengths per line.

NOTES

1. The Contractor shall bolt the Stools of the Fingerplate Joint Assembly to the top of existing End Cross Frames and to the top of the existing girders, as shown in Section A-A of this drawing.
2. Stainless steel bolts, washers and nuts shall meet the requirements of ASTM A193.
3. The furnishing of all necessary hardware, stainless steel bolts, studs and washers, plates and angles shall be included with "Furnishing Structural Steel".
4. Expansion Length = 348.5'

PIER NO. 4

FINGER PLATE EXPANSION JOINT DETAILS

REVISIONS		
No.	DATE	INITIALS
1		
2		
3		
4		
5		
6		
7		
8		
9		
10		

STATE OF ILLINOIS
DEPARTMENT OF TRANSPORTATION
DIVISION OF HIGHWAYS

FAI RTE 90/94 DAN RYAN EXPRESSWAY
SN 016-1110 (NORTHBOUND)
SEC COOK COUNTY

HOMER L. CHASTAIN & ASSOCIATES
CONSULTING ENGINEERS
8609 W. BRYN MAWR AVENUE
SUITE 204
CHICAGO, ILLINOIS 60631
312-714-0560
FAX 312-714-0055

DRAWN BY	DATE
RLK	5/03
CHECKED BY	DATE
SDS	5/03

BOOK NUMBER

PROJECT No. 4222-3

SHEET No.