| F.A.P. ROUTE | COUNTY SECTION 99-00243-00-PV | COUNTY | TOTAL SHTS. | SHEET NO. |
|---|---|---|---|---|
| 336 | CONTRACT NO. 83782 | KANE | 268 | 162 |
| SPECIAL DETAILS | | | | |
| F.H.W.A. REG.5 | ILLINOIS | PROJECT F-0336(008) | | |

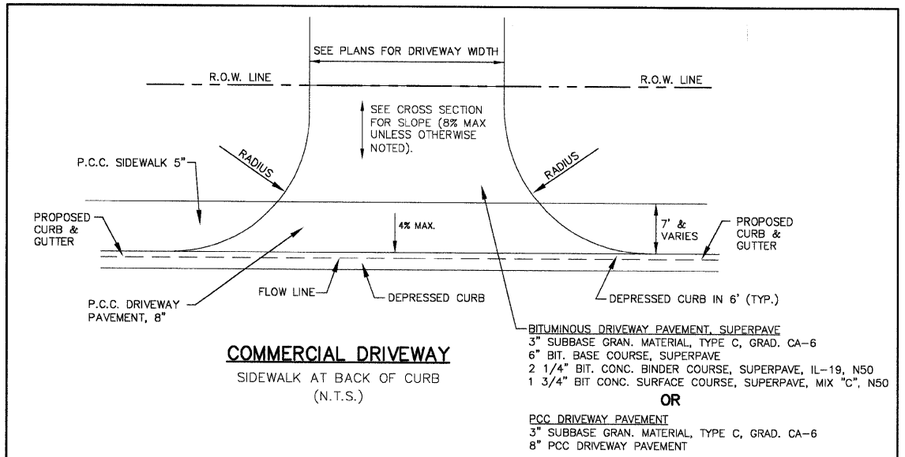


BITUMINOUS DRIVEWAY PAVEMENT, SUPERPAVE
3" SUBBASE GRAN. MATERIAL, TYPE C, GRAD. CA-6
6" BIT. BASE COURSE, SUPERPAVE
2 1/4" BIT. CONC. BINDER COURSE, SUPERPAVE, IL-19, N50
1 3/4" BIT CONC. SURFACE COURSE, SUPERPAVE, MIX "C", N50

**OR**

PCC DRIVEWAY PAVEMENT
3" SUBBASE GRAN. MATERIAL, TYPE C, GRAD. CA-6
8" PCC DRIVEWAY PAVEMENT

## COMMERCIAL DRIVEWAY

SIDEWALK AT BACK OF CURB

(N.T.S.)

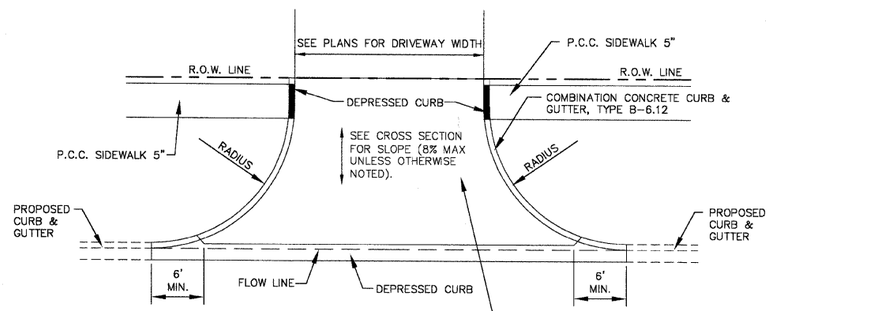


BITUMINOUS DRIVEWAY PAVEMENT, SUPERPAVE
3" SUBBASE GRAN. MATERIAL, TYPE C, GRAD. CA-6
6" BIT. BASE COURSE, SUPERPAVE
2 1/4" BIT. CONC. BINDER COURSE, SUPERPAVE, IL-19, N50
1 3/4" BIT CONC. SURFACE COURSE, SUPERPAVE, MIX "C", N50

**OR**

PCC DRIVEWAY PAVEMENT
3" SUBBASE GRAN. MATERIAL, TYPE C, GRAD. CA-6
8" PCC DRIVEWAY PAVEMENT

## COMMERCIAL DRIVEWAY

(N.T.S.)

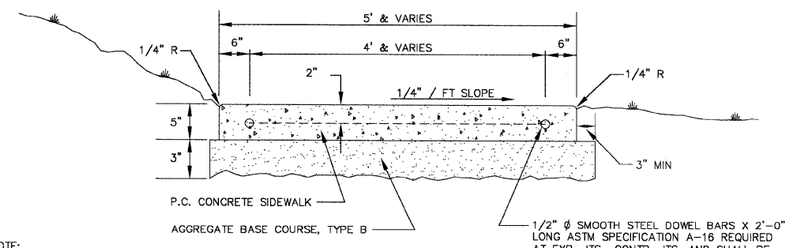


NOTE:
AT ALL LOCATIONS WHERE THE SIDEWALK ABUTTS CURB & GUTTER SECTIONS, THE SIDEWALK SHALL BE POURED FULL CURB & GUTTER DEPTH FOR A MINIMUM 12" WIDTH.

THE CONTRACT UNIT PRICE FOR P.C. CONC. SIDEWALK, 5" SHALL INCLUDE THE DOWEL BARS, EXPANSION AND CONTRACTION JOINTS, DUMMY JOINTS ANC BASE MATERIAL AS SPECIFIED.

TYPICAL SECTION
SIDEWALK DETAIL

## P.C. CONCRETE SIDEWALKS

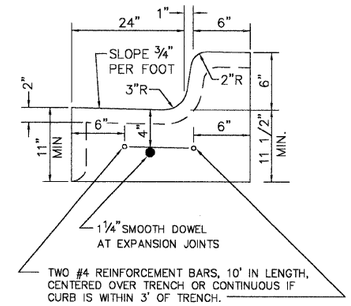


TWO #4 REINFORCEMENT BARS, 10' IN LENGTH, CENTERED OVER TRENCH OR CONTINUOUS IF CURB IS WITHIN 3' OF TRENCH.

DEPTH OF SAWED CONTRACTION JOINT = 2"

CONTRACTION JOINTS SHALL BE 10' C/C

## SAWED CONTRACTION JOINT DETAIL

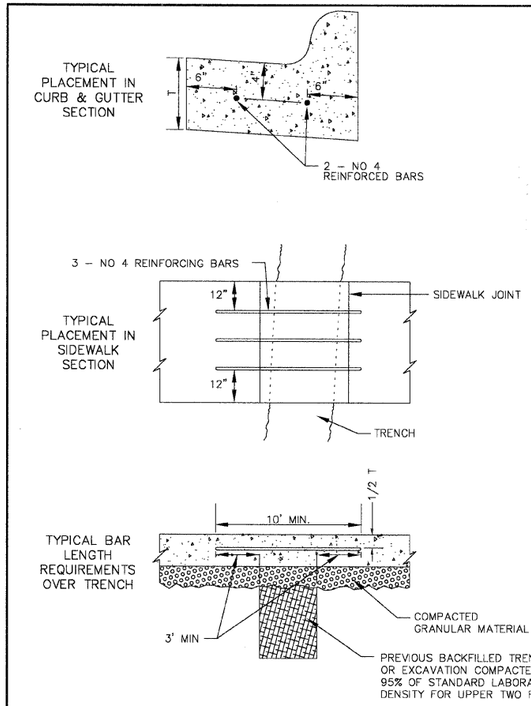


## REINFORCING CURB & GUTTER OR SIDEWALK INSTALLED OVER TRENCH

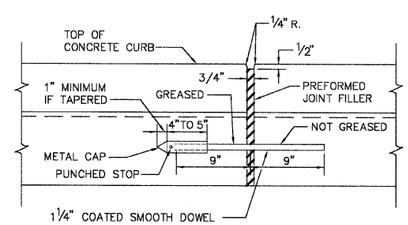


## CURB EXPANSION JOINT DETAIL

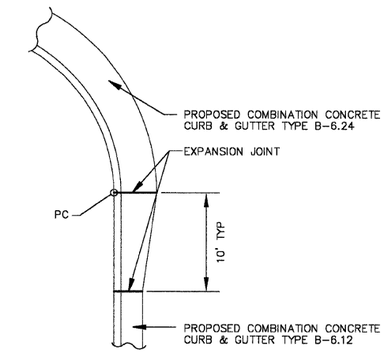


## CURB AND GUTTER TRANSITION DETAIL

(N.T.S.)

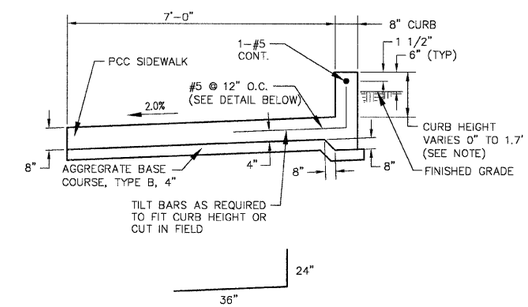


NOTE: TAPER CURB HEIGHT FROM 0" TO 1.7' WITHIN 8.5' TRANSITION (5:1 SLOPE)

## PORTLAND CEMENT CONCRETE SIDEWALK, 8 INCH SPECIAL DETAIL

(N.T.S.)