Contract No. 97255

ROUTE NO.	SECTION	COUNTY	TOTAL SHEETS	SHEET NO.
F.A.U.8966	SEC. 97-00208-01-GS	MADISON	34	13
FED. ROAD DIST. NO. 7	ILLINOIS	PROJECT		

Sheet 3 of 18

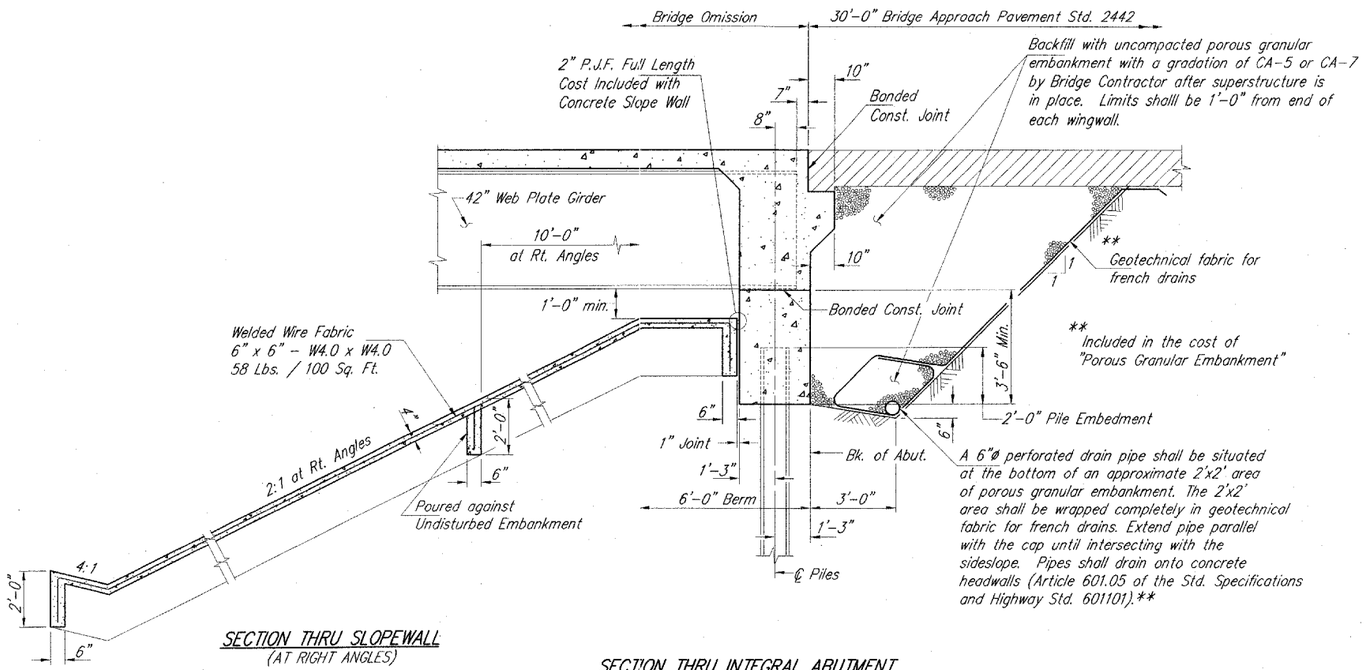

SECTION THRU SLOPEWALL
(AT RIGHT ANGLES)

SECTION THRU INTEGRAL ABUTMENT
(AT RIGHT ANGLES)

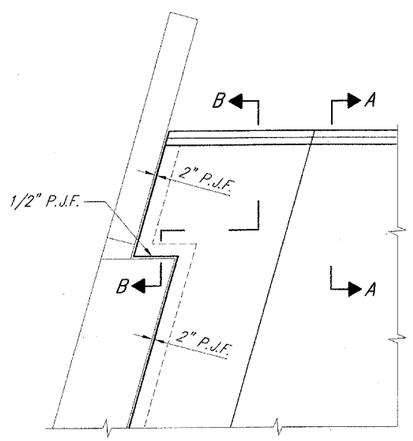

PARTIAL PLAN OF SLOPEWALL

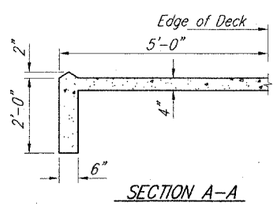

SECTION A-A

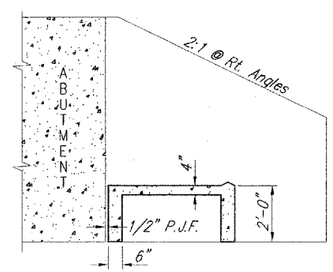

SECTION B-B

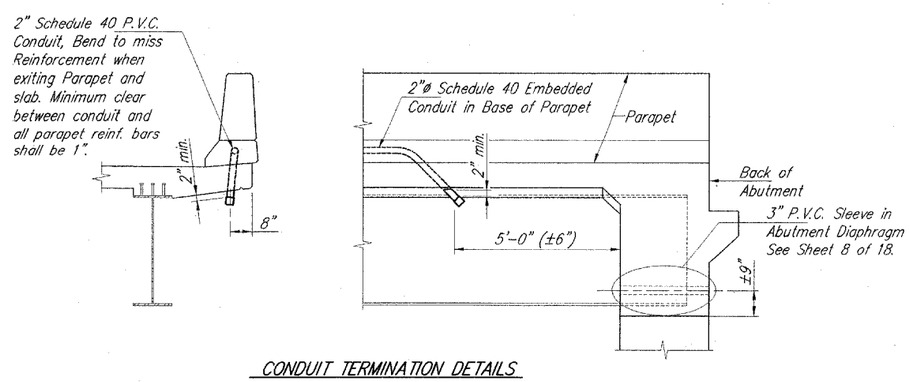

CONDUIT TERMINATION DETAILS
(West Parapet Only)

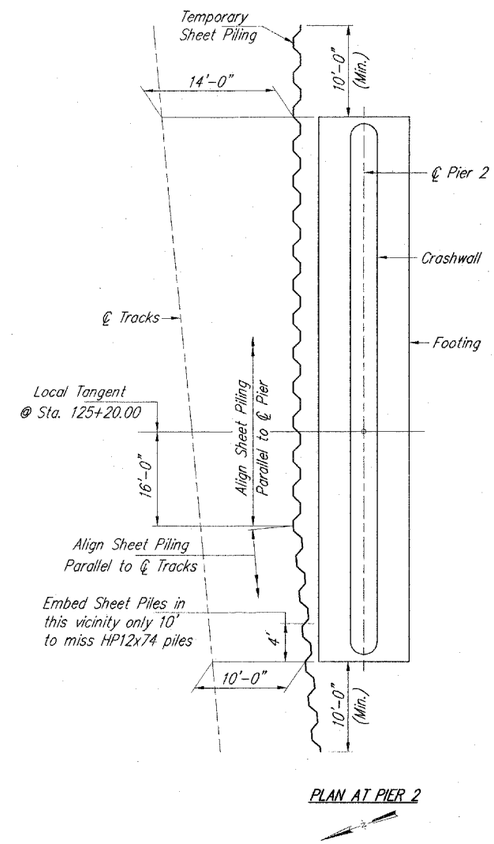

PLAN AT PIER 2

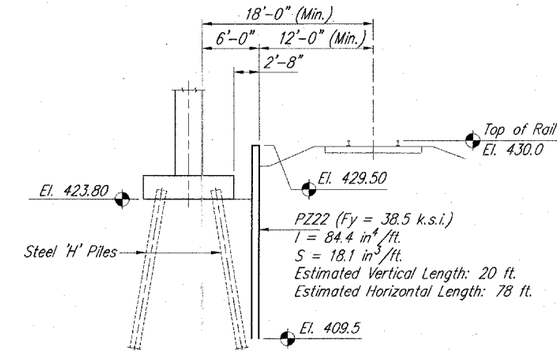

SECTION AT PIER 1
(Looking East)

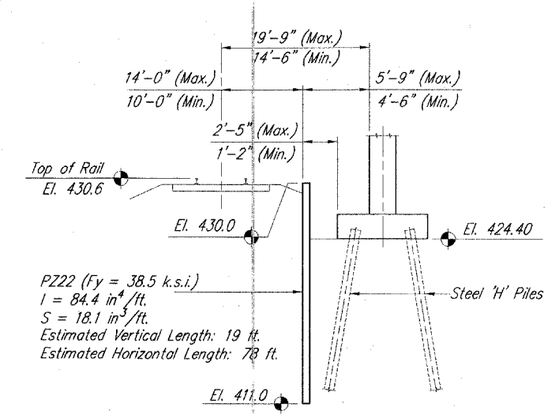

SECTION AT PIER 2
(Looking East)

TEMPORARY SHEET PILING DETAILS

Notes:

1. The Contractor shall provide saftey railings atop the temporary sheet piling. Cost to be included with Temporary Sheet Piling, See Special Provisions.
2. If the Contractor chooses to alter the temporary cantilevered sheet piling design requirements shown on the plans, a full design submittal including plan details and calculations will be required for review and acceptance by the Engineer.

Corporate License Number 184-001-084

SLOPEWALL & TEMPORARY SHEET PILING DETAILS
INDIANA AVENUE over NORFOLK SOUTHERN RAILWA
SEC. 97-00208-01-GS
STATION 125+20.00
ALTON, ILLINOIS
STR. NO. 060-6110

©Copyright Hanson Professional Services Inc. 2005

HANSON
Hanson Professional Services Inc.

JOB NO. 95S100
DATE 05/12/0

LAYOUT	T.E.H.	10/16/96
DRAWN	R.K.D.	7/28/98
RECEIVED	T.E.H.	5/31/05

I:\95JOBS\95S100B\BRIDGE 05-12-05\03-SWALL.DWG MAY 13, 2005 7:32AM DAB