STORM WATER POLLUTION PREVENTION PLAN

THE FOLLOWING PLAN IS ESTABLISHED AND INCORPORATED IN THE PROJECT TO DIRECT THE CONTRACTOR IN THE PLACEMENT OF TEMPORARY EROSION CONTROL SYSTEMS AND TO PROVIDE A STORM WATER POLLUTION PREVENTION PLAN FOR COMPLIANCE WITH NPDES.

THE PURPOSE OF THIS PLAN IS TO MINIMIZE EROSION WITHIN THE CONSTRUCTION SITE AND TO LIMIT SEDIMENTS FROM LEAVING THE SITE BY UTILIZING PROPER TEMPORARY EROSION CONTROL SYSTEMS AND PROVIDING GROUND COVER WITHIN A REASONABLE AMOUNT OF TIME.

CERTAIN EROSION CONTROL FACILITIES SHALL BE INSTALLED BY THE CONTRACTOR AT THE BEGINNING OF CONSTRUCTION. OTHER ITEMS SHALL BE INSTALLED BY THE CONTRACTOR AS DIRECTED BY THE ENGINEER ON A CASE BY CASE SITUATION DEPENDING ON THE CONTRACTOR'S SEQUENCE OF ACTIVITIES, TIME OF YEAR, AND EXPECTED WEATHER CONDITIONS.

THE CONTRACTOR SHALL INSTALL PERMANENT EROSION CONTROL SYSTEMS AND SEEDING WITHIN A TIMEFRAME SPECIFIED HEREIN AND AS DIRECTED BY THE ENGINEER, THEREFORE MINIMIZING THE AMOUNT OF AREA SUSCEPTIBLE TO EROSION AND REDUCING THE AMOUNT OF TEMPORARY SEEDING, WHICH WILL BE THE CONTRACTOR'S COST. THE ENGINEER WILL DETERMINE IF ANY TEMPORARY EROSION CONTROL SYSTEMS SHOWN IN THE PLAN CAN BE DELETED AND IF ANY ADDITIONAL TEMPORARY EROSION CONTROL SYSTEMS, WHICH ARE NOT INCLUDED IN THIS PLAN, SHALL BE ADDED. THE CONTRACTOR SHALL PERFORM ALL WORK AS DIRECTED BY THE ENGINEER AND AS SHOWN ON THE PLANS.

SITE DESCRIPTION

THE FOLLOWING IS A DESCRIPTION OF THE CONSTRUCTION ACTIVITY WHICH IS THE SUBJECT OF THIS PLAN:

THIS PROJECT CONSISTS EXPANDING THE NORTHWEST AIR CARGO APRON AT THE GREATER ROCKFORD AIRPORT. THE PROJECT INCLUDES PAVEMENT REMOVAL, EXCAVATION, EMBANKMENT, VARIOUS PAVEMENT ITEMS AND OTHER MISCELLANEOUS CONSTRUCTION WORK.

THE FOLLOWING IS A DESCRIPTION OF THE INTENDED SEQUENCE OF MAJOR ACTIVITIES WHICH WILL DISTURB SOILS FOR MAJOR PORTIONS OF THE CONSTRUCTION SITE, SUCH AS GRUBBING, EXCAVATION AND GRADING:

1. TEMPORARY FENCING INSTALLATION.
2. PLACEMENT, MAINTENANCE, REMOVAL AND PROPER CLEAN-UP OF TEMPORARY EROSION CONTROL, SUCH AS PERIMETER SILT FENCE, TEMPORARY DITCH CHECKS AND INLET PROTECTION.
3. EXCAVATION AND EMBANKMENT WILL BE COMPLETED WITHIN THE PROJECT LIMITS.
4. PAVEMENT CONSTRUCTION.
5. FINAL GRADING AND OTHER MISCELLANEOUS ITEMS.
6. PLACEMENT OF PERMANENT EROSION CONTROL, SUCH AS SEEDING AND MULCHING.

AREA OF CONSTRUCTION SITE

THE TOTAL AREA OF THE CONSTRUCTION SITE IS ESTIMATED TO BE 11.0 ACRES OF WHICH 11.0 ACRES WILL BE DISTURBED BY EXCAVATION, GRADING AND OTHER ACTIVITIES.

OTHER REPORTS, STUDIES AND PLANS WHICH AID IN THE DEVELOPMENT OF THE STORM WATER POLLUTION PREVENTION PLAN AS REFERENCED DOCUMENTS:

1. INFORMATION OF THE SOILS AND TERRAIN WITHIN THE SITE WAS OBTAINED FROM TOPOGRAPHIC SURVEYS AND SOIL BORINGS THAT WERE UTILIZED FOR THE DEVELOPMENT OF THE PROPOSED TEMPORARY EROSION CONTROL SYSTEMS.
2. PROJECT PLAN DOCUMENTS, SPECIFICATION AND SPECIAL PROVISIONS, AND PLAN DRAWINGS INDICATING DRAINAGE PATTERNS AND APPROXIMATE SLOPES ANTICIPATED AFTER GRADING ACTIVITIES WERE UTILIZED FOR THE PROPOSED PLACEMENT OF THE TEMPORARY EROSION CONTROL SYSTEMS.

DRAINAGE TRIBUTARIES AND SENSITIVE AREAS RECEIVING RUNOFF FROM THIS CONSTRUCTION SITE:

THE CONSTRUCTION SITE DRAINS INTO THE ROCK RIVER THROUGH A STORM SEWER SYSTEM.

CONTROLS--EROSION CONTROLS AND SEDIMENT CONTROL

DESCRIPTION OF STABILIZATION PRACTICES AT THE BEGINNING OF CONSTRUCTION

1. THE DRAWINGS, SPECIFICATIONS AND SPECIAL PROVISIONS WILL ENSURE THAT EXISTING VEGETATION IS PRESERVED WHERE ATTAINABLE AND DISTURBED PORTIONS OF THE SITE WILL BE STABILIZED. STABILIZATION PRACTICES INCLUDE SEEDING AND MULCHING AS DIRECTED BY THE ENGINEER. STABILIZATION MEASURES SHALL BE INITIATED AS SOON AS POSSIBLE IN PORTIONS OF THE SITE WHERE CONSTRUCTION ACTIVITIES HAVE TEMPORARILY OR PERMANENTLY CEASED, BUT IN NO CASE MORE THAN 7 DAYS AFTER THE CONSTRUCTION ACTIVITY IN THAT PORTION OF THE SITE HAS TEMPORARILY OR PERMANENTLY CEASED.

AS SOON AS REASONABLE ACCESS IS AVAILABLE TO ALL LOCATIONS WHERE WATER DRAINS AWAY FROM THE PROJECT, TEMPORARY DITCH CHECKS, INLET PROTECTION AND PERIMETER SILT FENCE SHALL BE INSTALLED AS CALLED OUT IN THE PLANS OR AS DIRECTED BY THE ENGINEER.

THIS PLAN HAS BEEN PREPARED TO COMPLY WITH THE PROVISIONS OF THE NPDES PERMIT NUMBER ILR10, ISSUED BY THE ILLINOIS ENVIRONMENTAL PROTECTION AGENCY FOR STORM WATER DISCHARGES FROM CONSTRUCTION SITE ACTIVITIES.

DESCRIPTION OF STABILIZATION PRACTICES DURING CONSTRUCTION:

DURING CONSTRUCTION, AREAS OUTSIDE THE CONSTRUCTION LIMITS AS OUTLINED PREVIOUSLY HEREIN SHALL BE PROTECTED. THE CONTRACTOR SHALL NOT USE THIS AREA FOR STAGING (EXCEPT AS DESCRIBED ON THE PLANS AND DIRECTED BY THE ENGINEER), PARKING OF VEHICLES OR CONSTRUCTION EQUIPMENT, STORAGE OF MATERIALS, OR OTHER CONSTRUCTION RELATED ACTIVITIES.

1. WITHIN THE CONSTRUCTION LIMITS, AREAS WHICH MAY BE SUSCEPTIBLE TO EROSION AS DETERMINED BY THE ENGINEER SHALL REMAIN UNDISTURBED UNTIL FULL SCALE CONSTRUCTION IS UNDERWAY TO PREVENT UNNECESSARY SOIL EROSION.
2. EARTH STOCKPILES SHALL BE TEMPORARILY SEEDED, AT THE CONTRACTORS EXPENSE, IF THEY ARE TO REMAIN UNUSED FOR MORE THAN FOURTEEN DAYS.
3. AS CONSTRUCTION PROCEEDS, THE CONTRACTOR SHALL INSTITUTE THE FOLLOWING AS DIRECTED BY THE ENGINEER:
   - A. PLACE TEMPORARY EROSION CONTROL FACILITIES AT LOCATIONS SHOWN ON THE PLANS.
   - B. CONSTRUCT DITCHES AND PROVIDE TEMPORARY EROSION CONTROL SYSTEMS.
   - C. BUILD NECESSARY EMBANKMENT AT CULVERT/STORM SEWER LOCATIONS AND THEN EXCAVATE AND PLACE PIPE.
   - D. EXCAVATED AREAS AND EMBANKMENT AREAS SHALL BE PERMANENTLY SEEDED IMMEDIATELY AFTER FINAL GRADING. IF NOT, THEY SHALL BE TEMPORARILY SEEDED, AT THE CONTRACTOR'S COST, IF NO CONSTRUCTION ACTIVITY IN THE AREA IS PLANNED FOR SEVEN DAYS.
4. CONSTRUCTION EQUIPMENT SHALL BE STORED AND FUELED ONLY AT DESIGNATED LOCATIONS. ALL NECESSARY MEASURES SHALL BE TAKEN TO CONTAIN ANY FUEL OR POLLUTANT IN ACCORDANCE WITH EPA WATER QUALITY REGULATIONS. LEAKING EQUIPMENT OR SUPPLIES SHALL BE IMMEDIATELY REPAIRED OR REMOVED FROM THE SITE.
5. THE RESIDENT ENGINEER SHALL INSPECT THE PROJECT DAILY DURING CONSTRUCTION ACTIVITIES. INSPECTION SHALL ALSO BE DONE WEEKLY AND AFTER RAINS OF 1/2 INCH OR GREATER OR EQUIVALENT SNOWFALL AND DURING WINTER SHUTDOWN PERIOD.
6. SEDIMENT COLLECTED DURING CONSTRUCTION OF THE VARIOUS TEMPORARY EROSION CONTROL SYSTEMS SHALL BE DISPOSED OF ON SITE ON A REGULAR BASIS AS DIRECTED BY THE ENGINEER. THE COST OF THIS MAINTENANCE SHALL BE INCLUDED IN THE UNIT BID PRICE FOR UNCLASSIFIED EXCAVATION AND EROSION CONTROL ITEMS.
7. THE TEMPORARY EROSION CONTROL SYSTEMS SHALL BE REMOVED AS DIRECTED BY THE ENGINEER AFTER USE IS NO LONGER NEEDED OR NO LONGER FUNCTIONING. THE COST OF THIS REMOVAL SHALL BE INCLUDED IN THE UNIT BID PRICE FOR VARIOUS TEMPORARY EROSION CONTROL PAY ITEMS.

DESCRIPTION OF STRUCTURAL PRACTICES AFTER FINAL GRADING:

TEMPORARY EROSION CONTROL SYSTEMS SHALL BE LEFT IN PLACE WITH PROPER MAINTENANCE UNTIL PERMANENT EROSION CONTROL IS IN PLACE AND WORKING PROPERLY AND ALL PROPOSED TURF AREAS ARE SEEDED AND ESTABLISHED.

ONCE PERMANENT EROSION CONTROL SYSTEMS AS PROPOSED IN THE PLANS ARE FUNCTIONAL AND ESTABLISHED, TEMPORARY ITEMS SHALL BE REMOVED, CLEANED UP, AND DISTURBED TURF RESEEDED.

MAINTENANCE AFTER CONSTRUCTION

CONSTRUCTION IS COMPLETE AFTER FINAL ACCEPTANCE BY THE ILLINOIS DIVISION OF AERONAUTICS. MAINTENANCE UP TO THIS DATE WILL BE REQUIRED BY THE CONTRACTOR.

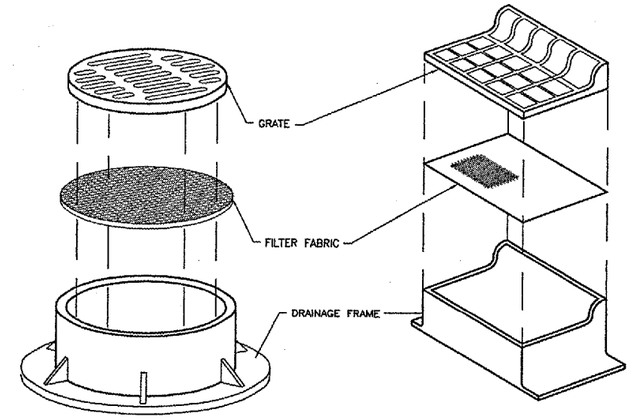

DRAINAGE STRUCTURE FILTER WRAP

N.T.S.

NOTES

1. FILTER WRAP TO BE PLACED IN ALL INLETS, MANHOLES, TRENCH DRAINS AND CATCH BASINS LOCATED IN PAVED AREAS AND NONPAVED AREAS.
2. FABRIC SHALL BE IN CONFORMANCE WITH MATERIALS SPECIFIED FOR SILT FENCE.
3. FABRIC SHALL OVERLAY FRAME BY 2" (MIN.).
4. CONTRACTOR SHALL CLEAR DEBRIS AND SILT AS REQUIRED FROM FABRIC TO MAINTAIN DRAINAGE THROUGH THE STRUCTURE.
5. FABRIC SHALL REMAIN IN PLACE UNTIL TURFED AREAS HAVE DEVELOPED A MIN. OF 80% OF COVERAGE.
6. COST OF FILTER WRAP SHALL BE CONSIDERED INCIDENTAL TO BALES.

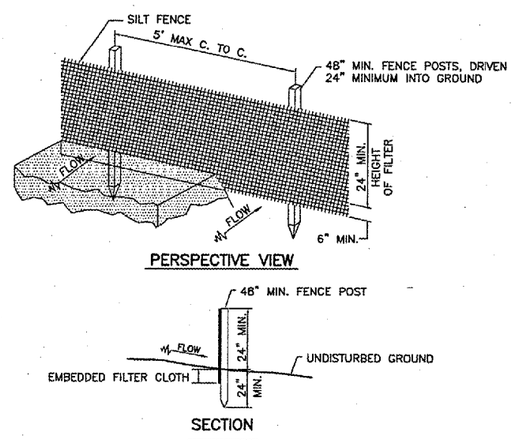

EROSION CONTROL FABRIC FENCE DETAIL

N.T.S.

CONSTRUCTION NOTES FOR SILT FENCE

1. WHEN TWO SECTIONS OF FILTER CLOTH ADJOIN EACH OTHER THEY SHALL BE OVER-LAPPED BY 6" MIN. AND FOLDED.
2. MAINTENANCE SHALL BE PERFORMED AS NEEDED AND MATERIAL REMOVED WHEN "BULGES" DEVELOP IN THE SILT FENCE. MAINTENANCE, WHICH INCLUDES THE REPLACEMENT OF DAMAGED FENCE, SHALL BE CONSIDERED INCIDENTAL TO THE COST OF THE EROSION CONTROL FENCE.
3. SILT FENCE SHALL BE INSTALLED PER STORMWATER POLLUTION PREVENTION PLAN OR AS DIRECTED BY THE ENGINEER.

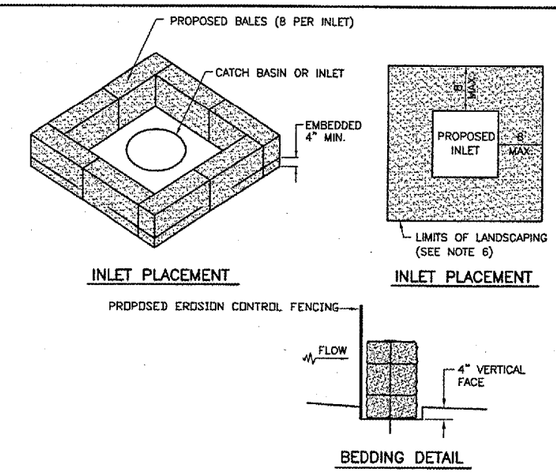

INLET PROTECTION - TURF AREAS

N.T.S.

NOTES

1. BALES SHALL BE PLACED AT THE TOE OF SLOPE OR ON A CONTOUR AND IN A ROW WITH ENDS TIGHTLY ABUTTING THE ADJACENT BALES.
2. EACH BALE SHALL BE EMBEDDED IN THE SOIL A MINIMUM OF 4 INCHES, AND PLACED SO THE BINDINGS ARE HORIZONTAL.
3. BALES SHALL BE SECURELY ANCHORED IN PLACE BY EITHER TWO STAKES OR REBARS DRIVEN THROUGH THE BALE. THE FIRST STAKE IN EACH BALE SHALL BE DRIVEN TOWARD THE PREVIOUSLY LAID BALE AT AN ANGLE TO FORCE THE BALES TOGETHER. STAKES SHALL BE DRIVEN FLUSH WITH THE BALE.
4. INSPECTION SHALL BE FREQUENT AND REPAIR / REPLACEMENT SHALL BE MADE PROMPTLY AS NEEDED.
5. BALES SHALL BE REMOVED WHEN THEY HAVE SERVED THEIR USEFULNESS SO AS NOT TO BLOCK OR IMPEDE STORM FLOW OR DRAINAGE. COST OF REMOVAL / REPLACEMENT TO BE INCLUDED IN UNIT PRICE FOR BALES.
6. AFTER FINAL APPROVAL OF THE ENGINEER, STRAW BALES MAY BE REMOVED. CONTRACTOR SHALL PLACE SEED AND MULCH OVER THE DISTURBED AREAS, COST INCIDENTAL TO BALES.

R0011

CMT
CRAWFORD, MURPHY & TILLY, INC.
CONSULTING ENGINEERS
© Copyright CMT, Inc.

Northwest Chicagoland International Airport

Rockford, Illinois

Greater Rockford Airport Authority

AIP: 3-17-0088-XX
RFD-3507

NW Air Cargo Sitework (Phase 2)

Revisions

No.	Date	Description

0 1
THIS BAR IS EQUAL TO 1" AT FULL SCALE (17 X 11).

DESIGN BY:	DLP
DRAWN BY:	CMT
CHECKED BY:	DLP
APPROVED BY:	DLP
DATE:	6.10.2005
JOB No:	05258-06-00

EROSION CONTROL DETAILS

9 (ERD1)