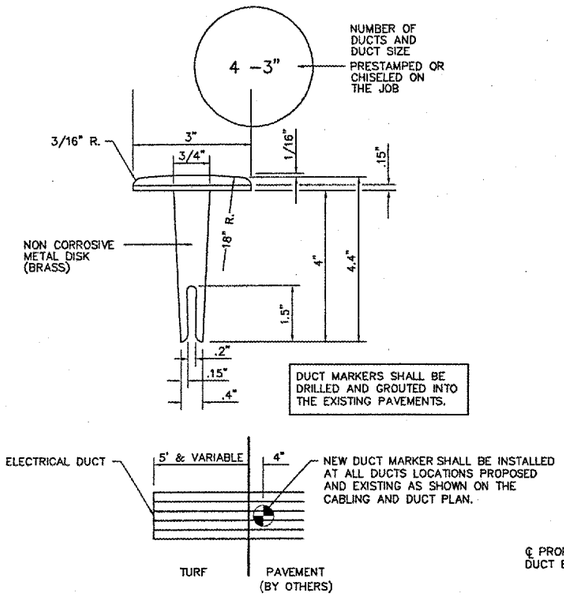

DUCT MARKER DETAIL

NOT TO SCALE

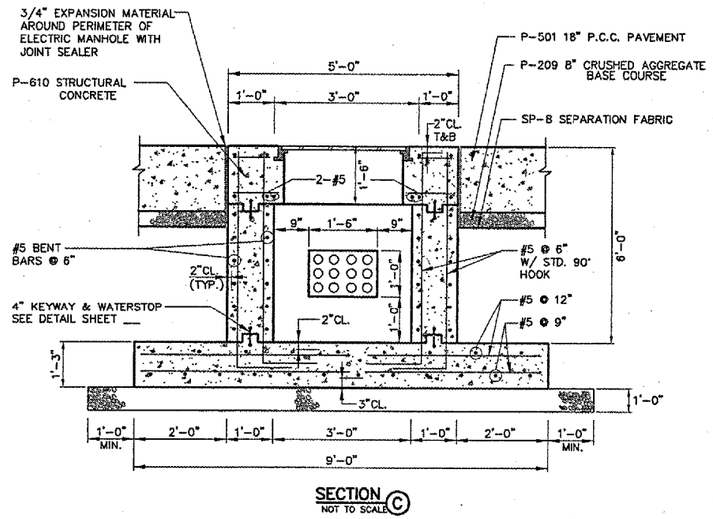

SECTION Ⓒ

NOT TO SCALE

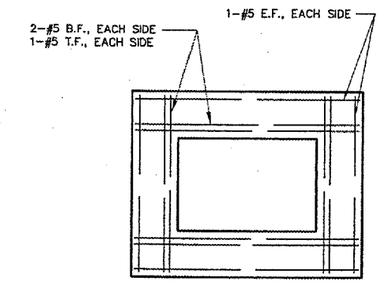

TOP SLAB PLAN SHOWING REINFORCEMENT

NOT TO SCALE

NOTES

1. CONTRACTOR SHALL PROVIDE CABLE RACKS AND PULL BARS.
2. SEE "ADDITIONAL REINFORCEMENT AROUND DUCT OPENINGS" DETAIL, SHEET___ FOR ADDITIONAL INFORMATION.

PROPOSED TYPE 1 HANDHOLE

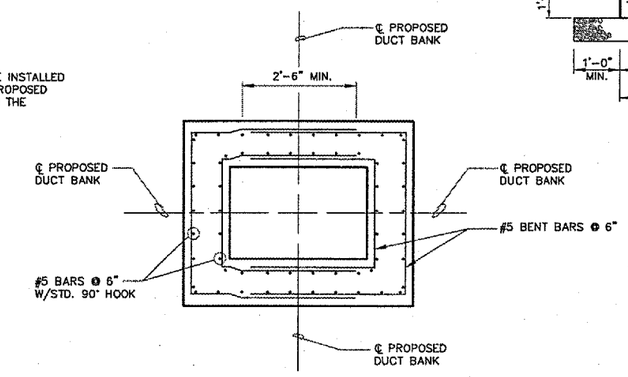

WALL REINFORCEMENT PLAN

NOT TO SCALE

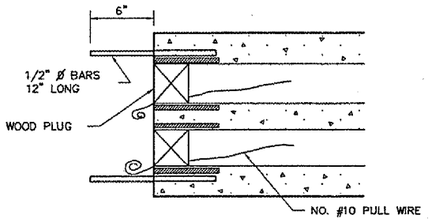

TYPICAL SECTION

NOTES

A. DIMENSIONS SHOWN ARE MINIMUM
B. TOP OF CONCRETE ENCASEMENT TO BE NOT LESS THAN 18" BELOW FINISHED SUBGRADE
C. DUCT CONCRETE SHALL BE ITEM 610 STRUCTURAL P.C. CONCRETE
D. ALL DUCT SHALL BE 3" INSIDE DIA.
E. CABLE MARKERS SHALL BE INSTALLED AT ALL BENDS AND EVERY 200' ALONG THE HOME RUN (TURF CABLE MARKER)

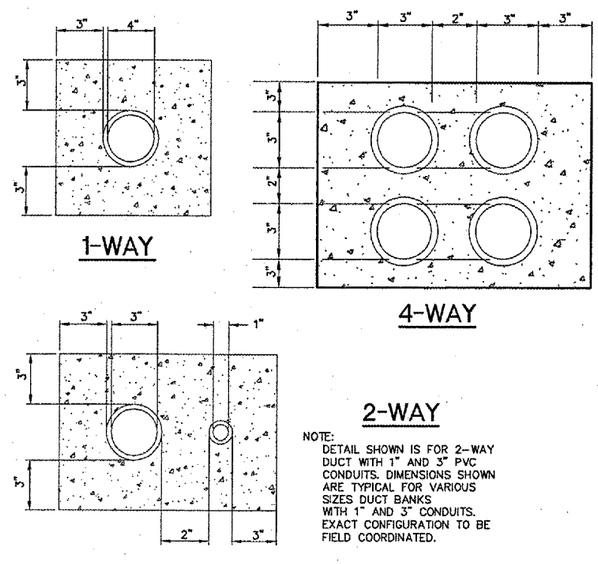

NOTE:
DETAIL SHOWN IS FOR 2-WAY DUCT WITH 1" AND 3" PVC CONDUITS. DIMENSIONS SHOWN ARE TYPICAL FOR VARIOUS SIZES DUCT BANKS WITH 1" AND 3" CONDUITS. EXACT CONFIGURATION TO BE FIELD COORDINATED.

CONCRETE ENCASED DUCTS

NOT TO SCALE

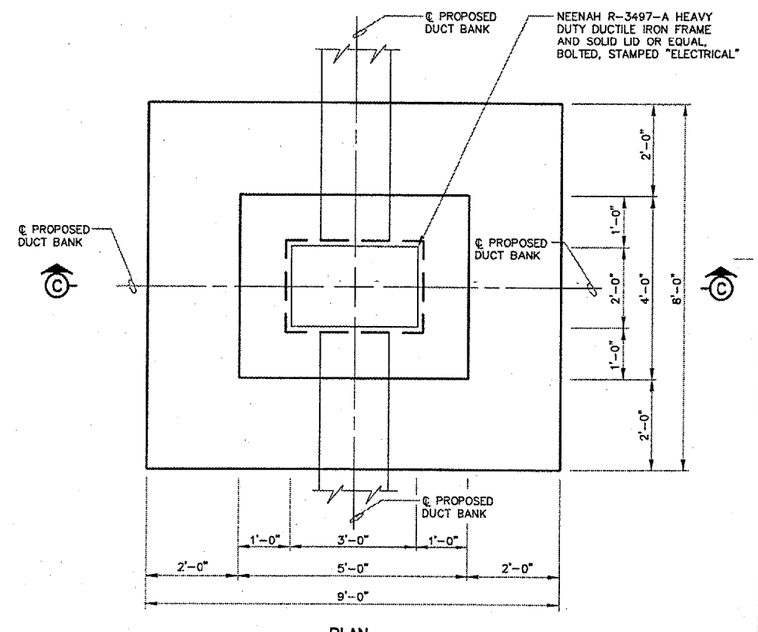

PLAN

NOT TO SCALE

R0011

CMT
CRAWFORD, MURPHY & TILLY, INC.
CONSULTING ENGINEERS
©Copyright CMT, Inc.

Northwest Chicagoland International Airport

Rockford, Illinois

Greater Rockford Airport Authority

AIP: 3-17-0088-XX
RFD-3507

NW Air Cargo Sitework (Phase 2)

Revisions

No.	Date	Description

0 1
THIS BAR IS EQUAL TO 1" AT FULL SCALE (17 X 11).

DESIGN BY:	DLP
DRAWN BY:	CMT
CHECKED BY:	DLP
APPROVED BY:	DLP
DATE:	6.10.2005
JOB No:	05258-06-00

ELECTRICAL DETAILS 2

15 (ELD2)

SHEET 15 OF 25 SHEETS