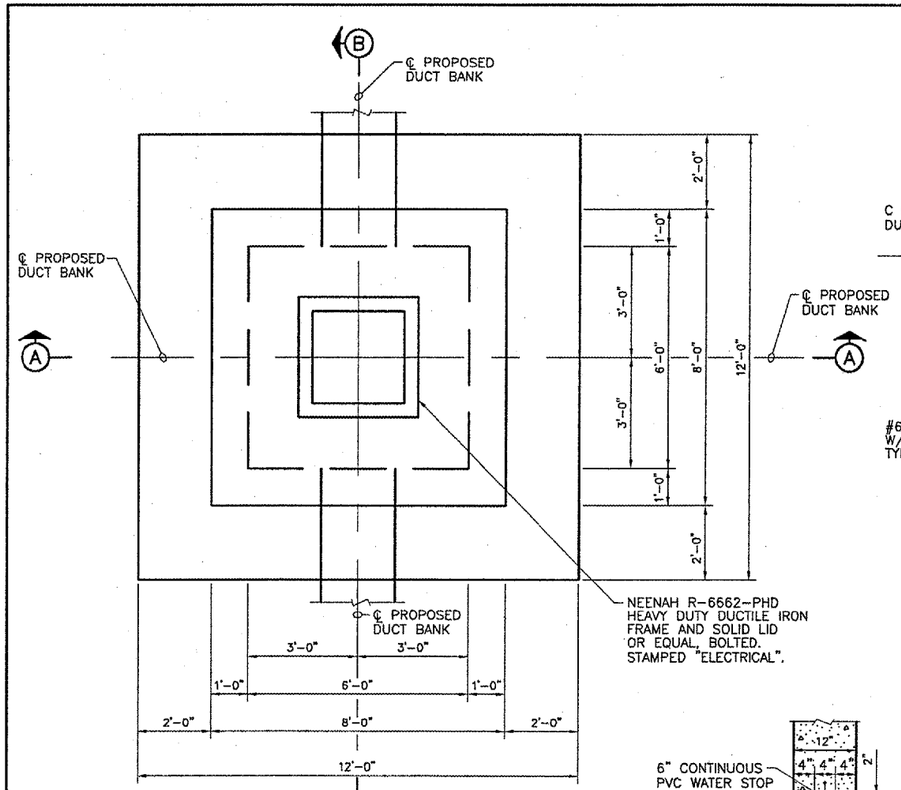

PLAN VIEW
1/2 " = 1'-0"

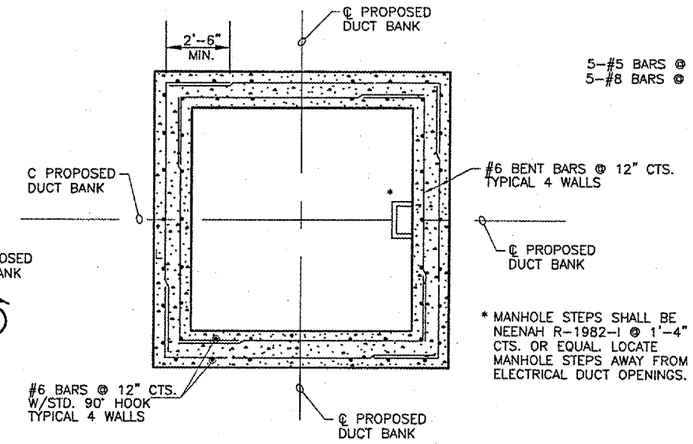

* MANHOLE STEPS SHALL BE NEENAH R-1982-I @ 1'-4" CTS. OR EQUAL. LOCATE MANHOLE STEPS AWAY FROM ELECTRICAL DUCT OPENINGS.

WALL REINFORCEMENT PLAN
1/2 " = 1'-0"

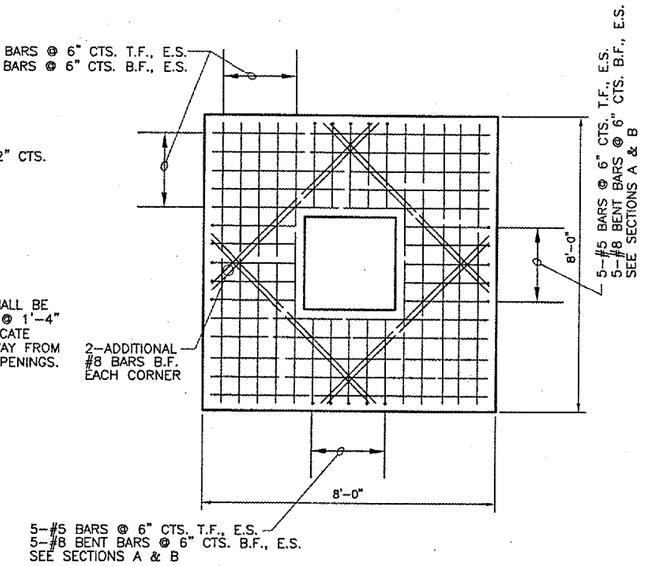

TOP SLAB PLAN SHOWING REINFORCEMENT
1/2 " = 1'-0"

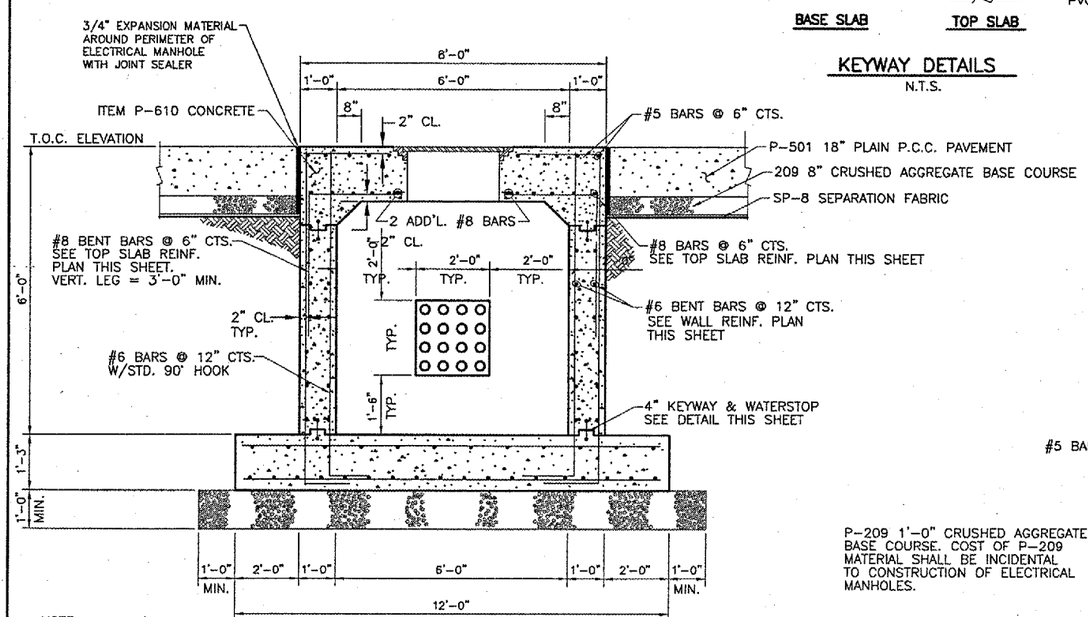

NOTE:
CONTRACTOR SHALL PROVIDE CABLE RACKS AND PULL BARS.

SECTION (A)
N.T.S.

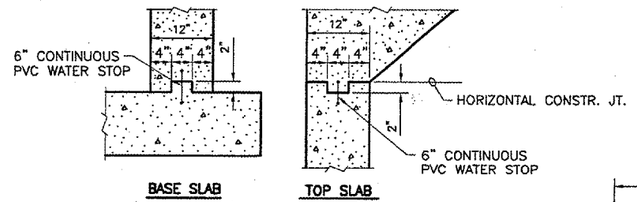

KEYWAY DETAILS
N.T.S.

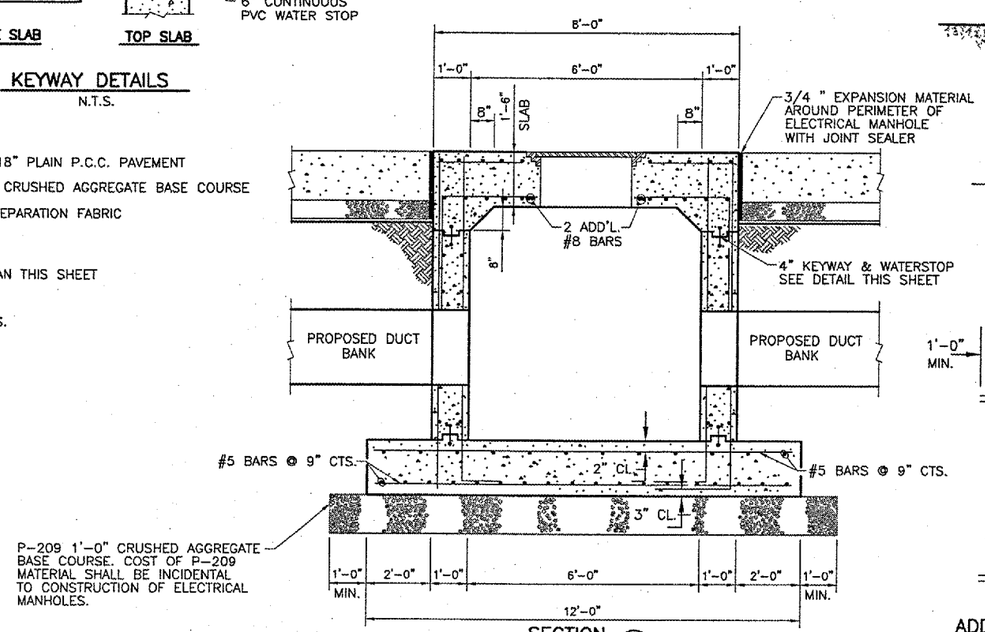

SECTION (B)
N.T.S.

PROPOSED TYPE-2 HANDHOLE

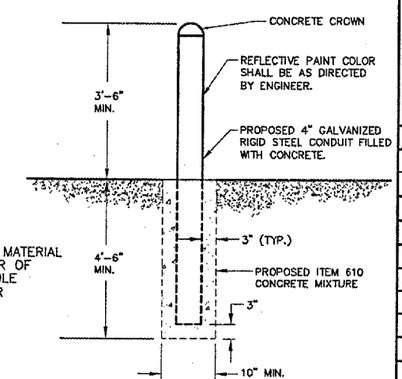

CONCRETE BOLLARDS
N.T.S.

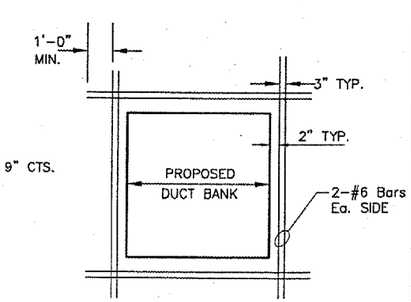

ADDITIONAL REINFORCEMENT AROUND DUCT BANK OPENINGS
N.T.S.

R0011

CMT
CRAWFORD, MURPHY & TILLY, INC.
CONSULTING ENGINEERS
©Copyright CMT, Inc.

Northwest Chicagoland International Airport

Rockford, Illinois

Greater Rockford Airport Authority

AIP: 3-17-0088-XX
RFD-3507

NW Air Cargo Sitework (Phase 2)

Revisions

No.	Date	Description

0 — 1
THIS BAR IS EQUAL TO 1" AT FULL SCALE (17 X 11).

DESIGN BY:	DLP
DRAWN BY:	CMT
CHECKED BY:	DLP
APPROVED BY:	DLP
DATE:	8.10.2005
JOB No:	05258-06-00

ELECTRICAL DETAILS 3

16 (ELD3)