VALVE INSTALLATION

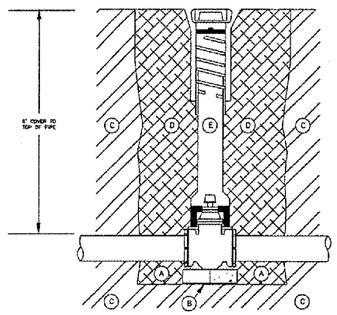

ITEM	DESCRIPTION
A	APPROVED BEDDING MATERIAL
B	16"x 8"x 4" CONCRETE BLOCKING
C	UNDISTURBED SOIL
D	APPROVED GRANULAR, TRENCH BACKFILL MATERIAL
E	VALVE BOXES WILL BE THE TYLER / UNION CAST IRON 6850 SERIES- WITH DEBRIS CAP & ADAPTER II INSTALLED

WDTL-VB

VALVE & VALVE BOX DETAIL

NOT TO SCALE

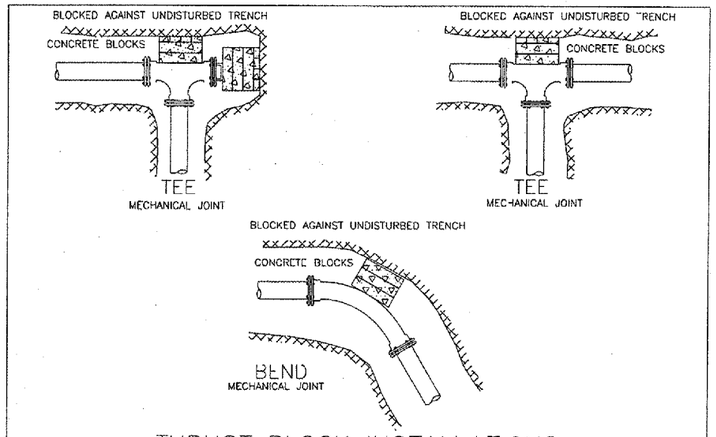

WDTL-THBK

THRUST BLOCK INSTALLATIONS

NOT TO SCALE

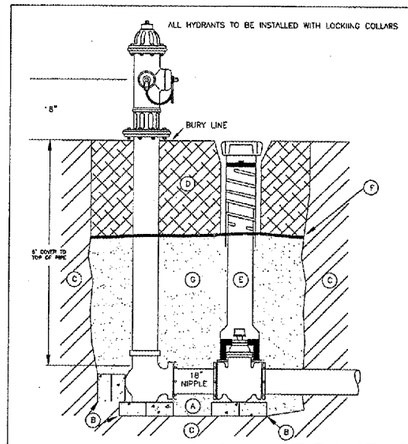

ITEM	DESCRIPTION
A	APPROVED BEDDING MATERIAL
B	16"x 8"x 4" CONCRETE BLOCKING
C	UNDISTURBED SOIL
D	APPROVED GRANULAR, TRENCH BACKFILL MATERIAL
E	VALVE BOXES WILL BE THE TYLER / UNION CAST IRON 6850 SERIES- WITH DEBRIS CAP & ADAPTER II INSTALLED
F	A WATER PERMEABLE GEOTEXTILE IS TO BE PLACED BETWEEN 1" WASHED STONE AND BACKFILL
G	VALVE AND HYDRANT TO BE BACK FILLED WITH- 1" WASHED STONE MINIMUM OF 24 INCHES IN DEPTH

WDTL-FH

FIRE HYDRANT COMPLETE

NOT TO SCALE

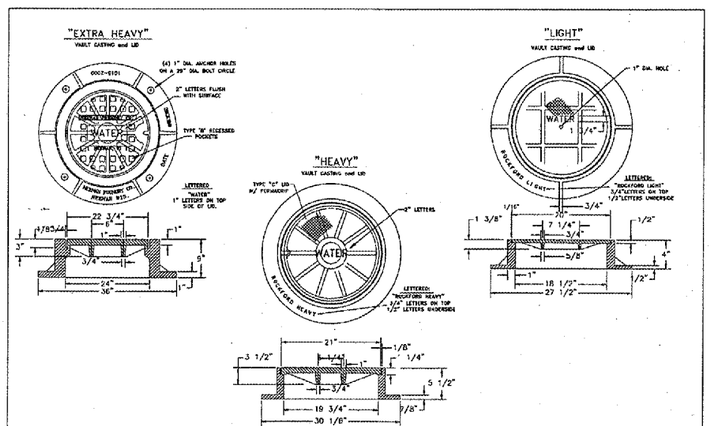

WDTL-CAST

WATER MANHOLE CASTING DETAIL

NOT TO SCALE

NOTES:

1. THE CONTRACTOR SHALL INSURE THAT ALL TRENCHING OPERATIONS CONFORM TO THE LATEST OSHA REGULATIONS.
2. PIPE BEDDING MATERIAL AND GRANULAR BACKFILL MATERIAL SHALL BE THE SAME AS TRENCH BACKFILL MATERIAL.
3. GRANULAR BACKFILL AND BEDDING MATERIAL SHALL BE INCIDENTAL TO THE CONTRACT.
4. TRENCH BACKFILL MATERIAL SHALL BE COMPACTED AT A MAXIMUM OF 12" INCREMENTS.
5. APPROVED EXCAVATED MATERIAL SHALL MEET THE REQUIREMENTS OF ARTICLE 1003.04 OF THE LATEST EDITION OF THE STANDARD SPECIFICATIONS FOR ROAD AND BRIDGE CONSTRUCTION. NO COMPENSATION WILL BE ALLOWED AS TRENCH BACKFILL FOR THE PORTION OF THE TRENCH BACKFILLED WITH EXCAVATED MATERIAL.
6. AGGREGATE (FA20/FA21) WILL NOT BE ALLOWED FOR TRENCH BACKFILL MATERIAL.

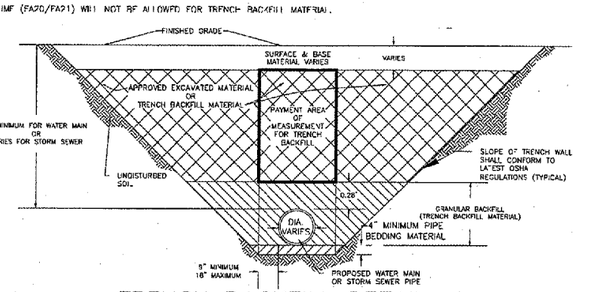

Dtl-Trench Backfill.dwg

TRENCH BACKFILL DETAIL

Revised: 01/22/02 (DCH)

VALVE VAULT INSTALLATION

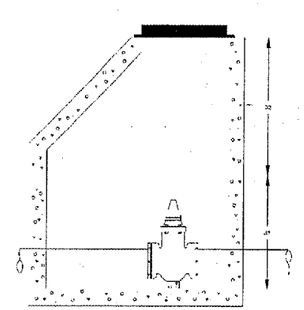

DOGHOUSE BLOCKING

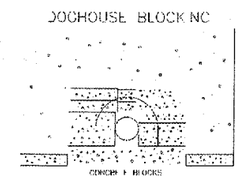

WDTL-VV

VALVE & VAULT DETAIL

NOT TO SCALE

R0011

CMT
CRAWFORD, MURPHY & TILLY, INC.
CONSULTING ENGINEERS
© Copyright CMT, Inc.

Northwest Chicagoland International Airport

Rockford, Illinois

Greater Rockford Airport Authority

AIP: 3-17-0088-XX
RFD-3507

NW Air Cargo Sitework (Phase 2)

Revisions

No.	Date	Description

0 1
THIS BAR IS EQUAL TO 1" AT FULL SCALE (17 X 11).

DESIGN BY:	JGP
DRAWN BY:	CMT
CHECKED BY:	DLP
APPROVED BY:	DLP
DATE:	6.10.2005
JOB No:	05258-06-00

UTILITY DETAILS

18 (UTD1)