F.A.P. RTE.	SECTION	COUNTY	TOTAL SHEETS	SHEET NO.
840	143 N	WILL	121	17
STA.		TO STA.		
FED. ROAD DIST. NO. 1		ILLINOIS	FED. AID PROJECT	

CONTRACT NO. - 60445

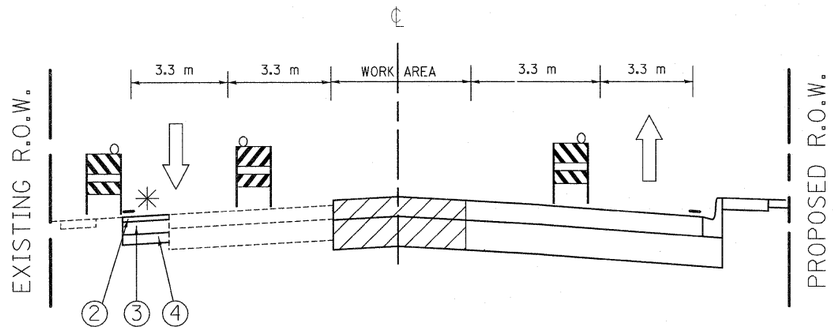

STA. 1+160 TO STA. 1+260

STAGE II

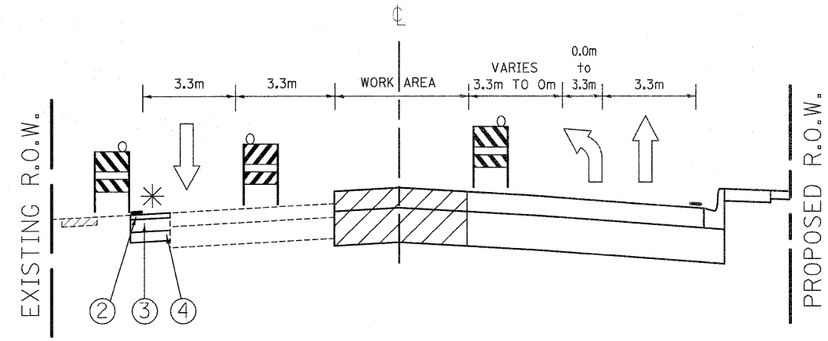

STA. 1+375 TO STA. 1+455

STAGE II

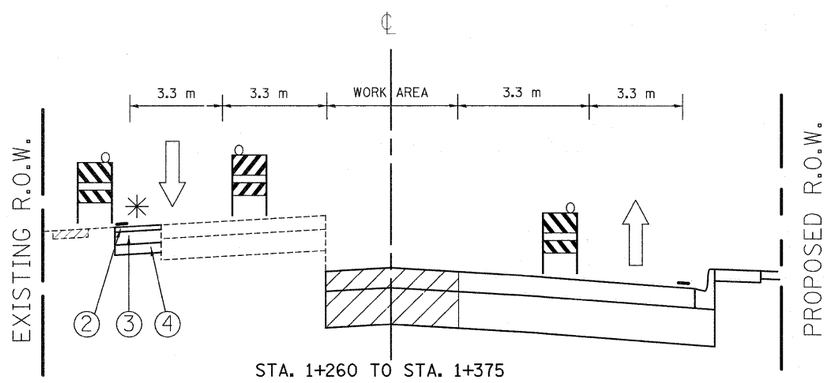

STA. 1+260 TO STA. 1+375

STAGE II

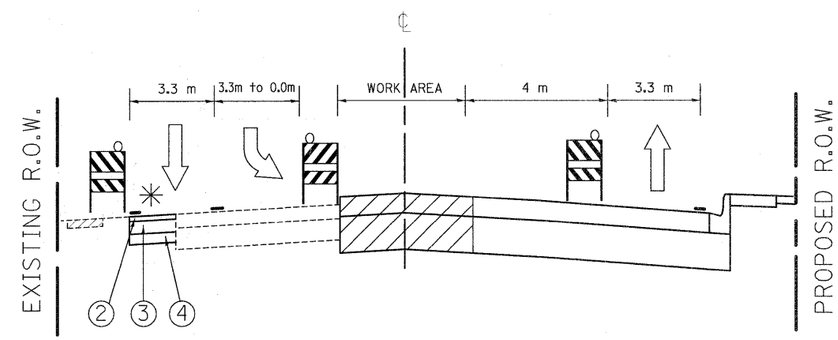

STA. 1+455 TO STA. 1+600

STAGE II

✳ TEMPORARY WIDENING

(1) EARTH WORK EXCAVATION, 258 mm ($10^1/_4$")

(2) HMA SURFACE COURSE, MIX "D", N50, 38 mm ($1^1/_2$")

(3) HMA BINDER, IL-19, N70, 120 mm (4.75")

(4) SUB-BASE GRANULAR MATERIAL, TYPE B, 200 mm (4")

NOTE: WIDTH VARIES (1M TO 1.75M)

REVISIONS	
NAME	DATE

ILLINOIS DEPARTMENT OF TRANSPORTATION

IL-50

TYPICAL CROSS SECTIONS FOR SUGGESTED CONSTRUCTION STAGING

STAGE II

SCALE: DRAWN BY

DATE: 5/11/2011 CHECKED BY

5/11/2011
c:\pw_work\pwidot\bauerdl\d0240503\P102397-stage1.dgn
bauerdl