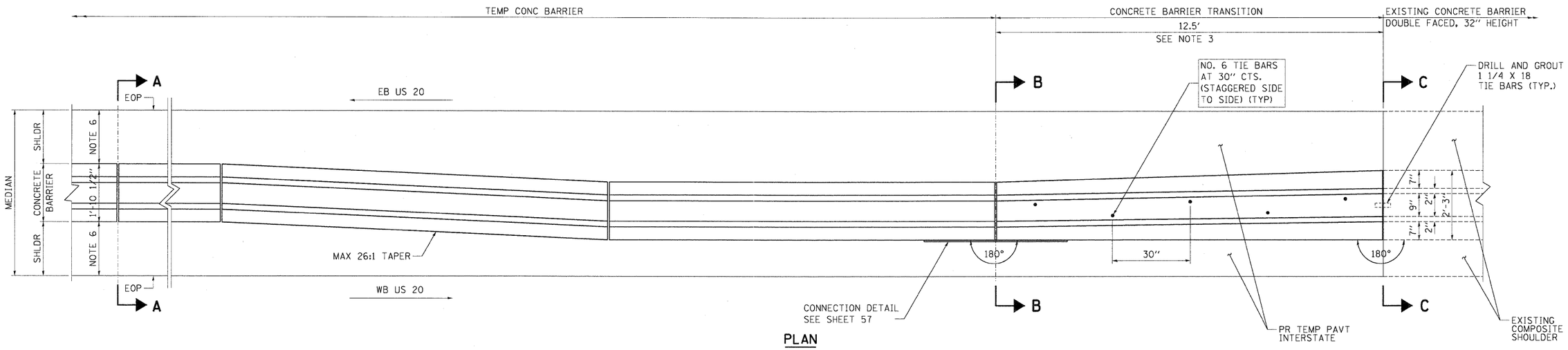

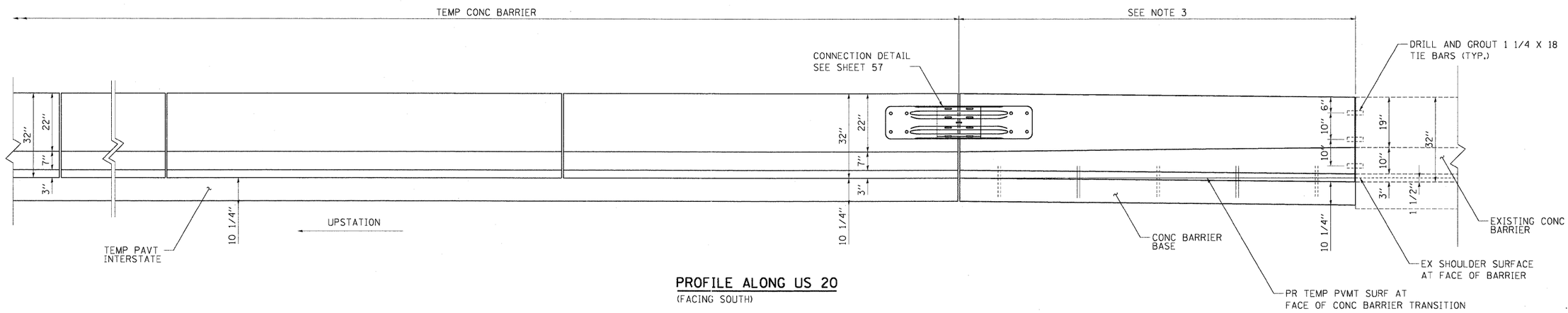

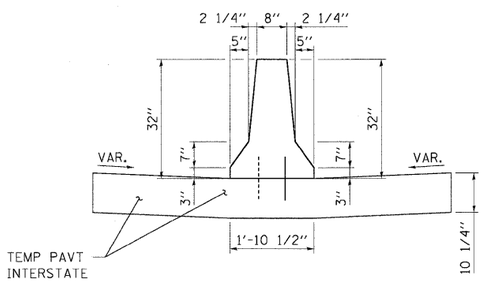

SECTION A-A

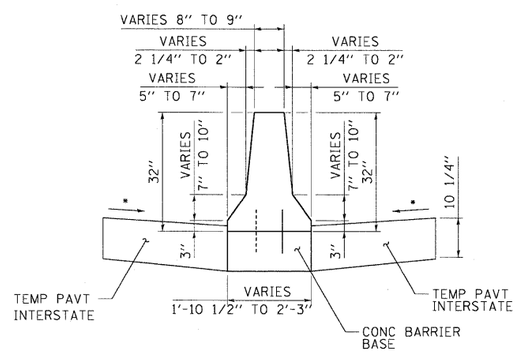

SECTION B-B

* MATCH EXISTING CROSS SLOPE AT SECTION C-C

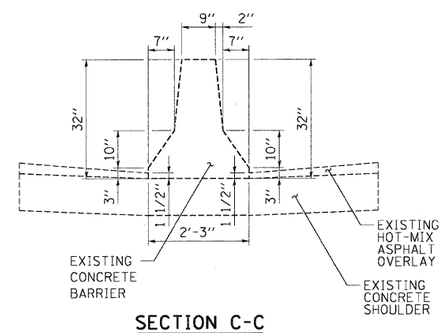

SECTION C-C

NOTES:

1. FOR ADDITIONAL SHOULDER DETAILS, SEE TYPICAL SECTIONS.
2. FOR ADDITIONAL CONCRETE BARRIER, DOUBLE FACE, 32" HEIGHT DETAILS SEE STANDARD 637001.
3. THE CONTRACTOR SHALL VERIFY THE DIMENSIONS OF THE EXISTING CONCRETE BARRIER AND THE LENGTH OF THE TRANSITION, AND SHALL SUBMIT ANY NECESSARY REVISIONS TO THE CONCRETE BARRIER TRANSITION THAT ARE REQUIRED TO MATCH THE EXISTING BARRIER TO THE ENGINEER FOR APPROVAL PRIOR TO CONSTRUCTING THE TRANSITION. THE MAXIMUM LENGTH OF THE TRANSITION SHALL BE 12.5 FEET.
4. ALL REINFORCING BARS, BAR SPLICERS, TIE BARS, AND DOWEL BARS SHALL BE SEATED IN THE FINAL POSITION PRIOR TO THE CONCRETE OPERATIONS. BARS SHALL NOT BE MUCKED INTO PLACE.
5. THE COST OF FURNISHING AND PLACING TIE BARS AND DOWEL BARS SHALL BE INCLUDED IN THE CONTRACT UNIT PRICE FOR "CONCRETE BARRIER TRANSITION."
6. CENTER THE TEMPORARY CONRETE BARRIER WITHIN MEDIAN.

FILE NAME = $FILEL$	USER NAME = $USER$	DESIGNED - DDH	REVISED -	STATE OF ILLINOIS DEPARTMENT OF TRANSPORTATION FAP ROUTE 345 / US ROUTE 20	ROADWAY DETAIL CONCRETE BARRIER TRANSITION	F.A.P RTE. 345	SECTION 8R-HB-2-BY-1	COUNTY KANE	TOTAL SHEETS 434	SHEET NO. 58
TENG TENG & ASSOCIATES, INC. ENGINEERS/ARCHITECTS/PLANNERS CHICAGO, ILLINOIS	PLOT SCALE = $SCALE$	DRAWN - JFS	REVISED -					CONTRACT NO. 60K90		
	PLOT DATE = $DATE$	CHECKED - DDH	REVISED -		SCALE: SHEET NO. OF SHEETS STA. TO STA.	FED. ROAD DIST. NO.	ILLINOIS	FED. AID PROJECT		
		DATE - 05/18/11	REVISED -							

..\D160K90-BORDER01.DGN 5-12-2011, 16:05:57 HAYWARMZ \\FS-0044\AM\VAULT_D-TRANS_07\2202\21379-001\CIVIL\CAD\60K90\SHEET\D160K90-SHT-ROADDETU01.DGN