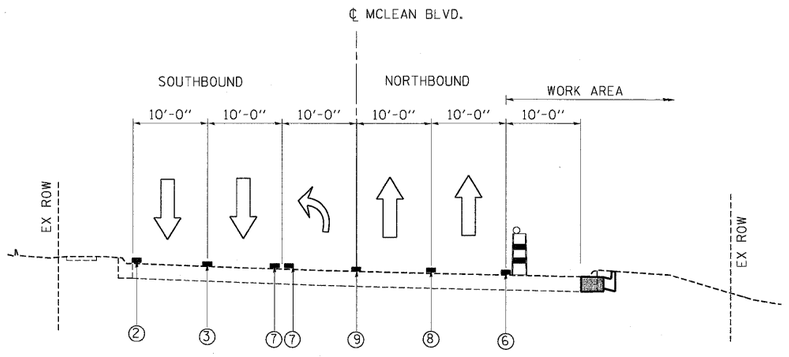

STAGE I
MCLEAN BLVD.
FLEETWOOD DRIVE TO SPARTAN DRIVE

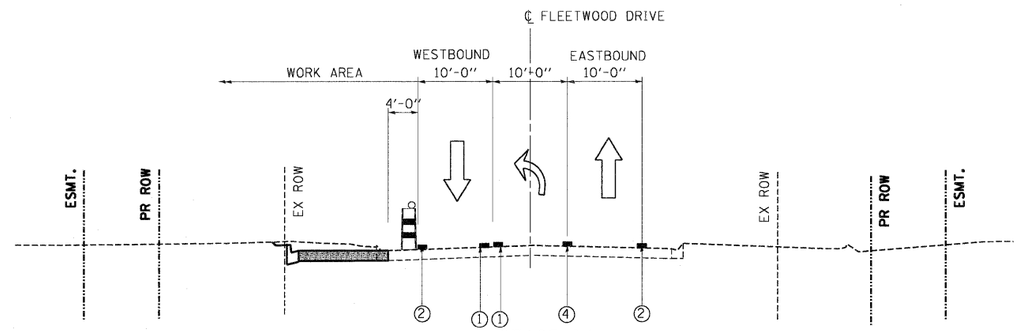

STAGE I.1
FLEETWOOD DRIVE
MCLEAN BLVD. TO SHEPARD DRIVE

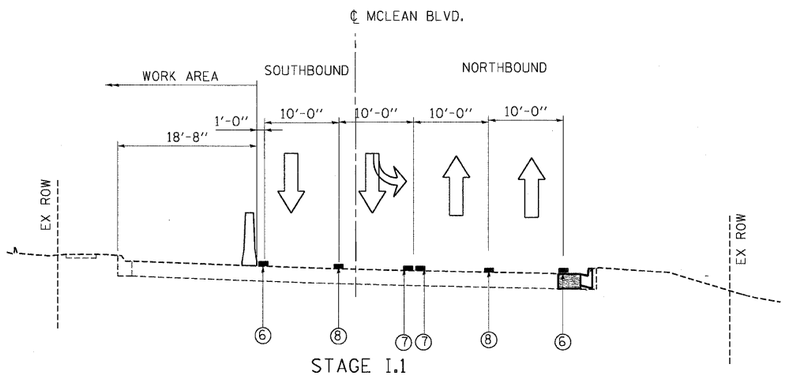

STAGE I.1
MCLEAN BLVD.
FLEETWOOD DRIVE TO SPARTAN DRIVE

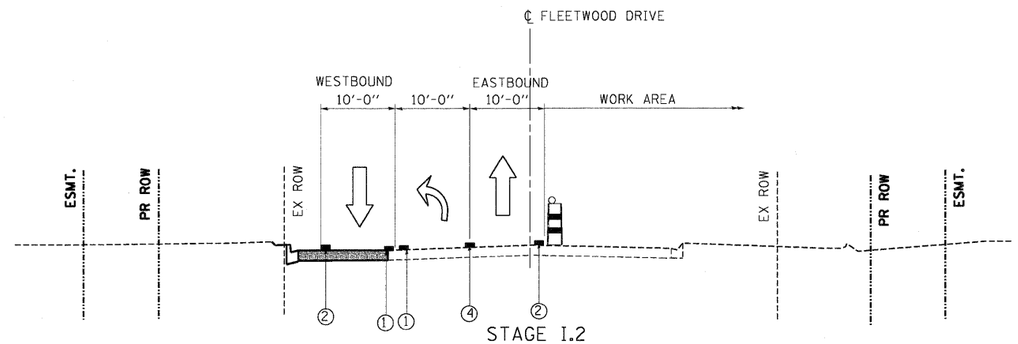

STAGE I.2
FLEETWOOD DRIVE
MCLEAN BLVD. TO SHEPARD DRIVE

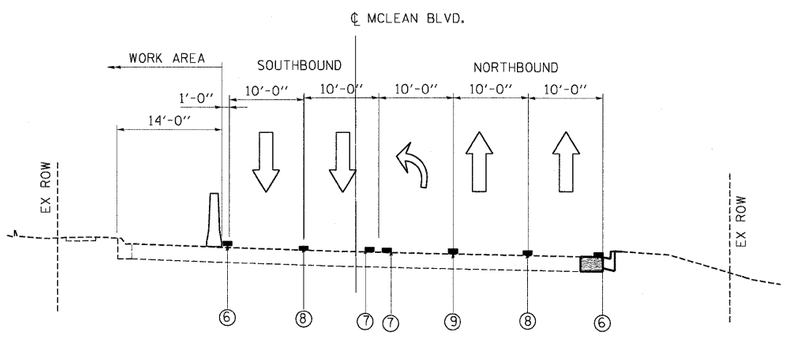

STAGE I.2
MCLEAN BLVD.
FLEETWOOD DRIVE TO SPARTAN DRIVE

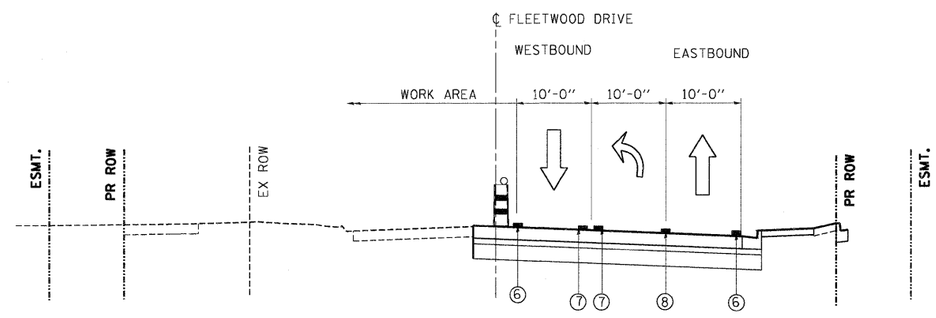

STAGE I.3
FLEETWOOD DRIVE
MCLEAN BLVD. TO SHEPARD DRIVE

LEGEND

- TEMPORARY CONCRETE BARRIER
- VERTICAL PANELS WITH FLASHING LIGHT
- DRUM OR BARRICADE WITH FLASHING LIGHT
- TRAFFIC FLOW
- TEMPORARY PAVEMENT

1. TEMP. PVMT. MARKING - LINE 4" YELLOW
2. TEMP. PVMT. MARKING - LINE 4" WHITE
3. TEMP. PVMT. MARKING - LINE 4" WHITE (10' DASH - 30' SKIP)
4. TEMP. PAVMT. MARKING- LINE 6" WHITE
5. TEMP. PAVT. MARKING - LINE 6" WHITE (2' DASH - 6' SKIP)
6. WET REFLECTIVE TEMP. TAPE TYPE III - LINE 4" WHITE
7. WET REFLECTIVE TEMP. TAPE TYPE III - LINE 4" YELLOW
8. WET REFLECTIVE TEMP. TAPE TYPE III - LINE 4" WHITE (10' DASH - 30' SKIP)
9. WET REFLECTIVE TEMP. TAPE TYPE III - LINE 6" WHITE

..\D160K90-XSCSTI.DGN ..\D160K90-BORDER01.DGN ..\D160K90-LEGEND.DGN
5-12-2011,16:06:21 HAYWARMZ \\FS-0044\ARKVAULT\D-TRANS.07\2202\21371-001\CIVIL\CAD\160K90\SHEET\D160K90-SHT-STAGING103.DGN

FILE NAME = $FILEL$	USER NAME = $USER$	DESIGNED - MM	REVISED -	STATE OF ILLINOIS DEPARTMENT OF TRANSPORTATION FAP ROUTE 345 / US ROUTE 20	STAGING AND TRAFFIC CONTROL MCLEAN BOULEVARD AND FLEETWOOD DRIVE TYPICAL SECTIONS STAGE I
		DRAWN - MM	REVISED -		
TENG & ASSOCIATES, INC. ENGINEERS/ARCHITECTS/PLANNERS CHICAGO, ILLINOIS	PLOT SCALE = $SCALE$	CHECKED - PB	REVISED -		
	PLOT DATE = $DATE$	DATE - 05/18/11	REVISED -		SCALE: 1"=10' SHEET NO. OF SHEETS STA. TO STA.

F.A.P RTE.	SECTION	COUNTY	TOTAL SHEETS	SHEET NO.
345	8R-HB-2-BY-1	KANE	434	79
		CONTRACT NO. 60K90		
FED. ROAD DIST. NO.	ILLINOIS	FED. AID PROJECT		